3 1761 06705282 9

UNIV.OF
TORONTO
LIBRARY

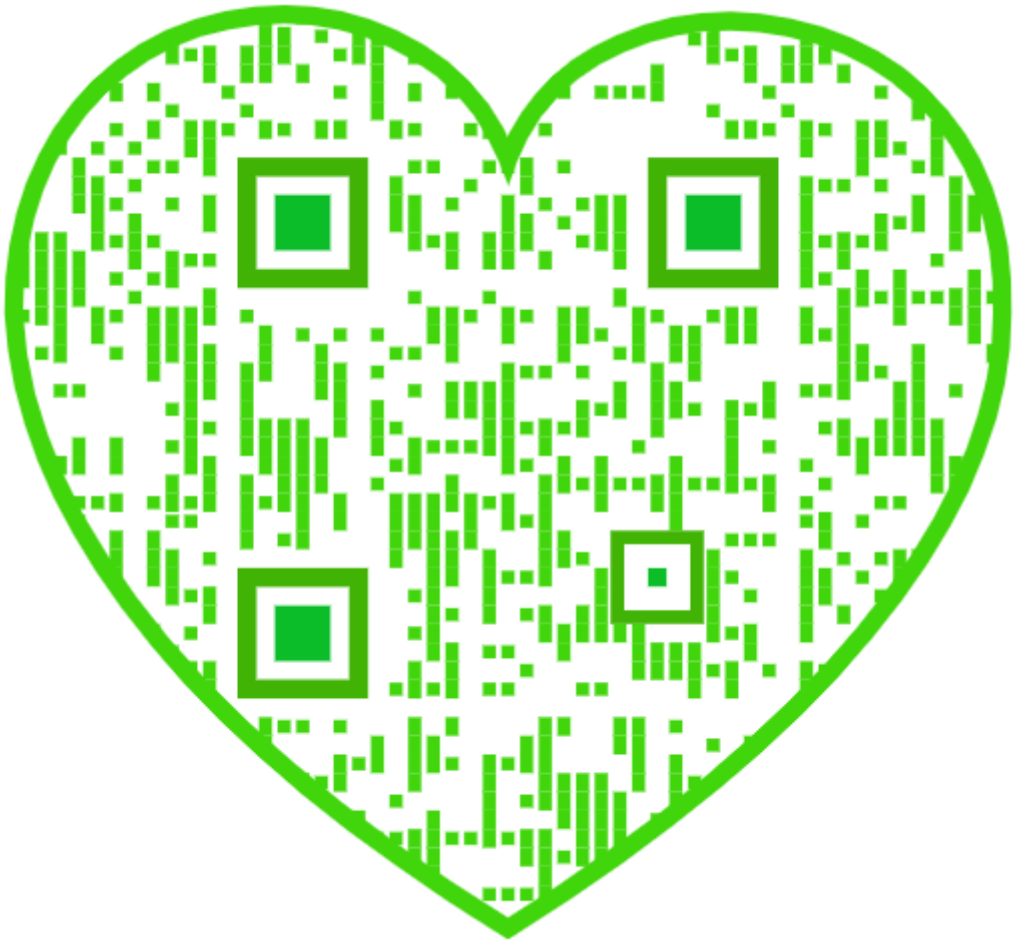

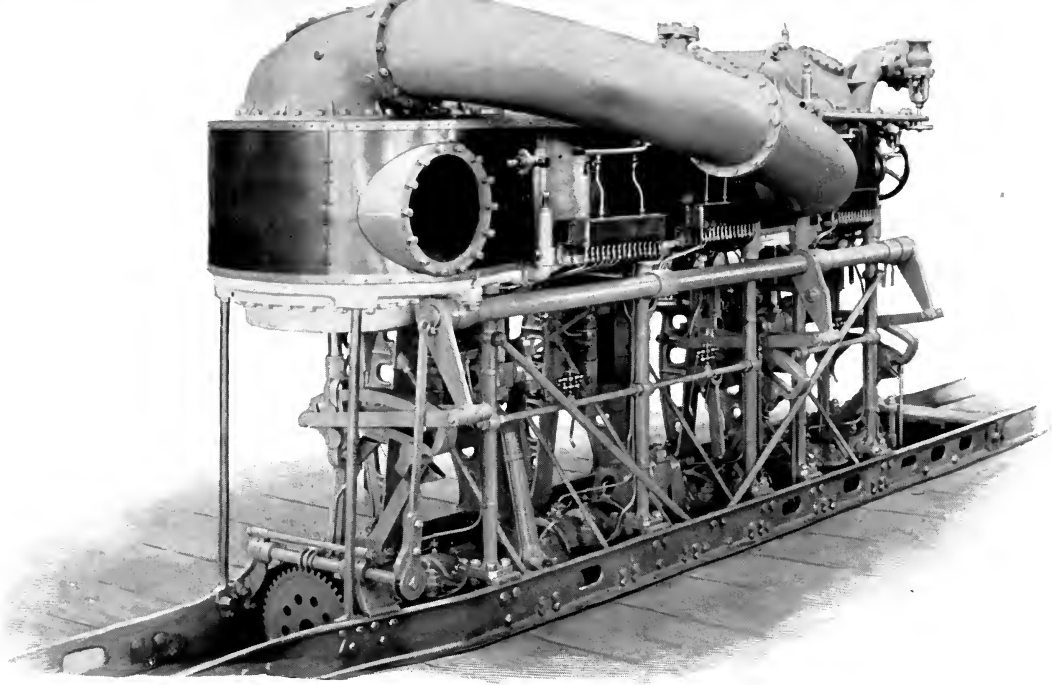

ENGINES OF H.M.S. "SALMON," TORPEDO BOAT DESTROYER.

Built by EARLE'S S. & E. Co., HULL, from the designs of the Author, 1895.

TE
S

A MANUAL

OF

MARINE ENGINEERING:

COMPRISING

THE DESIGNING, CONSTRUCTION, AND WORKING OF MARINE MACHINERY.

BY

A. E. SEATON,

LECTURER ON MARINE ENGINEERING TO THE ROYAL NAVAL COLLEGE, GREENWICH,
MEMBER OF THE INSTITUTION OF CIVIL ENGINEERS,
MEMBER OF COUNCIL OF THE INSTITUTION OF NAVAL ARCHITECTS, MEMBER
OF THE INSTITUTION OF MECHANICAL ENGINEERS, ETC.

With Numerous Tables and Illustrations reduced from Working Drawings.

THIRTEENTH EDITION, REVISED THROUGHOUT AND ENLARGED.

LONDON: CHARLES GRIFFIN & COMPANY, LIMITED;
EXETER STREET, STRAND.
NEW YORK: D. VAN NOSTRAND COMPANY,
23 MURRAY STREET AND 27 WARREN STREET.
1896.

107777
11. 1. 11

Digitized by the Internet Archive
in 2007 with funding from
Microsoft Corporation

http://www.archive.org/details/manualofmarineen00seatuoft

PREFACE TO THE TWELFTH EDITION.

SINCE the *Manual of Marine Engineering* was written and first published, there have been many and extensive changes in marine engineering practice, due in great measure, if not entirely, to the supply of mild steel at a low price—so low, indeed, that now it is quite as cheap as common iron.

In 1880, the triple compound engine was little more than a dream; in fact, there were then many people who believed in, and continued to use, the ordinary expansive engine. The highest boiler pressure used by advanced and enterprising engineers was 100 lbs. per square inch, and few of them had ventured even so far as that. Steel crank-shafts, and other heavy forgings made of steel, were looked upon as luxuries to be indulged in only by the British and Foreign Governments, and wealthy corporations. At the present time ingot steel forgings are common enough, and not very much dearer than iron ones. Engines with three cranks were few and far between, and generally limited to very large compound engines, in which a single low-pressure cylinder would have been abnormally large. To-day, most of the ships recently built have engines with three cranks, and even tug boats and other small steamers are generally fitted with three-crank triple engines, while larger vessels not infrequently have four-crank triple and quadruple engines.

In 1880, the torpedo boat, with its machinery, was looked upon as a toy, possibly useful enough in warfare, but not fit to stand the rough usage of everyday work; but the torpedo boat designer was really the pioneer to show the path that the marine engineer was to tread on his way to produce high-speed steamers of all kinds and of every size, from the huge cruiser to the small Channel passenger steamer. The possibilities of the

marine engineer have been just recently exhibited in the development of the torpedo boat destroyer, and thereby a new practice evolved that the older engineers would have beheld with horror, viz. :—The constructing of machinery to attain a very high power on the least possible weight by working with a very low factor of safety; but bearing in mind that the high stress on the material is of short duration and at long intervals, while the factor of safety when working generally is by no means low, there is little need for doubt.

Most of these changes in engineering practice were gradually introduced, so that it was not difficult, by slight emendations and additions, to bring the book up to date at the issue of each new edition; but other changes have been more rapid, so that, in the present edition, the author has felt it necessary to cut out much that is now only of historical interest, and to add new matter dealing with the changed condition of affairs. Further, no inconsiderable portion of the book has had to be re-written for the same purpose. An entire new chapter on the Water-tube Boiler has been added, as the author believes that the present is an opportune time for dealing with this important subject, since that which hitherto had been rather matter for experiment has now become an assured success for the purpose required.

The author trusts that this new edition may receive from the engineering world the same kindly consideration and appreciation shown to the previous ones, and that it may be found equally useful.

A. E. SEATON.

HULL, *May, 1895.*

PREFACE.

THE following Work has been prepared to supply the existing want of a Manual showing the application of Theoretical Principles to the Design and Construction of Marine Machinery, as determined by the experience of leading Engineers, and carried out in the most recent successful practice. The data on which it is based, now first thrown into form for publication, have been collected during many years of study and practical work. It is hoped that the volume will be found useful by the Engineer and Draughtsman engaged in practice, as a Handbook of Reference, and by the Student, launched for the first time on the intricacies of Marine Construction, as a guide supplying to some extent his lack of experience.

The Rules and Formulæ introduced (which have been divested as far as possible of complexity, and given in the simplest form attainable) may be used by any one who designs with some regard to theory, and, by varying the constants, be made to suit his own ideas of strength and stiffness. It may, perhaps, be thought by some that in certain instances details have been entered into with unnecessary minuteness; but it should be remembered, on the other hand, that not every engineer has the contents of a well filled drawing-office to fall back upon in cases of doubt and difficulty.

It is hardly necessary to premise that it is wholly impossible to reconcile the practice of the Naval Designer, who thinks more of efficiency and weight than of cost, with that of the Mercantile

Engineer, who studies efficiency and cost, with but small regard to weight, and, therefore, few rules can be given which shall absolutely suit both. However, the manufacturer of machinery for the Merchant Service might follow with advantage much that has been proved to be good in Naval practice, and the Naval Authorities might again, on their part, borrow from the Mercantile Marine a few suggestions which would render a war-ship, while no less efficient than at present, perhaps somewhat less intricate for those who have to work her.

In conclusion, the author can but express a hope that the publication of these Notes, imperfect as they necessarily are, may tend to make a little clearer some of the technicalities of Marine Design and Construction, and so help forward, in however slight a degree, the application of scientific investigation to those problems which the Marine Engineer is called upon, day by day, to solve.

HULL, *January 30th*, 1883.

GENERAL CONTENTS.

Chapter I.—General Introduction.

	Page
Projection of a Mass of Water,	1
Paddle-wheel,	1
The Screw Propeller,	2
The Jet Propeller,	2
Reversal of a Ship's Motion,	2
The Beam Engine: Application of it for Marine Propulsion,	3
The Steeple Engine,	5
The Oscillating Engine,	5
The Diagonal or Inclined Direct-Acting Engine,	6
The Screw Engine: its History and Development,	9
The Vertical Direct-Acting Engine,	11
The Horizontal Direct-Acting Engine,	14
Penn's Trunk Engine,	14
The Return Connecting-Rod Engine,	17

Chapter II.—Horse-Power, Nominal and Indicated, and the Efficiency of the Engine.

The Origin of the Expression "*Nominal*" Horse-Power, and how it is generally calculated,	21
"*Indicated*" Horse-Power: Definition of, and how obtained,	25
The Indicator-Diagram, and how to calculate the Mean Pressure from it,	25
Mean Pressure,	25
The Efficiency of the Engine: (i.) As a Heat Engine,	28
The Steam and Ether Engine,	29
Steam of High Pressure: its Advantages and Disadvantages,	30
The Efficiency of the Engine: (ii.) As a Machine,	32
The Friction of the Piston,	32
The Friction of the Stuffing-Boxes,	33
The Friction of the Guides and Slides,	33
The Loss from Friction at the Shaft Journals,	34
The Friction of the Valve Motions and Valves,	35
The Loss from the Pumps,	36
The Loss from the Inertia of the Moving Parts,	36
The Efficiency of the Engine: (iii.) The Losses due partly to Mechanical Defects and partly to Physical Causes,	37

Chapter III.—Resistance of Ships and Indicated Horse-Power necessary for Speed.

The Value of Trial Trips,	41
The Resistance of a Ship passing through the Water,	41
Two-fold Resistance of the Water,	42
Speed Formulæ,	43
Constants for Use with Speed Formulæ,	43
The Co-efficient of Fineness for determining the General Form of a Ship,	45
Professor Rankine's Method of calculating Resistance,	46
Kirk's Analysis for determining the General Form of a Ship and calculating the Wetted Surface,	48
To find the Indicated Horse-Power from the Wetted Surface,	50
Progressive Speed Trials and Construction of Curves,	52
Results of Trials of Steamships Analysed,	54
The Sea Performance of Steamers, how affected	57

Chapter IV.—Space Occupied by, and General Description of, Modern Marine Machinery.

	Page		Page
The Space occupied by Machinery,	58	The Single-crank Compound Engine,	63
The Length and Breadth of Paddlewheel Engines,	59	The Two-Cylinder Two Crank Engine,	65
The Screw Engine: Conditions determining its Size,	60	Variations in the Design of Engines,	65
The Length and Breadth of various Screw Engines,	60	The Three-Cylinder Engines,	71
Diagonal Screw Engines: Special Features of,	62	The Four-Cylinder or Tandem Engines,	74
The Inverted Direct-Acting Engine,	63	The Six-Cylinder Engine,	76

Chapter V.—Engines, Simple and Compound.

An Elementary Engine,	77	Relative Consumption of Fuel in the Simple and Compound Engine,	89
The Origin of the Compound Engine,	77	The Ratio of Cylinder Capacity of the Compound Engine,	91
The Expansive Engine,	77	The Comparative Efficiency of Three-Cylinder Compound Engines,	93
The Effects of Increase of Pressure,	78	The Triple Expansion Compound Engine,	94
The Progress made by Early Marine Engineers,	79	Triple Expansion Engines,	96
A Comparison of the Results obtained by them,	80	Mean Pressure in a Triple Expansion Engine,	102
The Receiver Form of Compound Engine,	81	Arrangement of Cylinders of a Triple Expansion Engine,	106
The Expansive and Compound Engines compared,	82	Quadruple Expansion Engines,	108
The Effect of "Drop" in the Receiver,	83	The Quadruple Compound Engine,	111
The Division of Work between the Cylinders,	83	The Ratio of Cylinder Capacity as found in Actual Practice.	112
The Direct Expansion Compound Engine,	83	Compound Engine having Three Low-Pressure and One High-Pressure Cylinders,	115
The Requisites in the Marine Engine,	85		
Comparative Efficiency of the various kinds of Marine Engine,	86		

Chapter VI.—Expansion of Steam, Mean Pressure, &c.

The Mean Pressure depends on the Initial Pressure and the Rate of Expansion,	117	Mean Pressure in a Three-Cylinder Compound Engine,	128
The Graphic Method of finding the Mean Pressure,	119	Mean Pressure in a Triple-Expansion Compound Engine,	129
Dry Steam, to calculate the Mean Pressure of,	119	Friction of Steam through Pipes and Valves,	132
Clearance,	120	Liquefaction during Expansion,	133
Compression or Cushioning,	120	Mean Pressure as found in Practice,	134
General Effect of Clearance and Cushioning,	122	Practical Method of calculating the Expected Mean Pressure,	137
Mean Pressure in a Compound Engine,	125		

Chapter VII.—Piston Speed, Stroke of Piston, Revolutions, Size of Cylinder, Cylinder Fittings, &c.

	Page
Piston Speed,	138
Revolutions of the Engine,	141
Length of Stroke,	143
The Cylinder, to calculate the Diameter of,	143
The Main Steam Pipe,	147
Area through Stop and Throttle Valves,	147
Steam Ports and Passages,	147
Opening of Port to Steam,	148
Exhaust Passages and Pipes,	148
Cylinder Liner,	149
False Faces of Cylinders,	151
Width of Steam Ports,	151
Piston Valves,	151
Double-Ported Valves,	152
Steam Jackets,	152
Boring Holes,	153
Auxiliary Valves,	153
Escape or Relief Valves,	153
Drain Cocks,	153
Capacity of the Receiver,	154
Column Facings and Feet,	154
Holding-Down Bolts,	154
Horizontal Cylinders,	155
Diagonal Cylinders,	155
Oscillating Cylinders,	155
Cylinder Covers,	156
Cylinder Cover Studs, Rolls, and Flanges,	157
Clearance of the Piston,	157
Valve-Box Doors,	158
Lagging and Clothing of Cylinders,	158
Scantlings of the Cylinders and its Connections,	159
Stuffing-Boxes and Glands,	160

Chapter VIII.—The Piston, Piston-Rod, Connecting-Rod.

Construction of the Piston,	163
Ramsbottom's Packing Rings,	164
Common ,, ,,	164
Piston Springs and Rings,	166
Piston Springs and Rings, Cameron's Patent,	166
Piston Springs and Rings, Mather and Platt's Patent,	167
Piston Springs and Rings, Buckley's Patent,	167
Piston Springs and Rings, Prior's Patent,	167
Piston Springs and Rings, Qualter and Hall's Patent,	167
Piston Springs and Rings, Rowan and MacLaine's Patents,	168
Body of the Piston,	168
Details of the Construction of the Ordinary Piston,	169
The Piston-Rod: Calculations of the Size of,	172
Piston-Rod Ends: Methods of Construction of,	174
Pistons: Back Rods and Trunks of,	176
Piston-Rod Guides,	177
Piston-Rod Crossheads and Gudgeons,	179
Connecting-Rods, Calculations of the Size of,	182
Connecting-Rod Bolts,	184
,, ,, Brasses,	185

Chapter IX.—Shafting, Cranks and Crank Shafts, &c.

Twisting Moment on a Shaft,	187
Resistance to Twisting,	187
Bending Moment on a Shaft,	189
Equivalent Twisting Moment,	190
Crank Shafts,	190
Curve of Twisting Moments,	191
Curves of Combined Twisting Moments,	192
Effect of the Momentum of Moving Parts,	193
The Overhung Crank,	193
Stress on a Crank Shaft,	196
Paddle Shafts,	196
Crank Shaft of Screw Engines,	198
Coupling and Coupling-Bolts of Shafting,	203
Surface of Crank Pins and Shaft Journals,	204
Special Connections for Shafting,	205
Screw Propeller Shafts,	206
Stern Bush for Screw Propeller Shafts,	207
The Stern Tube,	208
Material for Stern Bushes,	209
The Thrust Shaft,	209
Area of Thrust of Thrust Bearings,	209
Thrust Collars and Blocks,	210
Practical Rules for finding the Diameter of Shafts,	213
Hollow Shafts,	216

Chapter X.—Foundations, Bed-Plates, Columns, Guides, and Framing.

	Page
Bed-Plates and Foundations for Vertical Engines,	218
Main Bearings for Crank Shafts,	219
Caps or Keeps for Main Bearings,	222
Main-Bearing Bolts,	222
Brasses for Crank-Shaft Journals,	223
Columns of Vertical Engines,	224
Guide Plates,	225
Framing of Horizontal Engines,	225
Entablature of Oscillating and Steeple Engines,	227

Chapter XI.—The Condenser.

The Common or Jet Condenser,	228
Amount of Injection Water,	230
Area of the Injection Orifice,	231
Snifting Valve,	231
Bilge Injection,	232
The Surface Condenser,	232
,, ,, ,, Tubes of,	233
,, ,, ,, Economy of,	234
Amount of Cooling Surface,	235
Surface Condenser, Tubes,	236
Surface Condenser, Tube Plates, and Packings,	237
Steam Side and Water Side of Condenser Tubes,	239
Spacing of Condenser Tubes,	240
Quantity of Cooling Water,	242
Passage of Circulating Water,	243
Miscellaneous Fittings of a Condenser,	243

Chapter XII.—Pumps.

The Air-Pump and its Functions,	244
Single-Acting Vertical Air-Pump,	246
Double-Acting Air-Pump,	247
Efficiency of the Air-Pump,	247
Size of the Air-Pump,	247
,, Air-Pump Rods,	249
Horizontal Air-Pumps,	250
Air-Pump Buckets,	252
,, Valves,	253
Area through Air-Pump Valve Seats,	256
Circulating Pump,	256
Size of Circulating Pumps,	257
,, ,, Pump Rods,	258
Circulating Pump Buckets,	258
,, ,, Valves,	258
Sizes of Valves and Pipes of the Circulating Pump	259
Rotary Pumps for Circulating,	259
The Centrifugal Pump,	260
Size of Centrifugal Pumps,	261
Feed Pumps,	262
Sea Water, its Density, &c.,	262
Net and Gross Feed Water,	263
Size of Feed Pumps,	264
Valves and Valve Boxes of Feed Pumps,	265
Size of Feed Pipes, Rods, &c.,	266
Bilge Pumps	267
Mud Boxes, Directing Boxes, &c., for Bilge Pumps,	268
Sanitary Pumps, Hand Pumps, &c.,	268

Chapter XIII.—Valves and Valve Gear.

Early Forms of Valve and their Gear,	269
Long and Short D Valves,	270
Seaward's Cut-off and Exhaust Valves,	271
Common or Locomotive Slide Valve,	271
Trick Valve,	271
Double-ported Valve,	272
Treble-ported Valves,	272
Hackworth's Patent Valve,	273
Piston Valves,	274
Relief Frames of Slide Valves,	275
Double Valves,	276
Relief Frames of Slide Valves, Dawe & Holt's Patent,	277
Back Guides and Springs of Slide Valves,	279
Balance Pistons of Slide Valves of Vertical Engines,	279
Valve Rods and Spindles, the size of,	279
Valve Rod Bolts and Guides,	281
Sizes of Slide Valves,	282

	Page
Valve Gear, Link Motion,	283
The Slot Link,	285
Position of Suspension Pin of Links,	285
Single and Double Bar Links,	287
Valve Gears with Single Eccentrics,	288
Single Eccentric with Sliding Reversing Rod,	289
Hackworth's Dynamic Valve Gear,	289
Marshall's Valve Gear,	290
Joy's Valve Gear,	292
Sell's ,,	292
Expansion Valves, various forms of,	293
Expansion Valves for Compound Engines,	296
Eccentrics and Rules for their Size,	297
Eccentric Straps and Rods, Rules for their Size,	298
Reversing Gear and the strain on it,	298

Chapter XIV.—Valve Diagrams, &c.

Motion of the Piston Geometrically,	299
Zeuner's Diagram for Common Valve Motion,	300
To Find the Travel of Valve, 'Lead,' 'Lap,' &c.,	302
Effect of Inside Lap,	304
Effect of 'Notching up' the Link,	305
Diagram for an Independent Expansion Valve,	307
Diagram for an Expansion Valve working on the Back of the Main Valve,	309
Effect of Altering the Lap of the Expansion Valve,	310

Chapter XV.—Propellers.

Fundamental Principles of Propulsion,	312
Jet Propulsion, Ruthven's Plan,	314
,, the Hydro-motor,	315
Common Paddle Wheel with Radial Floats,	315
Paddle Wheel with Feathering Floats	317
Diameter of a Feathering Paddle Wheel,	320
Calculations for size of Floats, Frames, &c.,	320
Screw Propellers and their Efficiency,	325
Apparent and Negative Slip of a Screw,	327
Diameter of the Screw,	328
Thrust of a Screw Propeller,	329
Diameter and Pitch of Screw Propellers,	329
Indicated Thrust of Screw Propellers,	331
Construction of the Curve of Indicated Thrust,	332
Pitch of a Screw and Rules for finding it,	334
Area of Screw Blades,	335
Thickness of Propeller Blades,	335
Propeller Boss and its Construction,	336
Screw Propeller Blades, their Form and Construction,	337
Materials for Propeller Blades,	339
Feathering Screws,	340
Bevis's Patent Feathering Screw,	340
Lifting Screw Propeller,	340

Chapter XVI.—Sea Cocks and Valves.

The Kingston Valve,	343
Discharge Valves on the Ship's side,	345
Bilge Valves and Bilge Directing Boxes,	346
Communication Boxes,	346
Bilge Suction Pipings and Fittings,	347
Auxiliary Pumps,	347
The Water Service in the Engine Room,	348
Expansion Joints and their Safety Collars,	348

Chapter XVII.—Boilers: Fuel, &c., Evaporation.

	Page
Efficiency of the Furnace,	350
Chimney Draught,	351
Fuels, Varieties of, and their Composition,	351
Patent Fuels,	352
Value of a Fuel, how determined,	352
Quantity of Air required to burn Fuel,	354
Rate of Combustion,	354
Artificial Draught and Methods of obtaining it,	354
Composition and Value of Various Fuels,	355
Quantity of Fuel burnt on the Grate,	356
Size of the Funnel,	357
Evaporation,	359
Combustion, Complete and Incomplete,	359
Heating Surface of a Boiler,	360
Tube Surface of a Boiler,	361
Evaporative Power of a Boiler,	362

Chapter XVIII.—Boilers: Design and Proportions.

The Varieties of Marine Boilers,	363
The Rectangular or Box Boiler,	363
Cochrane's Water-tube Boiler,	365
The Cylindrical Boiler,	366
The Double-ended Boiler,	370
Oval Boilers,	374
Holt's Boiler,	374
The Dry Combustion Chamber Boiler,	374
The Gunboat Type of Boiler,	376
The Vertical Cylindrical Boiler,	376
The Locomotive Boiler for Marine Purposes,	376
Wet Bottom Locomotive Boilers,	377
Double-ended Locomotive Boilers,	377
Seaton's Patent,	377
The Dimensions of a Boiler and how to determine them,	378
The Area of Fire Grate, Rules for,	378
Consumption of Fuel,	379
The Tube and Heating Surface, Rules for,	380
The Area through the Tubes,	382
Capacity of Steam Space, Boiler Shell, &c.,	382
Area of Uptake and Funnel Sections,	383
Particulars of some Marine Boilers,	384

Chapter XIX.—Water-Tube Boilers.

Early Forms of Tubulous Boilers,	388
The Goldsworthy-Gurney Boiler,	389
Grate Area,	392
Tubes,	393
Circulating Tubes,	393
Stays,	394
Steam Drums,	394
The Two Types of Water-Tube Boilers,	394
Perkin's Boiler,	394
Herreshoff Boiler,	395
Watt's Boiler,	396
D'Allest Boiler,	396
Babcock & Wilcox Boiler,	396
Normand Boiler,	398
Blechynden's Boiler,	400
Ferguson & Fleming's Boiler,	400
Seaton's Boiler,	400
Yarrow Boiler,	400
Thornycroft's Boiler,	402
Du Temple Boiler,	402
White's Boiler,	402
Belleville Boiler,	404
Feed Arrangements,	407
Fire Places,	408

Chapter XX.—Boilers: Construction and Details.

The Boiler Shell, Cylindrical: Rules for,	410
Strength of Materials used in Boiler Construction,	410
The Riveting of Boiler Shells, and the Rules for,	411
Methods of Work followed in constructing Boiler Shells,	419
Materials for Boiler Plates,	419
Allowance for Wear of Boilers,	420
Boiler Ends and Methods of connecting to the Shell,	421
The Thickness of the End Plates of a Boiler.	423
Furnaces, their Construction and Strength,	424

	Page
Methods of Stiffening Furnaces,	426
,, ,, Connecting Furnaces to the Boiler Ends,	428
Materials used in the Construction of Furnaces,	429
Longitudinal Joints of Furnaces,	430
Combustion Chambers, their Size and Construction,	430
Boiler Tubes, their Size and Disposition,	432
Boiler Stay Tubes,	433
Stays for the Flat Surfaces of a Boiler,	434
Water Spaces in a Boiler,	435
Man-holes in the Boiler,	435

Chapter XXI.—Boiler Mountings and Fittings.

The Smoke-Box, its Size and Construction,	436
The Funnel, its Size and Construction,	437
Furnace Fronts and Doors,	438
Fire-Bars, their Size and Construction,	438
Patent Fire-Bars and Furnace-Doors,	439
Stop Valves, Rules for, and Construction of,	439
The Safety Valve, and Various Rules for,	441
Seaton & Cameron's Patent Safety Valve,	444
Internal Steam and Feed Pipes,	445
Feed Valves, their Size and Construction,	445
The Blow-off and Scum Cocks,	446
Water Gauges, their Size and Construction,	447
Steam Pressure Gauge and Sentinel Valve,	448
Steam Whistles,	449
The Separator and its Functions,	449
Boiler Clothing, Various Methods of,	449

Chapter XXII.—Fitting in of Machinery, Starting and Reversing of Engines.

Fitting Machinery into the Ship,	451
Boring the Sternpost,	451
Engine Seatings or Beds,	451
Thrust Block Seatings and Shaft Pedestals,	453
Boiler Seatings or Bearers,	453
Copper Pipes, and Rules for their Thickness, &c.,	454
Holding-down Bolts, and Staying of Engines,	455
Boiler Chocks and Ties,	456
The Starting and Reversing of Engines,	456
Brown's Patent Reversing Gear,	457
Steam Gear for Reversing,	457
Steam Turning Gear,	457
Steam Ash Hoists,	457
Governors for Marine Engines,	458
Silver and Meriton's Patent Governor,	458
Dunlop's Patent Governor,	459
Smith & Pinkney's Patent Governor,	459
Durham & Churchill's Patent Governor,	460
Coutts & Adamson's Patent Governor,	460
Westinghouse's Patent Governor,	461
Pressure and Vacuum Gauges,	461
Lubricators and Impermeators,	462
Drain Pipes from Cylinders, &c.,	463
Feed Heaters,	463
Evaporators,	464
Ladders, Gratings, and Platforms,	465

Chapter XXIII.—Materials used by the Marine Engineer.

Cast Iron, the Varieties and Characteristics of,	468
,, Mixtures of,	470
,, Strength, Specific Gravity, and Weight of,	471
Wrought Iron, Varieties and Modes of Manufacture of,	471
Bar Iron, Strength, Specific Gravity, and Weight of,	471
Plate Iron, Best Yorkshire Qualities,	472
,, Staffordshire,	473

	Page
Plate Iron, Durham,	474
,, Cleveland,	474
,, Scotch,	474
Iron Forgings, Methods of Manufacture and Strength of,	474
Steel, Old Methods of Manufacture,	475
Steel by the Bessemer Process,	476
Steel by the Siemens-Martin Process,	476
Puddled Steel,	476
The Steel used in Boiler Construction,	477
Steel Forgings: their Strength,	477
Steel Castings: their Strength,	478
Copper: its Strength, Specific Gravity, and Weight,	479
Tin: its Strength, Specific Gravity, and Weight,	480
Zinc: its Strength, Specific Gravity, and Weight,	480
Lead: its Strength, Specific Gravity, and Weight,	481
Aluminium: its Strength, Specific Gravity, and Weight,	481
Alloys—Yellow Brass, Muntz's Metal, Naval Brass, Tube Metal,	482
Gun Metal or Bronze, Varieties of, and their Strength,	482
Admiralty Bronze, Phosphor Bronze, Manganese Bronze,	483
Delta Metal,	484
White Metals: Parson's, Babbit's, and Fenton's,	484
Stone's Bronze, Basileus' Metal, Richard's Metal,	484
Weight of Machinery,	485
Results of Trials of Marine Engines,	490

Appendix	A.—Bremme's Valve Gear,	494
,,	B.—Board of Trade Old Rules for Shafts,	501
,,	C.— Do. do. Spare Gear,	503
,,	D.—Lloyd's Rules for Machinery and Boilers,	504
,,	E.—The Board of Trade Rules for Boilers,	514
,,	F.—Cylindrical Boiler Shells and Riveted Joints,	529
,,	G.—Board of Trade Rules for Safety Valves,	534
,,	H.—Admiralty Rules for Boilers and Machinery,	542
,,	I.—Rules of the British Corporation for the Survey and Registry of Shipping (Steel Boilers),	550
,,	K.—Rules of the Bureau Veritas for Boilers,	555
,,	L.—German Government Rules for the Mercantile Marine,	566
,,	M.—Working Pressure in lbs. per square inch for Boilers, as allowed by Rules of various Authorities,	572

Index, 573

LIST OF TABLES AND MEMORANDA.

	Page
Constants for Calculation of Indicated Horse-Power required for a given Speed of Ship,	44
Results of Trials of Steam Vessels of large size,	54
,, ,, ,, of small and medium size,	56
Comparison of Results with Steam of various Pressures,	80
Results of Trials of H.M.S. "Swinger" and "Goshawk,"	89
,, ,, ,, "Sheldrake," "Moorhen," and "Mallard,"	90
Results of Steam Trials with various Marine Engines,	113
Steam used expansively, Mean Pressure, &c.,	118
Factors for obtaining Practical from Theoretical Mean Pressure,	134
Revolutions of Engines in the Mercantile Marine,	142
,, ,, ,, Navy,	143
Standard Length of Stroke of Piston in the Mercantile Marine,	144
Multipliers for the Size of Steam and Exhaust Pipes,	149
Multipliers for the Thickness of Metal in Cylinders, &c.,	159
Dimensions of various parts of Stuffing-boxes and Glands,	161
Multipliers for various parts of a Piston,	169
,, ,, Substitution in Formulæ for Piston-Rods,	174
Ratio of Maximum to Mean Twisting Moment,	194
Factors for obtaining the size of Shaft Coupling Bolts,	204
Board of Trade Factors for calculating the size of Shafts,	214
Lloyd's Rules with regard to Shafting,	214
Square Feet of Surface per I.H.P.,	236
Number of Condenser Tubes to the Square Foot of Plate,	240
Ratio of Air-Pump to Cylinder Capacity,	248
Multipliers for various parts of an Air-Pump,	252
Ratio of Circulating Pump to Cylinder Capacity,	258
Factors for obtaining Diameter of Circulating Pump Pipes,	259
Ratio of Feed Pump to Cylinder Capacity,	264
Composition and Evaporative Power of various Fuels,	355
Ratio of Tube Surface to Total Heating Surface,	381
Particulars of some Marine Boilers as actually made,	383-385
Comparison of the Different Types of Marine Boilers,	386, 387
Weights of Boilers of various kinds,	405
Tenacity and Ultimate Extension of Plates,	411

Page

Pitch, Diameter of Rivets, &c., of Single-Riveted Lap Joints, . . . 412
,, ,, ,, Double- ,, ,, . . . 413
,, ,, ,, Treble- ,, ,, . . . 414
,, ,, ,, Double- ,, Butt ,, . . . 416
,, ,, ,, Treble- ,, ,, . . . 417
,, ,, ,, Double- ,, ,, . . . 418
Factors for calculating Thickness of Boiler Shell Plates, ... 421
Thickness of Boiler Tubes, ... 432
Rules for calculating size of Safety Valves, ... 443
Strength of Cast Iron, ... 471
Weight of Machinery as fitted on board certain Ships (Naval Ships, Yachts, Merchant Ships, &c.), ... 485-489
Results of Trials of Marine Engines, ... 490-493
Calculation of Valve-Gear Oscillations, ... 497
Lloyd's Factors for obtaining the Thickness of Shells of Boilers, . . 507
Lloyd's Tests for Iron and Steel, ... 512
Board of Trade Factors for obtaining the Thickness of Shells of Boilers, . 518
,, ,, ,, ,, Furnaces, . . 522
Safety-Valve Areas, ... 535
List of Makers of Spring Safety-Valves, ... 540
Tensile Strength of Plates, ... 556, 562
Working Pressure in lbs. per square inch for Boilers, as allowed by Rules of various Authorities, ... 572

LIST OF ILLUSTRATIONS.

	Page
(*Frontispiece*).	
Engine of the steamer "Comet,"	3
Side-Lever Engine,	4
"Grasshopper" Engine,	5
Steeple Engine,	6
Oscillating Engine (Section through Trunnions),	7
Oscillating Engine (Section through Valve Boxes),	8
Diagonal Engine,	9
Twin Cylinder Engine,	9
Vertical Screw Engines,	12, 13
Trunk Engines,	15, 16
Return Connecting-Rod Engine,	18, 19
An Indicator Diagram,	26
Kirk's Analysis (Block Model),	48
Curves of I.H.P. and Revolutions,	52
Three-Crank Triple Expansion Engine,	66
Cylinders of a Triple Expansion Engine,	72
Cylinders of a Two-Crank Quadruple Engine,	73
Quadruple Expansion Engines,	107
Triple Expansion Engines,	109, 110
Diagram of Mean Pressure,	119
Indicator Diagram, showing effect of Clearance and Compression,	121
Section through a Cylinder,	150
Shortened Cylinder with Port in Cover,	159
Stuffing Boxes,	160
Various Forms of Pistons,	165
Forged Steel Piston,	168
Cast Steel Piston,	169
Piston-Rod Ends and Guide Blocks,	171
Piston-Rod Crosshead,	175
Diagram showing Pressure on Guides, &c.,	177
Crosshead and Guide Block,	179
Connecting Rods,	181
Diagram showing Twisting Moment on a Crank Shaft,	191
Curve of Twisting Moments,	192
Curve of Combined Twisting Moments,	192
Cranks of Paddle-Wheel Engines,	195
Built-up Crank Shaft,	202
Common Thrust Block,	211
Improved Thrust Block,	212
Crank Shaft Bearing,	220
Improved Form of Crank Shaft Bearing	220
Cast Steel Main Bearing,	221
Condenser Tube Packings,	238
Air-Pump Buckets, Valves, &c.,	255
Wheel of a Centrifugal Pump,	260
Long D Slide Valve,	270
Common Locomotive Slide Valve,	271
Trick Slide Valve,	272
Common Double-Ported Valve,	272
Hackworth's Patent Valve,	273
Piston Slide Valve,	273
Self-Balanced Valve,	275
Thom's Patent Piston Valve,	276
Dawe and Holt's Patent Relief Frame,	277
Common Relief Frame,	278
Church's Patent Frame,	280
Proportions for Common Valve,	282
Proportions for Trick Valve,	283
The Slot Link,	284
Double Bar Link, with Rods inside,	286
Double Bar Link, with Rods outside,	287
Marshall's Patent Valve Gear,	291
Joy's Valve Gear,	292
Diagram of the Piston Path,	300
Zeuner's Diagram for Common Valve Motion,	301
Diagram showing the effect of "Notching-up,"	306
Link-Motion "Notched-up,"	306
Diagram for an Independent Expansion Valve,	308
Diagram for an Expansion Valve,	309, 311
Expansion Valve,	311

	Page
Paddle Wheel with Feathering Floats,	318
Diagonal Compound Paddle Engines,	321
Curve of Indicated Thrust,	333
Screw Propeller Blades,	338
Bevis' Patent Feathering Screw,	341
Kingston Valve,	344
Rectangular Boiler,	363
Cochrane's Boiler,	365
Oval Boiler,	367
Single-ended Cylindrical Boiler,	368
Four-Furnace Cylindrical Boiler,	369
Double-ended Boiler, with One Combustion Chamber,	371
Double-ended Boiler (Fox's Furnaces),	372
Gunboat Boiler,	375
Goldsworthy-Gurney's Boiler,	390
Babcock and Wilcox Boiler,	397
Normand Boiler,	399
Thornycroft Boiler,	399
Yarrow Boiler,	401
Belleville Boiler,	403
Boiler Ends,	423
Fox's Furnace,	425
Morison's Furnace,	427
Holmes' Furnace,	427
Furnace Ends,	429
Seaton and Cameron's Patent Safety Valve,	444
Weir's Patent Evaporator,	466
Bremme's Valve Gear,	495, 496
Morton's Valve Gear,	499
Rupture through Butt-straps,	558
Irregular Staying,	561

A MANUAL

OF

MARINE ENGINEERING.

CHAPTER I.

GENERAL INTRODUCTION.

THE first object aimed at by the marine engineer, is to propel a floating body through the water at a certain speed; the second, so to construct the propelling apparatus that the motion may readily be reversed; and the third, to adopt such an arrangement of propeller and engine as shall be convenient for the floating body and the service on which it is employed.

The principle on which nearly all marine propellers work is the projection of a mass of water in the direction opposite to that of the required motion. The only exception to this rule is the case of ferry steamers and some river craft, where a chain or rope lying in the bed of the river passes over a wheel or barrel in the ship itself.

The water, in modern practice, is projected by—(1.) One or more screws at the ends of the ship (as will be described under the heading of *propellers*); (2.) by one or more paddle-wheels outside of the ship; or, (3.) by a form of wheel in the inside of the ship, which is generally spoken of as a *jet*-propeller, as the water issues in jets from orifices in the ship's side.

The Paddle-Wheel.—The oldest of these three forms is the paddle-wheel; and although the screw-propeller has almost entirely superseded it in sea-going ships, it still maintains its position in river steamers, and in sea-going steamers of large power and light draught of water. Inasmuch as the screw, to work efficiently, must be wholly submerged, and any increase in its size demands an increase in the draught of water, whereas the paddle-wheel can be increased by making it broader on the face without increasing the *dip* of the floats: it follows, that where large power is required with a light draught of water, the screw or screws cannot be adopted, unless the diameter is less than the limit of draught,* and recourse must be had to paddle-wheels. Beyond this, the few claims which paddle-wheels have are limited to special cases, and even then their merits—such as decreased vibration, handiness in tugs, and steadi-

* By a *special formation* of the stern, light draught ships can be propelled by screws in smooth water with fair efficiency when the diameter exceeds the draught.

ness in a seaway—are only comparative; while against these are some very definite objections—viz., great weight, the amount of space occupied (and that in the most valuable part of the ship), and the liability of the wheels to damage, together with the great increase in breadth of ship, and the increase in the surfaces exposed to sea and wind.

The Screw.—The screw, on the other hand, is much smaller for equal powers, is wholly immersed, and also protected by the quarters of the ship; the propelling force is applied to the strongest part of the ship; the piston speed being much higher than that of the paddle-wheel engine, the engines are both smaller and lighter, and consequently cheaper, and the straining action on the hull is much less; the engines, lastly, can be placed in any convenient position, and occupy less space than those of the paddle-wheel. With these advantages there is the drawback that the screw, especially if badly designed, causes vibration of the stern of the ship, and with large powers produces severe side strains, which the form of stern is not calculated to resist well; and, again, the screw itself is apt to foul ropes and chains, while, from its liability to *race*, it is not such an efficient propeller against a strong head-wind and sea as the paddle-wheel.

The Jet-Propeller.—The *jet*-propeller, the invention of Mr. Ruthven, has not been received with general favour, and has had accorded to it very few practical trials. In this case the propeller is inside the ship, in the shape of a turbine wheel, or centrifugal pump, and so has the advantage of being wholly protected, while no considerations as to draught of water determine its adoption or rejection. It occupies a great amount of space in the ship, and requires large openings in the skin for inlets and outlets, and should the section of the stream of water be reduced by increasing the velocity, one of the great objections to the system—viz., the friction in the pipes and passages—is very much aggravated.

Reversing.—The reversing of the motion of the ship is obtained by reversing the motion of the propeller, and in this respect the paddle-wheel is more efficient than the screw, since the floats leave the water at nearly the same angle as they enter, and also present flat surfaces to the water; further, the stream of water from the paddle is not projected against the ship as it is from a screw, when going *astern*. The features in a screw which cause it to work efficiently and without vibration when going ahead, tend to produce the opposite results when its motion is reversed.

A consideration, therefore, of the qualities of each form of propeller, and of the necessities of the service on which the ship is to be employed, must determine which particular form shall be adopted.

Different Forms of Engine.—The third consideration for the engineer, as has been stated, embraces the machinery as well as the propeller; and since each form of propeller may be driven by engines of different design, each design has its special features, which will be found suitable or the reverse for special services,

and which, where the question is an open one, will either commend or condemn it according to the practice or the prejudices of the engineer.

The Beam Engine.—Naturally the beam engine was the first which commended itself to the minds of the pioneers of steam navigation, since, at the time when the propelling of ships by steam was only emerging from its embryo state, that particular form of steam-engine was the only one which had been proved by experience to be a success. Hence, we find Bell's "Comet" with a modification of a beam engine (fig. 1), since improved upon, under

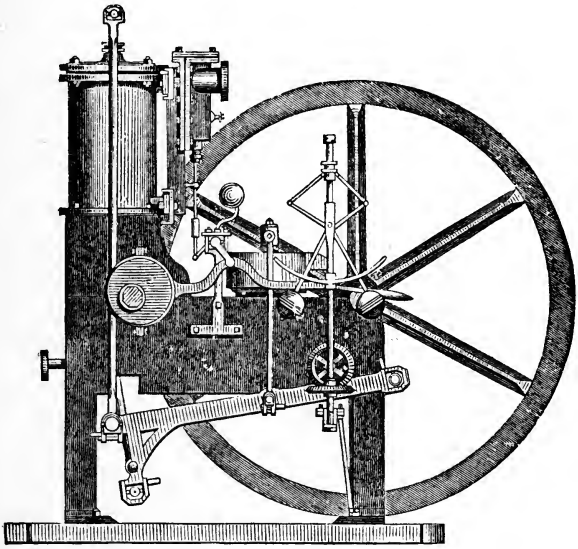

Fig. 1.—Engine of the "Comet," 1811–12.

the name of the *Side-Lever* Engine; this reached its highest pitch of perfection in the hands of the Napiers on the ships of the celebrated Cunard Line of Atlantic Steamers, as shown in fig. 2. This class of engine still exists in two forms, the one, as in fig. 2, where the fulcrum or weigh-shaft is at or near the centre of the beam, the connecting-rod being at one end and the side rods from the piston-rod crossheads at the other; this is the true "Side-Lever" Engine. When the fulcrum or weigh-shaft is at one end, as was the case in the engines of the "Comet," it is usually called a "Grasshopper" Engine, and in this form is much used in tug-boats and river steamers. The chief advantages possessed by this engine, as shown in fig. 3, are cheapness of construction, consequent on sim-

plicity of design; a long stroke of piston can be obtained in a shallow ship; the racking action from the engine when in motion is very slight, and taken by the strongest part of the ship; and when only a single cylinder is employed, there is in practice no "dead" point—that is, the crank can be moved from any position in which it may have stopped. This latter quality is due to the

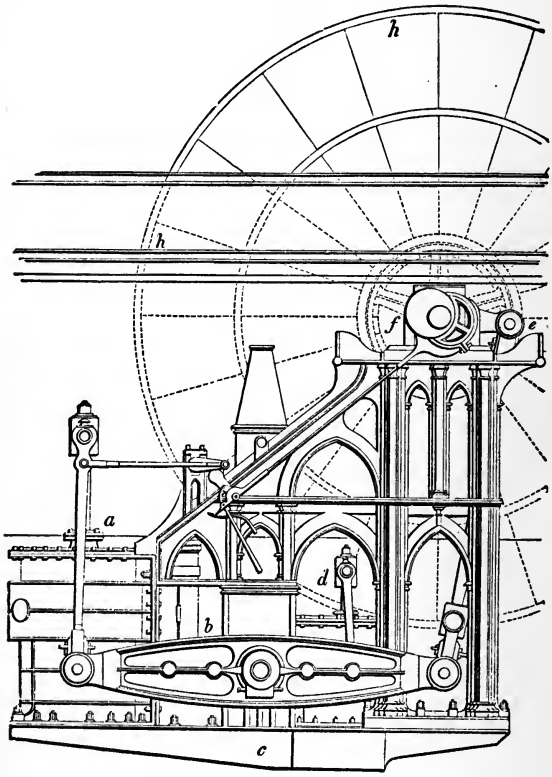

Fig. 2.—"Side-Lever" Engine.

position of the connecting-rod with respect to the levers when the piston is at the end of its stroke, and the slight amount of *play* in the brasses. This class of engine is capable of working satisfactorily when in such a bad state of repair that the same condition in any other form of engine would prove dangerous; moreover, it seems to require far less care and attention than are usually found necessary with marine machinery. The objections

to it are that it is somewhat heavier, and takes up more room in the ship than more modern forms.

The beam engine, in its earlier and original form, is still adopted by American engineers, both in river and sea-going steamers, and

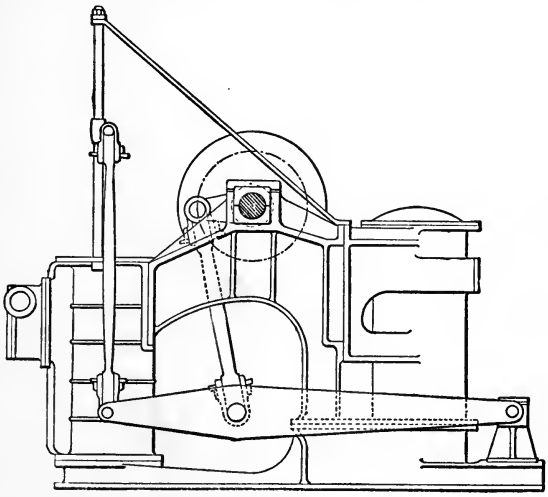

Fig. 3.—"Grasshopper" Engine.

in their hands it has proved a success; but the objections to it are serious for sea-going ships, especially those of European form, which have not so great a height of deck above the water-line.

The Steeple Engine (fig. 4) is one of the earliest forms of marine engine where the piston operated directly on the crank. It is a favourite engine on the Clyde, and possesses the advantage of taking up little room, is moderately light and cheap, and has fewer working parts than the side-lever engine; but, on the other hand, the length of stroke is limited by the depth of the ship, and it is not easy to arrange for two piston-rods; moreover, considerable height is required above the shaft.

The Oscillating Engine (represented in figs. 5 and 6), first suggested by Trevithick, and brought to its highest pitch of perfection by Messrs. John Penn & Sons, is, on the whole, the one which is best adapted for paddle-wheels under ordinary circumstances. It is the lightest and most compact form, and has fewest working parts. It can be arranged with the cylinder vertical in its mean position, or inclined even as far as the horizontal position; it will work best, of course, in the former position, and the chief objection to its more frequent adoption in shallow draught steamers is the want of room vertically to effect this. It is not so convenient a form when steam of higher pressure is employed, from the difficulty of getting an

efficient apparatus for an early cut-off of steam, and the liability of the trunnion to leak; the former is the real difficulty, the latter existing more in imagination than practice, and the solution has been found in the introduction of compound cylinders. The most successful oscillating engines, however, have been those of large power, working with a steam pressure not exceeding 30 lbs. per square inch, and consuming on the average $2\frac{3}{4}$ lbs. of coal per I.H.P. per hour; and as they have been, and are likely to be, only fitted in ships where consumption of coal is not of first importance (as in fast passenger steamers on short voyages, and in yachts on similar service), it seems wise to avoid the higher pressures, especially as with them the cost and weight of machinery is materially increased. The inclined position of cylinder has been adopted in fast, shallow draught steamers with success; and to get over the difficulty caused by the large space athwartships required by this type of engine with two cylinders, one cylinder has been placed before the shaft and the other abaft it, both operating on the same crank.

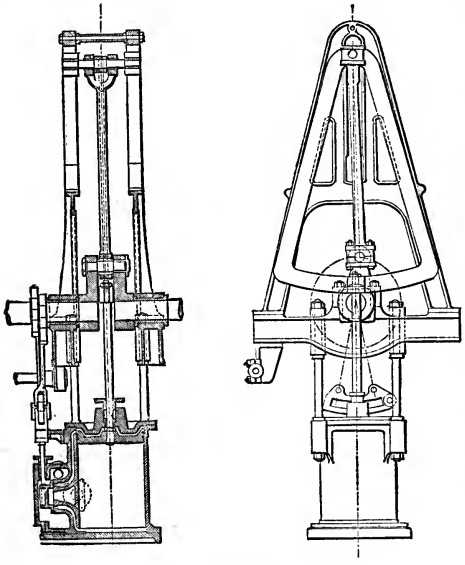

Fig. 4.—Steeple Engine.

The Diagonal or Inclined Direct-acting Engine (fig. 7) is one that, although not altogether new, was not so much adopted in former years as it has been latterly. It is simply a horizontal engine, set at an angle so as to suit the height of the shaft at one end and the frames of the ship at the other. It takes up a large amount of space in a fore and aft direction, but not so much in the athwartship direction as either the oscillating or side-lever type, and for this reason no doubt, and because it is somewhat heavier and more expensive than the other forms of paddle engine, it had not found so much favour with engineers. It is, however, a very convenient form when space is not an object in design, especially with large powers in light draught vessels, as the weight is not so much con-

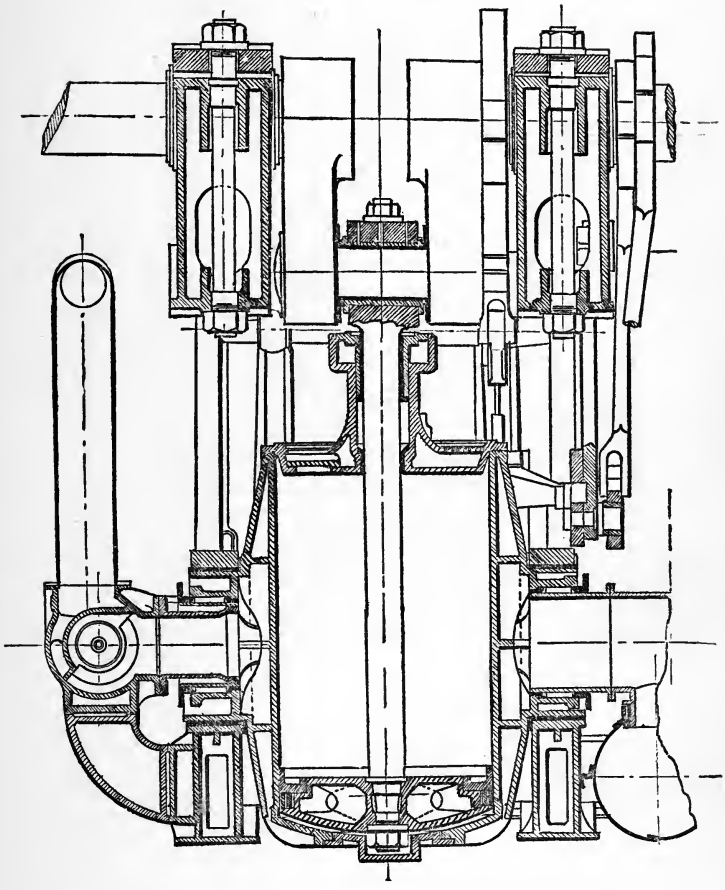

Fig. 5.—Oscillating Engine—Section through Trunnions.

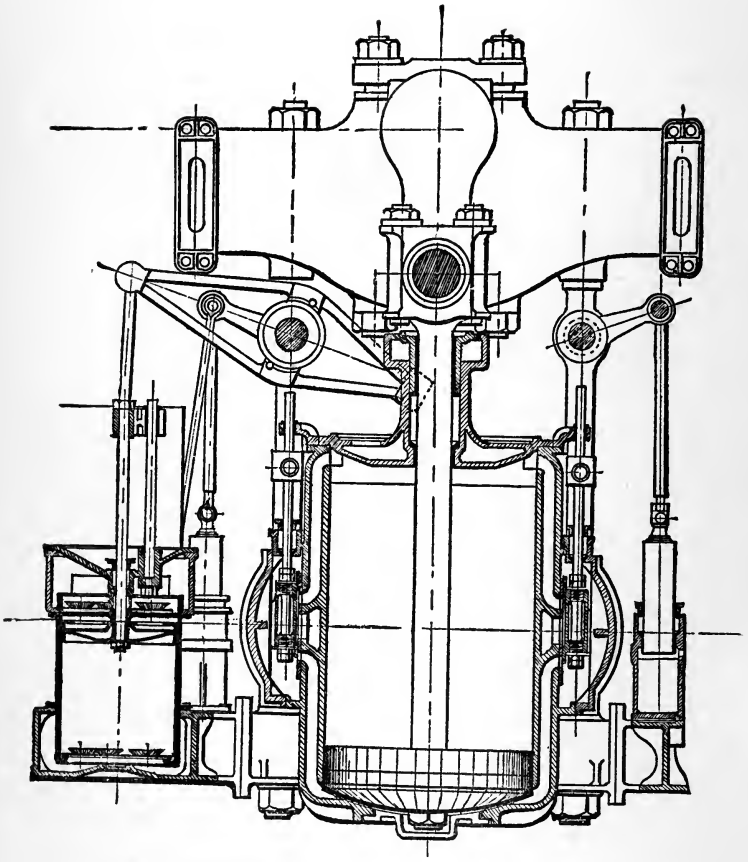

Fig. 6.—Oscillating Engine—Section through Valve Boxes.

centrated, and the strains are in a direction where the natural structure of such ships is best calculated to resist them. For these reasons this form of engine is now adopted generally in the fast river steamers built on the Clyde. In some ships of very light draught, the heavy cast-iron framing is replaced with light wrought iron, or steel structures, so designed as to form part of the framework of the ship; when this has been done the weight of the engine has not exceeded that of other types.

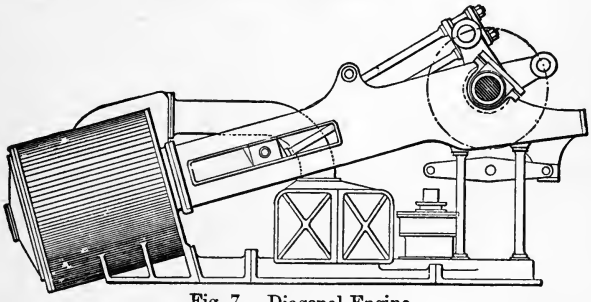

Fig. 7.—Diagonal Engine.

Other Forms of Engines.—There have been many other forms of paddle-wheel engines, such as the "Gorgon" Engine, a form of direct-acting engine; the "Annular Cylinder" Engine of Messrs. Maudslay, in which the connecting-rod was arranged so as to be partly within a cylinder placed in the centre of the steam cylinder, so that the piston was *annular;* the twin cylinder engine (fig. 8) of the same eminent firm, in which the same idea as to the connecting-rod was carried out; the open cylinder or atmospheric engine, in which steam was admitted only to the underside of the piston; the trunk engine, in which the piston had a trunk or cylinder on its top side instead of a rod, and in which the connecting-rod worked; and others, all of which have ceased to be of interest except from historic considerations, as the types previously particularised, and which will be more fully described later on, have entirely replaced them.

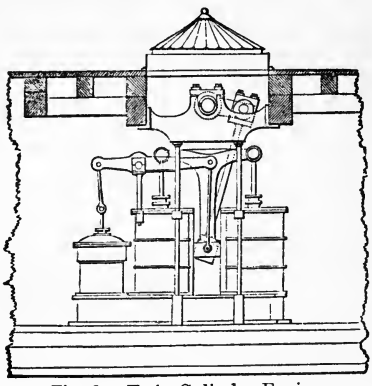

Fig. 8.—Twin Cylinder Engine.

Screw Engines.—On the introduction of the screw as a means of propelling ships, it was only natural that engineers should seek to adopt

the then existing forms of marine engines to drive it, rather than to invent new ones, as the fate of the screw for many years might have otherwise been that of the engines—viz., consignment to the dark confines of the Patent Museum. As the screw required to be run at many more revolutions per minute than the paddle-wheels, and there had been established definite limits for the number of revolutions of the engines, it became necessary to introduce wheel-gearing to satisfy these two conditions. But as an example of the manner in which conditions may continue to impose themselves long after their necessity has ceased to exist, gearing remained as part of a screw engine, with types of engines which might safely and easily have been run at the same number of revolutions as the screw, or rather, at the number of revolutions a screw *might* have been run at, if engineers had made their screws sufficiently large; for cause and effect had so changed places, that small screws existed long after the time when engineers had found how to make large ones of sufficient strength. So, beam engines, side-lever engines, oscillating engines, and many of the other forms were made to drive the screw by the intervention of cog-wheels, and for many years the millwright was an important functionary in a marine-engine shop, especially where repairs were executed. No doubt, it is owing to these considerations that the paddle-wheel so long maintained its position; the machinery of a screw ship was as heavy as that of a paddle-wheel ship; it occupied more space, and the wear and tear was much heavier, while the belief in the power of the visible wheel was far more sincere than that in the invisible screw, and it required the experiment of the "Alecto" and "Rattler" to convince wavering minds. It is not necessary here to go into any detail as to the early forms of screw engine, as they are now extinct, and the interest, therefore, attaching to them is purely historical. It is, therefore, only to show the genesis of the marine engine, and to account for certain "survivals," which will be noted further on, that the subject has been entered upon here at all.

The first step from the geared engine was to adopt modified forms of the paddle engine, so as to work direct on the screw shaft. The oscillating cylinder was employed vertically by inclining the shafting so as to be high enough at the forward end for the cylinder to work under it; then the cylinder or cylinders were placed diagonally, and finally inverted vertically over the shaft, which was inclined the reverse way to that described above. Maudslay's annular cylinders were inverted above the shaft. Beam engines even were arranged to work direct; but with very limited success. Finally, the direct-acting engine was changed from the diagonal or inclined position to the inverted vertical; it has ever since been the most approved and successful engine for merchant steamers, and is now adopted by the British Admiralty for all classes of warships.

Another engine which soon attracted the attention of engi-

neers seeking a design for direct-working screw engines, was the "Steeple" form; for, when laid horizontally and modified to suit that position, it made a useful arrangement, especially for warships and others requiring the machinery to be low down in the hull. This became known then as the "Return Connecting-Rod" Engine, and has since been very generally adopted by engineers, sometimes from necessity, but oftener from choice. It is still in very general use in the older warships. Direct-acting engines, also, were adopted in a horizontal or nearly horizontal position by some engineers for warships. These, too, have held their own, and have many advantages over all other horizontal forms, especially in later days, since the introduction of higher pressures of steam; and they are likely to hold the same position in the estimation of engineers for warships, when required to be horizontal, as their congeners of the vertical type do for merchant ships.

The late Mr. John Penn invented and introduced the horizontal "Trunk" Engine, and its performance in the frigate "Arrogant," of 400 N.H.P., was so satisfactory, that the Admiralty adopted it very extensively, and continued to use it even for compound engines. It was taken up by a few of the larger steamship companies, but was finally abandoned by them in favour of vertical engines.

Various attempts have been made from time to time to drive the screw by what are called "Rotatory" Engines—that is, engines in which a rotatory motion is got direct from the piston or its substitute without the intervention of rods in the ordinary way; but although some of them have shown great ingenuity on the part of their inventors, and have, in some cases, worked satisfactorily for a time, none of them have had sufficient success to enable their promoters to go beyond the experimental stage (*vide* Rankine on *The Steam Engine*, pp. 503-4).

Of the screw engines above sketched out, and now existing as the types of modern engineering practice, the direct-acting vertical form deserves first attention, as it is the only one which is now employed in both merchant ships and warships.

The Vertical Direct-acting Engine (figs. 9 and 10) consists essentially of one or more cylinders, supported on columns, and having piston-rods, guided on suitable slides, generally attached to the columns; and the lineal motion of the piston converted to rotary motion by means of a connecting-rod from the piston-rod ends to the crank-pin. This arrangement of engine admits of longer stroke of piston than obtains in the horizontal engines: the working parts are well above the bilge of the ship, and in clear view of the engineer; the weight of the pistons is taken on the crank-pins, so that the energy stored in them in the upstroke is given out on the downstroke, instead of being on the side of the cylinders, as in horizontal engines when it only serves to cause frictional resistance to their motion; the same comparisons hold good for the valves, piston-rods, and connecting-rods. There is no racking

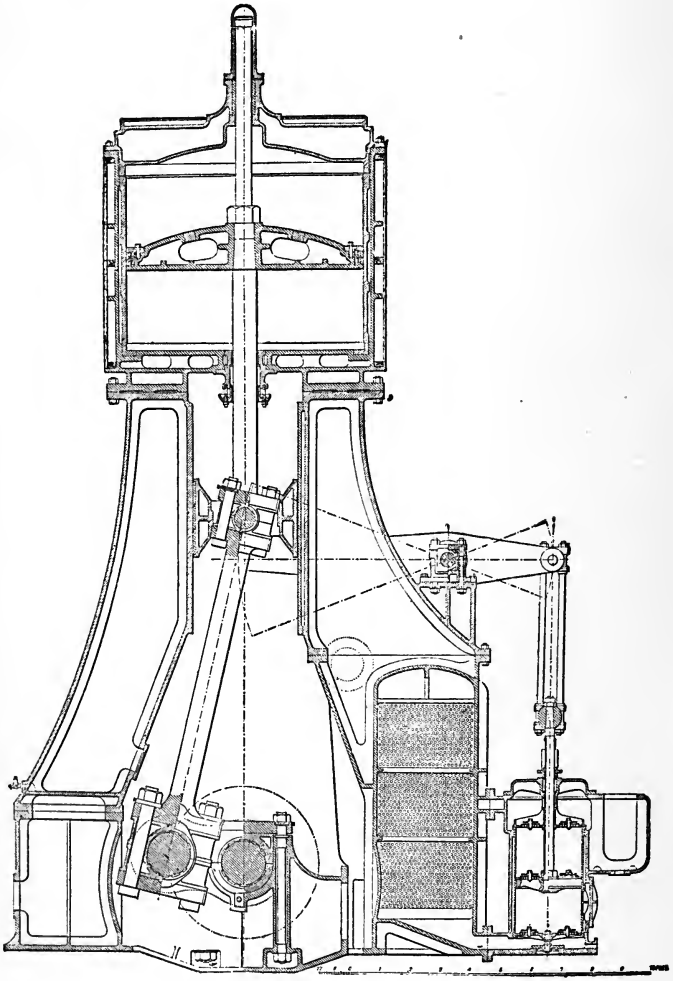

Fig. 9.—Vertical Screw Engines.

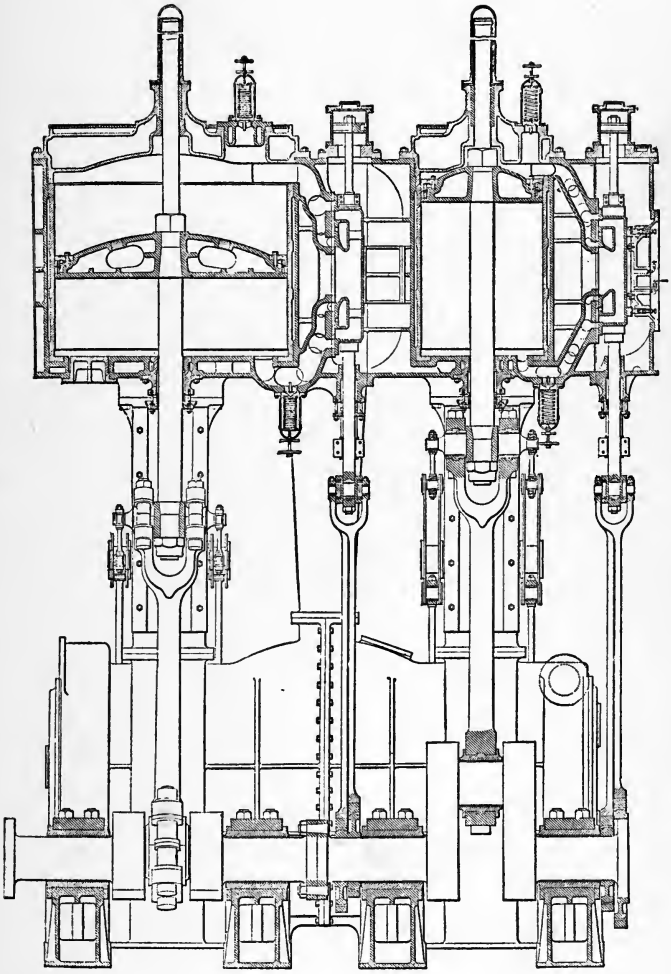

Fig. 10.—Vertical Screw Engines.

strain on the structure of the ship, as with horizontal engines; and there is greater scope for variety of design and arrangement of detail with this class than in almost any other. On the other hand, they are generally somewhat heavier than the better forms of horizontal engine; their height causes the centre of gravity of machinery to be somewhat higher than that of horizontal engines, and also prevents their use when it is a necessity for the machinery to be below the water-line, as with unprotected warships, or when the 'tween decks are required as clear as possible of obstruction. This latter, however, is an argument used only by the opponents of vertical engines, as, whatever engine is fitted in a ship, there must be hatches, &c., immediately over it for light and ventilation, which hatches cannot be much smaller than would be necessary for a vertical engine. The vertical engine requires less attention when at work than the horizontal, and the wear and tear is considerably less. Under these circumstances, it is not astonishing that it has entirely replaced the horizontal engine in the mercantile marine, and is doing the same in the Navy.

The Horizontal Direct-acting Engine works on precisely the same principle, and has the same essential working parts as the vertical before described; but inasmuch as only half the beam of the ship is available for those parts, the stroke of the piston is exceedingly short in ordinary sized warships, whose beam far exceeds that of large merchant steamers, and is not very long in even the largest warship.

Since, with a fixed number of revolutions, a certain capacity of cylinder is necessary for a certain power, it follows that any diminution in the length of the cylinder necessitates a corresponding increase in its diameter; hence, these very short stroke engines have abnormally large pistons for their power, and, consequently, an aggravation of the evil arising from the weight of the pistons. As the momentum of the pistons has to be balanced by fitting heavy balance weights opposite the cranks, to reduce the racking on the framework, both of engines and ship, and as these weights cannot conveniently be placed very far out from the centre of the shaft, this class of engine is more difficult to balance than others of the horizontal type.

It may be said, however, in their favour, that they have shown themselves in practice to be efficient in working, and, since the introduction of the compound engine and higher pressures of steam, have found greater favour than in the days when, for reasons stated below, 30 lbs. pressure was considered the highest safe limit for large engines. They possess the advantage of having their working parts well in view, and easy of examination and repair.

Penn's Trunk Engine (figs. 11 and 12) differs from all others by having no piston-rod as an intermediary between the piston and the crank-pin, for the connecting-rod hinges on a pin or *gudgeon* in the centre of the piston, and is surrounded by a cylindrical case

or *trunk* concentric with the cylinder, attached to the piston, and passing through a stuffing-box in the front of the cylinder; there is also a similar trunk in rear of the piston, which serves as a support for the piston, allows of access to the gudgeon and connecting-rod end, and preserves an equal area of piston exposed to steam both at back and front. The direction of motion of the crank-pin, when the engine is moving "ahead," is so arranged that the thrust of the connecting-rod is upward; consequently, the pressure on the cylinder-walls is the difference, instead of the sum, of the weight of the piston, &c., and the thrust of the rod.

This engine is the lightest and most compact of all the forms of marine screw engines, when constructed of the same materials; and for very large sizes with the lower steam pressures has been unsurpassed by any other type of engine. The length of stroke is considerably more than that of the ordinary direct-acting engine, and the connecting-rod much longer than that of any other form, being from two and a half to three times the length of stroke; the weight of the piston is taken by the trunks in great measure, and there are no piston-rod guides. But with the increase of pressure the defects of this form become more apparent, and lie with the very part that distinguishes it—viz., the trunks. The friction of the large stuffing-boxes is very great; in fact, may be so great by unduly tightening the glands as to stop the engine. The loss of heat from the large surface of the trunks being alternately exposed to steam and to the atmosphere, is very great, as is also that from their inner surfaces. The gudgeon brasses are exposed to a very high temperature and liable to become heated, and when heated cannot easily be cooled, and are not accessible for adjustment; and, perhaps not least, the cylinders become oval from the thrust of the connecting-rod exceeding the weight of the piston when about mid-stroke, and in that position the trunks render least help, and when the engines are going "astern" both the thrust and weight are on the bottom side of the cylinder, and unite in rubbing away the metal.

The Return Connecting-Rod Engine (figs. 13 and 14) is the third form of the horizontal type formerly in general use. It differs chiefly from the others by having the connecting-rod on the opposite side of the crank-shaft to the cylinder, there being two piston-rods, one above the shaft on one side of the crank, and the other below the shaft on the other side of the crank, and both secured to a cross-head, to the centre part of which the connecting-rod is coupled. This arrangement admits of a much longer stroke than either of the other plans, as the cylinder may be so close to the shaft as to allow only for the clearance of the crank and of a long connecting-rod, since there need be nothing beyond the crosshead to obstruct its travel. But this is only true, so far as stroke is concerned, in the case of large engines, as, in order to allow for the two rods, there is a minimum limit to the diameter of the piston, and if the capacity of cylinder be limited, then the length of stroke must be

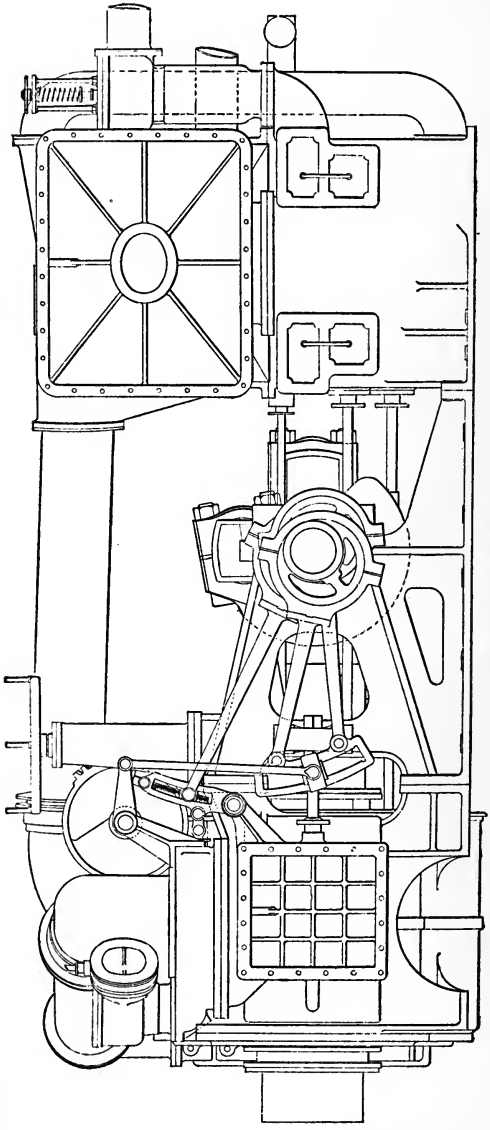

Fig. 11.—Trunk Engines.

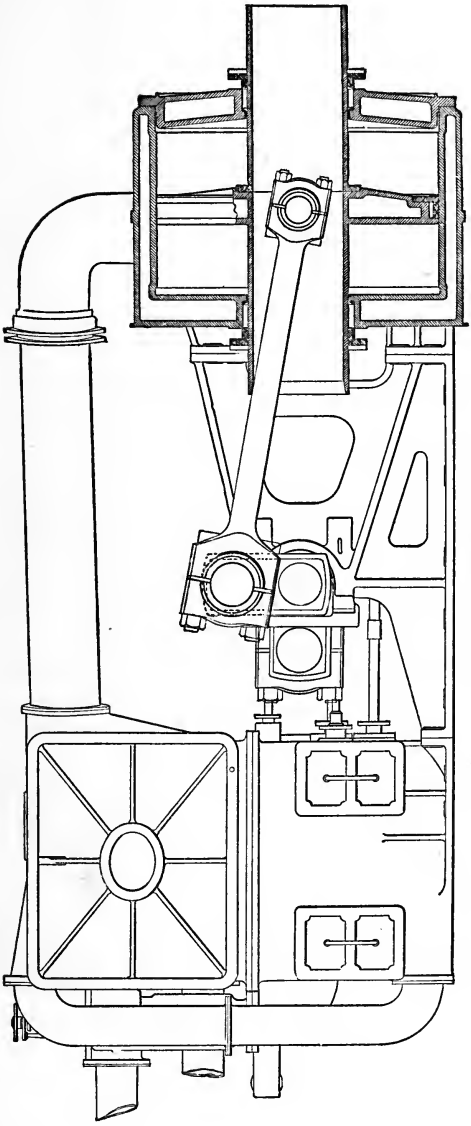

Fig. 12.—Trunk Engines.

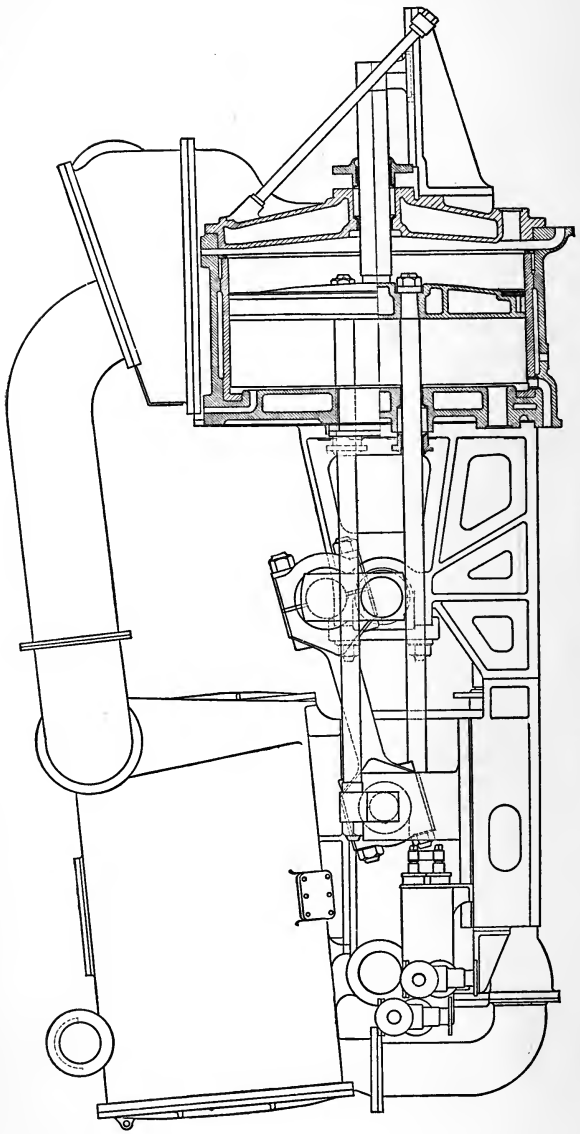

Fig. 13.—Return Connecting-Rod Engine.

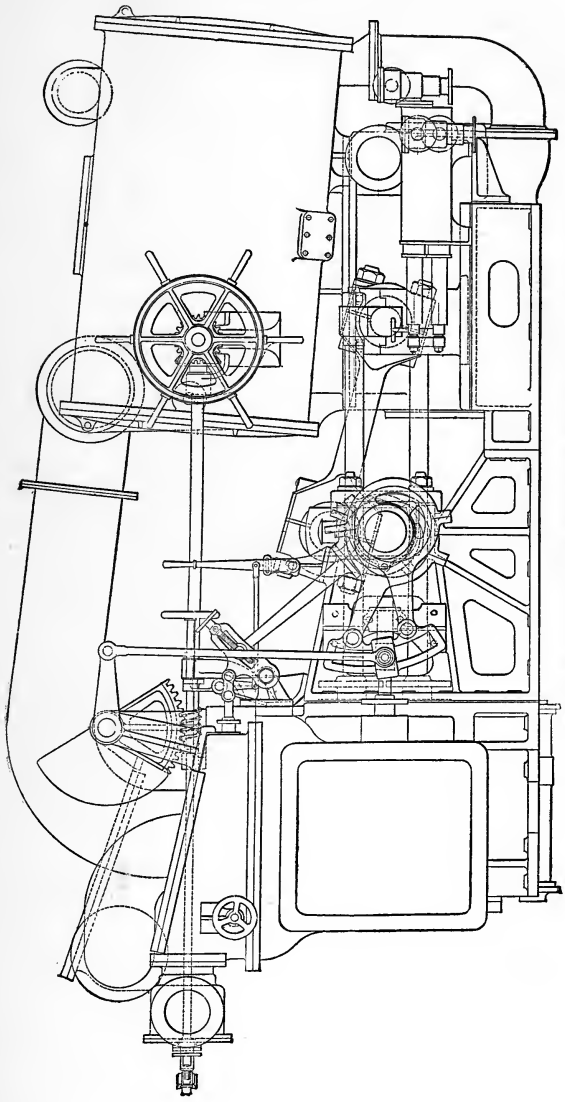

Fig. 14.—Return Connecting-Rod Engine.

made to suit this condition. Hence, in small compound engines it is very difficult to preserve a reasonable ratio between the two cylinders, and so it is found in practice that with these engines the ratio is two and three-quarters to one, and even as low as two and a half to one, thereby very much reducing the good results obtainable from the compound system. One palpable objection to this form is the double rods, necessitating double the number of stuffing-boxes, and doubling the number of parts liable to derangements, besides preventing the main bearings being carried close to the crank-arms, as they should be. The eccentric-rods, also, are necessarily exceedingly short, unless placed, as is done by some makers, on the same side as the connecting-rod, and the working parts generally are somewhat cramped.

It is from considerations such as herein sketched out, that a designer must choose the kind of propeller to suit his requirements, and the type of engine to drive that propeller. None of them are altogether free from defects, and the most successful selection will be that one in which the good qualities are most necessary for the particular service, and the bad ones least harmful, and, as far as possible, mitigated by careful provision in working out the design. It is in combating the bad points that the engineer finds his knowledge and skill most exercised, and from success in this direction he derives his reputation, and perhaps the keenest enjoyment of the practice of his profession.

CHAPTER II.

HORSE-POWER—NOMINAL AND INDICATED.

When the steam-engine began to take the place of other motors, it was soon found necessary to introduce some unit by which its power could be expressed without using such high numbers as to place it beyond the grasp of ordinary minds. As the engine was frequently taking the place of horses to work mining and other machinery, it was only natural that the work performed by a horse should be taken as the basis for this unit of measurement. The number of units of work performed by the most powerful dray horses was found to be 33,000, so Watt chose this as his unit of power for his engines and called it "horse-power," and this has continued to be the standard ever since, both for land and marine engines.

Watt found that the mean pressure usually obtained in the cylinders of his engines was 7 pounds per square inch. He had also fixed the proper piston speed at $128 \times \sqrt[3]{\text{stroke}}$ per minute, and his engines were arranged to work at this speed, so that he estimated the power which would be developed when at work to be

$$\text{Area of piston} \times 7 \times 128 \times \sqrt[3]{\text{stroke}} \div 33{,}000.$$

The power so calculated was called "*Nominal*," because the engine was described as of that power, and in practice that power was actually obtained. But when the boiler could be constructed so as to supply steam above the atmospheric pressure, and the engine was run with more strokes per minute than before, the power developed exceeded the nominal power, and from the name of the instrument by which the pressure of steam in the cylinder was obtained it came to be called the "*Indicated*" Power.

The discrepancy between Nominal and Indicated Power has become so great, that for all scientific purposes the former is utterly useless, and is practically obsolete. It remains, nevertheless, in full force among manufacturers and buyers of engines, because it better conveys the commercial value of an engine than does the actual power; for since the area of the piston is usually the only

variable in the expression, it follows that the size of the cylinder, and therefore the size of all the other parts, must vary directly with the Nominal Horse-Power. But since Indicated Horse-Power depends on three functions—viz., area of piston, speed of piston, and the pressure of steam—the value may be altered by altering the value of one or more of these, which alteration may be material without altering the commercial value. For example, an engine may be made to run at a much higher number of revolutions, even so as to double its Indicated Power, without any additional cost whatever in construction.

The Admiralty modified Watt's rule so as to suit it to the practice of the early days of steam-navigation, by substituting the actual piston speed for the arbitrary one, and so

$$\left.\begin{matrix}\text{Admiralty Nominal} \\ \text{Horse-Power}\end{matrix}\right\} = \frac{\text{Area of piston} \times \text{speed of piston} \times 7}{33{,}000}.$$

But for some years past the Admiralty have dropped the use of the expression altogether, and before doing so finally, only used it in the modified sense of being one-sixth of the Indicated Power.

In the Mercantile Marine the present rule for Nominal Horse-Power is by no means uniform, every firm of manufacturers having its own, and all more or less arbitrary. Before the introduction of the compound engine and increased boiler pressures, it was a very general rule to allow 30 *circular* inches per N.H.P.; *i.e.*, the rule was—

$$\text{N.H.P.} = \frac{(\text{Diameter of cylinder in inches})^2}{30},$$

and after that period for compound engines—D being the diameter of the low-pressure cylinder, and d that of the high-pressure—

$$\text{N.H.P.} = \frac{d^2 + D^2}{33}.$$

But neither of these rules took into account the length of the stroke or the boiler pressure. To provide for the latter some manufacturers decreased the divisor from 33 to 30, as the pressure increased from 60 lbs. to 80 lbs. per square inch; while others contented themselves with the compensation obtained by decreasing the size of the high-pressure cylinder, as the pressure was increased. At the present moment the above rules hold good in certain districts, and so long as there is a recognised standard for the length of stroke they are very convenient in many ways. The competition among engine-builders, however, gradually destroyed all traces of such a standard, and the rivalry between the builders of long-stroke and the upholders of short-stroke engines prevented the possibility of its existence. The general adoption of the triple compound engine, however, caused the question of stroke to be removed from the field of competition, and there is now again more uniformity in practice. In order to meet these difficulties some engine-makers have adopted a rule for Nominal Horse-Power, based on the *capacity*

of the cylinder, and in so doing have nearly met the requirement on which the continuance of the expression depends—viz., the measure of the commercial value of the engine; but it fails, as compared with the old rule, to maintain a fixed or nearly fixed ratio between the N.H.P. and the I.H.P. For the power *per revolution* depends on the capacity of the cylinder so long as the mean pressure is the same; but since small engines are usually worked at a higher number of revolutions than larger ones, the power developed by the former will bear a larger ratio to the Nominal Power than will be the case in the latter. Another disadvantage in making the N.H.P. to vary directly with the capacity, and so bear no fixed relation to the I.H.P., is that all the old-fashioned rules, where allowances are made at so much per N.H.P., will be entirely useless; and this, although no great loss to trained engineers, would be severely felt by shipowners and other non-professional men, who can now lay down their requirements for a specification without doing violence to good practice or being very wide of the real necessities of the case. Again, the commercial value of an engine does not vary *exactly* with the capacity of the cylinders, and so the proposed method, to some extent, fails even on the point on which it has the greatest claim to consideration.

The Institution of Naval Architects appointed a special committee to consider the question of Nominal Horse-Power, but did not succeed in coming to any definitely practical conclusion. Since then Lloyd's Committee have made an effort to solve the difficulty, and were no doubt met at the outset by the dilemma that, whereas they wanted a rule which should give underwriters and owners some idea of the propelling power of the engines, brokers, owners, and underwriters desired, as well, some guide to the money value of machinery.

No *Nominal* Power can be any guide to the capabilities of the engine, unless the power of the boilers is also in some way expressed or understood; and as it is not easy to imagine how the former can be introduced into any expression which shall effect the latter, or *vice versâ*, the requirements of Lloyd's Committee have remained unfulfilled.

That there is need of uniform practice in naming the power of engines, is apparent to every one having to do with steamships, and it is a source of satisfaction that the Board of Trade Department, which registers the Power, has laid down a definite and simple method of computing it. It may, no doubt, be urged that attempts might be made to take unjust advantage of such a rule, which would lead to the construction of badly proportioned engines; but this would be easily detected, and no engine-builder of reputation would sacrifice the good working-properties of his engines for a temporary advantage, which might be in the end bought at a very dear price. If it is necessary that a power be named for an engine which shall enable unprofessional men to judge of its capabilities, the better plan would be to revert

to the practice of Watt, who, as has been shown, attempted to define the power which the engine was actually expected to develop, and have some rule in addition which should give approximately the Indicated Horse-Power. It would, of course, be far better to register the I.H.P., but as it is not always possible to obtain this, the next best method is to estimate it, and call it the Estimated Horse-Power, or E.H.P.

The following rule will give approximately the horse-power developed by a compound or triple engine made in accordance with modern practice :—

$$\text{E.H.P.} = \frac{\text{D}^2 \times \sqrt{p} \times \text{R} \times \text{S}}{8500}.$$

Where D is the diameter of the low-pressure cylinder, p the boiler pressure, R the number of revolutions per minute, S the stroke of piston in feet.

For example.—To estimate the Indicated Horse-Power of an engine having cylinders 40 in. and 80 in. diameter and 48 in. stroke, revolutions 60, and boiler pressure 80 lbs.

$$\text{E.H.P.} = \frac{80^2 \times \sqrt{80} \times 60 \times 4}{8500}$$

$$= 1626.$$

As some shipowners still enquire for engines of a certain nominal horse-power, and this is generally based on an allowance of so many *circular* inches per horse-power, the following rules may be followed for finding the diameters of the cylinders. Let D be the diameter of the low-pressure cylinder, and d that of the high-pressure, r the ratio of the capacity of the low to the high, and n the allowance of circular inches :—

$$\text{N.H.P} = \frac{d^2 + \text{D}^2}{n}$$

Now, since

$$\text{D}^2 = r\,d^2\,;\ \text{N.H.P.} = (d^2 + r\,d^2) \div n,$$

and

$$\text{diameter of high-pressure cylinder} = \sqrt{\frac{\text{N.H.P.} \times n}{1 + r}}$$

and

$$\text{diameter of low-pressure cylinder} = d\sqrt{r}$$

Example.—To find the diameter of the cylinders of a compound engine of 200 N.H.P. ; the ratio of low-pressure cylinder to the high-pressure being 4, and the allowance 33 circular inches :

$$\text{Diameter of high-pressure cylinder} = \sqrt{\frac{200 \times 33}{1 + 4}} = 36{\cdot}3 \text{ inches,}$$

$$\text{diameter of low-pressure cylinder} = 36{\cdot}3 \times \sqrt{4} = 72{\cdot}6 \text{ inches.}$$

Many other rules have been propounded for N.H.P., some of which are ingenious, but impracticable, while others fail to give results of any value whatever, so that neither class needs notice here; but it may be mentioned that when non-condensing engines were more used in steamships than they are at present, it was found necessary to have a special rule for them, which was

$$\text{N.H.P.} = \frac{D^2 \times \sqrt[3]{S}}{20}$$

D being the diameter of the cylinder in inches, and S the stroke in feet.

Indicated Horse-Power may be defined as the measure of work done in the cylinder of a steam-engine, as shown from the indicator-diagrams, and only falls short of the actual work by such small losses as are caused by the friction of the pin or pencil against the paper, the friction of its working parts, and that in the pipes or passages connecting the indicator to the cylinder. The latter discrepancy is by far the most important, and is sometimes serious in very long stroke engines, where the indicator pipe is several feet long. The others, in the hands of a skilful operator, are not so serious, certainly not in marine engines to the extent stated by Mr. Hirn, who says he found the Indicated Horse-Power, owing to losses in the diagram from the friction of the indicator, to correspond with the *useful work* done by the engine.

The Indicator-Diagram. — The diagram itself shows only the pressure of steam acting on the piston at any and every part of its stroke; but from it may be calculated the mean effective pressure acting during that stroke, and it is assumed that the particular diagram measured is only a sample of what might have been taken at every stroke, so that the mean pressure thus calculated is the force acting on the piston during the whole period of its motion in which the power is taken—usually one minute. Hence, Indicated Horse-Power = area of piston in inches × mean pressure in lbs. per square inch × number feet travelled through by the piston per minute ÷ 33,000.

This, of course, applies only to double-acting engines, as in single-acting engines the pressure is acting only half the time on the piston, and hence, instead of taking the number of feet travelled through by the piston per minute as the multiplier,—*the length of stroke in feet* × *number of strokes per minute* should be substituted.

Mean Pressure. — The mean pressure is usually obtained by dividing the indicator-diagram by a number of equidistant ordinates perpendicular to the atmospheric line, and so placed that the distance of the first and last from the extreme limits of the diagram is half

the distance between two consecutive ones; the sum of their lengths, intercepted by the diagram, divided by their number, gives the mean length, and this, referred to the scale on which the diagram was drawn, will give the mean pressure. To illustrate this:—fig. 15 is an indicator-diagram whose length, A X, is, say, 5 inches, and taken with a spring requiring a pressure of 30 lbs. per square inch to compress it 1 inch; so that if M L is 2 inches, it represents a pressure of 60 lbs.; and if B L is $2\frac{1}{2}$ inches, it signifies that, at the point L, the pressure on the piston was $2\frac{1}{2} \times 30$ lbs., or 75 lbs. per square inch above the line A X, which, in this case, shall be *the line of no*

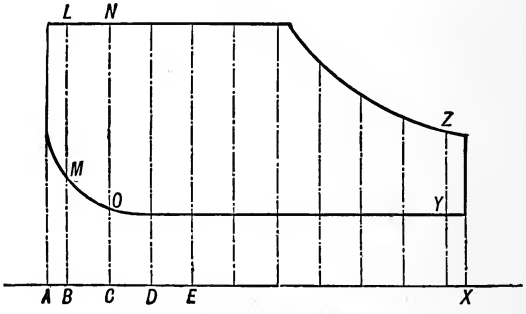

Fig. 15.—Indicator-Diagram.

pressure, and hence is 75 lbs. *absolute*, or 60 lbs. above the atmospheric pressure. Now, for convenience of division, let there be 10 ordinates enclosing 9 spaces—since there is to be a half space at each end, there will be in all equal to 10 spaces—so that the distance between the ordinates is 5 ins. $\div 10$, or half an inch. Measure off A B $= \frac{1}{4}$ inch; B C, C D, D E, &c., each $= \frac{1}{2}$ inch, and at B, C, D, E, &c., draw perpendicular lines, cutting the diagram at M L, O N, &c., Y Z. Then (M L + O N + &c. . . . . + Y Z) $\div 10 = x$ inches, and $x \times 30$ is the mean pressure of the diagram.

This diagram is from one side of the piston only, and, when one only is obtainable, it is sometimes assumed to represent both, and the mean pressure thus obtained used to calculate the power; but it seldom happens, although it is much to be desired, that the mean pressure is *precisely* the same on both sides of the piston, consequently, any result obtained in this way is not satisfactory. If the effective area of the piston is the same on both its sides—that is, if there is the same area on which the steam acts to propel the piston forward, on the one side as on the other—the mean pressure found from the diagram taken from the one side, may be added to that found from the diagram taken from the other, and divided by 2 to give the true mean pressure per revolution.

Professor Rankine shows that the diagram should be divided from A to N by ordinates equidistant apart, and the mean obtained

by the following rule:—Let n be the number of such divisions (usually 10), b_0, b_1 b_2 b_3 . . . b_n the lengths of the ordinates intercepted by the diagram: then

$$\text{Mean length} = \left(\frac{b_0 + b_n}{2} + b_1 + b_2 + \&c., \ . \ . \ . + b_{n-1}\right) \div n.$$

The chief objection to this is that, in actual practice b_n would be always without value, and b_0 either without value, or so difficult to measure as to cause differences of opinion as to its value.

Another, and a very ready way of obtaining the mean pressure, is by measuring the *area* of the diagram by a *planimeter*, and dividing it by the length A N, the result being the mean breadth as before, and this multiplied by the scale of lbs. of the spring will give the mean pressure. This is, of course, the quickest plan, and the most accurate, as being mechanical; and where many diagrams have to be calculated with despatch, it is very advisable to have a good planimeter. Special planimeters are now made for this purpose.

In whatever way the mean pressure be measured, it forms the basis of calculation of actual energy, or, as it has been called, Indicated Horse-Power, and is therefore of the utmost importance, since most modern formulæ bearing on marine machinery and marine propulsion are based on I.H.P. Hence, any error in taking the diagrams must lead to errors in design from calculations by formulæ based on false premises; this should always be borne in mind by the operator, on whose skill and care a good and true diagram depends as much as on a good instrument. It would be a very valuable quality in an indicator, to be able to give the *useful work* of the engine, as was stated by Mr. Hirn to be the case generally; but it is a quality which no instrument can possess, inasmuch as, with the same *cylinder performance*, there may be a great variety *of actual performances* of the engine, depending on the efficiency of the various parts, and the indicator only gives this cylinder performance. Could the effective power of the engine be easily obtained, a great benefit would be conferred on engineers and others, both in making calculations for speed, &c., and in determining the best make and design of engine. The *precise* power absorbed in overcoming the resistance of the working parts of an engine cannot be measured; for if the engine be allowed to run without load, it is not running in the *same* state as when running with its load; and any diagrams taken then cannot show what is the loss from friction, &c., on the guides and journals when running with the increased pressure on them due to the increased pressure on the piston with the load. Since the efficiency of an engine very much depends on the resistance on guides and journals, any calculation or formula which excludes, or does not give due allowance to this, is utterly valueless and misleading. Hence, it is false to assume that the power absorbed by an engine

in overcoming its resistance is measured by the power indicated when running without load, — as it is possible for the most efficient engine to show a very low efficiency when tested in this manner.

Efficiency of the Engine.—The efficiency of the marine engine is affected by causes which may be classed under three headings, viz. :—

I. Losses as a "heat" engine.

II. Losses as a machine.

III. Losses due partly to mechanical defects and partly to physical causes.

I. As a Heat Engine, its efficiency will depend in great measure on the limits of temperature between which it works. The lower limit is fixed from practical considerations at about 160° Fahr., being the temperature due to 5 lbs. pressure *absolute*, which is as low as is convenient for the expansion of steam in a compound engine, and lower than generally obtains in practice. If steam of 80 lbs. gauge pressure, or 95 lbs. absolute, be expanded eight times, the terminal pressure will be about 12 lbs. absolute theoretically, and about 10 lbs. in practice; the temperature corresponding to 10 lbs. absolute is 193° Fahr., and that corresponding to 95 lbs. is 324°. An engine working under these circumstances will be working between the limits of 324° and 193°, absorbing, so to speak, 131° and rejecting 193°, or rejecting more than it absorbs. Such are the conditions on which the great bulk of marine engines are working when at "full speed," and when working most economically they absorb another 30° of the 193° otherwise rejected. The loss is not so great, however, as appears at first sight, for since the condensed steam is (by means of the surface condenser) returned to the boiler as feed-water, at a temperature of 120°, it is only so far as *temperature* is concerned 73° at full speed and 43° at economical speeds.

But the steam engine differs from the *theoretical* heat engine in the fact that the *gas*, steam, is converted into the *liquid*, water, in the cycle of operations; and to effect that change it must be robbed of its *latent* heat, or that heat which was consumed in overcoming the molecular attraction of the water, and stored up as potential energy in the atoms of the steam. This amounts to 967° Fahr. at the boiling point, under atmospheric pressure, and 979° at 10 lbs. pressure absolute. Hence, when the ordinary marine engine is working with a boiler pressure of 80 lbs. and expanding the steam eight times, it rejects 193° apparent heat and 979° latent heat, or a total of 1172°, and returns to the boiler again 120°, leaving a balance of 1052° lost; so that each pound of steam gives up $1052° \times 772 = 812{,}144$ foot-lbs., or 24·6 horse-power.

In such an engine 2 lbs. of coal per hour will be required for each Indicated Horse-Power, and as each pound of coal will produce about 8 lbs. of steam, the quantity of steam per horse-power per hour will be $8 \times 2 = 16$; and the quantity per minute $16 \div 60$,

or 0·266 lbs. So that 1 lb. of steam from the boiler will produce only $1000 \div 266 = 3{\cdot}76$ horse-power in the cylinder; and when it leaves the cylinder it has potential energy equal to 24·6 horse-power, which cannot be utilised. The investigations as to the efficiency of the steam-engine as a heat engine have been fully gone into by Professor Rankine in his work on the *Steam Engine*, and should be thoroughly studied there. Although it is not a branch of the subject which need be dwelt on at any great length in a work of this kind, it is necessary to point out how great a loss takes place from this cause, to account for the apparent inefficiency of the engine when gauged by the consumption of fuel. No attempt to effect economy by saving this rejected heat has met with any great or lasting success.

The Steam and Ether Engine, in which ether was used to cool the steam in the condenser, so that the surface condenser for the steam became a tubulous boiler for the ether—which, when vaporised, did work in a second cylinder, and was itself condensed finally in a second surface condenser—was a success so far as utilising the waste heat is concerned; but it failed in practice, as can be easily imagined. Its success was based on the fact that ether vaporises at a temperature of 95° Fahr.

The most successful attempts, however, have been those of limited scope, such as making use of waste heat to raise the temperature of the feed-water, when a very small saving of heat is effected, but a great benefit obtained in the reduction of corrosion and pitting in the boiler. Seeing how little can be done at the lower limit of temperature, practical minds have concentrated their energy upon improving the efficiency of the engine by raising the higher limit of temperature.

Trevithick was the first engineer to move in this direction, and, notwithstanding that his engines were non-condensing, and his boilers far from being efficient generators, he succeeded in proving, by their superior economy of fuel over the low-pressure engines of Watt, that steam of high pressure could be used advantageously. This is easily seen when the limit of temperatures of the one kind of engine is compared with that of the other.

It has been stated that Watt expected a mean pressure of 7 lbs. per square inch, when using steam at atmospheric pressure, or 15 lbs. absolute. If the mean back pressure were 5 lbs., the cut-off of steam in the cylinder at about half of the stroke, 7 lbs. mean pressure would be obtained, and consequently the terminal pressure would be 7·5 lbs.; so that Watt's engine may be said to have worked between 180° and 212°, or with a range of 32° only. Trevithick, on the other hand, is said to have used steam at 60 lbs. pressure, and if his engines were arranged to cut off at half stroke, the terminal pressure would be $(60 + 15) \div 2$ or 37·5 lbs., and therefore would work between the limits of 263° and 307°, or with a range of 44°. Since, however, the steam at commencement of exhaust would, in this latter case, be at a pressure of 22 lbs. above that of

the atmosphere, it is probable that so shrewd an observer as Trevithick would perceive this to be very wasteful, especially in a county (Cornwall) having no coal mines, and he would, therefore, expand the steam more than twice. If he did so, even to the extent of three times, the terminal pressure would then be 25 lbs. absolute, and the limits of temperature 240° and 307°, thus getting a range of 67°, or more than twice that of Watt. In making this comparison round numbers only have been taken, and no allowance made for the warm feed-water obtained from the hot-wells of Watt's engine, as the data on which to make comparisons are wanting, especially those from the performance of Trevithick's engines. It is known that Trevithick joined with Woolf in introducing the compound engine, which system was probably suggested by the energy still possessed by the steam when exhausting from the engine invented by the former.

Since Trevithick's day the non-condensing engine has disappeared from competition with the condensing engine, both in pumping water from mines and in driving the propellers of steamships; but in the locomotive and other kindred engines it has been developed and remains unrivalled, because beyond competition with engines requiring condensers. Steam of higher pressures than he ever dreamt of is now being used both in condensing and non-condensing engines; and although at present the limit for marine engines of large power is about 200 lbs.* there are marine engines designed and working at 250 lbs. pressure, if not higher.

High-Pressure: its Advantages and Disadvantages.—Before the introduction of the compound engine, the boiler pressure had been as high as 60 lbs. in large steamers, notably in H.M. service, with the non-condensing engines of 200 N.H.P., fitted by Mr. John Penn, in some line-of-battle ships during the Russian war; but when the compound engine secured the confidence of all classes of steamship owners, that pressure was very much exceeded with beneficial results.

The objection to still higher pressures is one of a practical nature, and may, perhaps, some day be overcome, but at present it is very valid. Steam at a pressure of 250 lbs. absolute has a temperature of 401° Fahr., or nearly that of the melting-point of tin. It will, therefore, seriously affect the condition of the metals with which it comes in contact, rendering the surfaces of many brittle and in a bad condition to withstand rubbing. Moreover, all ordinary unguents are vaporised, and the walls of the cylinders become too hot to condense their vapour when exposed to so high a temperature; the usual vegetable packings for the stuffing-boxes of the rods char and burn; and the difference of expansion of different metals is so considerable, that the utmost care must be exercised in the design and manufacture of the cylinder, &c., to prevent leakages and breakages. The pressure necessitates considerable thickness in all cast-iron

* For triple expansion engines 165 lbs., and for quadruple expansion 180 lbs., is now common practice for even large engines.

work; and, neglecting all considerations of weight or cost, this alone constitutes a source of objection and danger, inasmuch as the sudden exposure of thick masses of this metal to high temperature on one side only is sure to distort, and very likely to fracture it. The liability to leakage is, of course, greater with the higher pressure, independent of temperature, and the danger to the attendants, from even small explosions, is very much increased. The temperature of the rods, &c., is too great to retain oil on their surfaces, and the heat communicated to the framing of the engine and connections must tend to distort it. Again, in order to expand steam at this pressure, so as to obtain from it the maximum power, it will be found necessary to use many cylinders; and although, as will be shown later on, the engine with three cylinders is not without virtue, a larger number will not commend itself to engineers generally for engines of the smallest and largest sizes. In practice, it has been found that an engine can be designed and worked with steam of the pressure mentioned, and can even perform a voyage across the Atlantic Ocean; still, the consumption of coal is not appreciably less than can be obtained with engines of the ordinary type, working with steam at a much lower pressure, and *in which expansion is at the same or even a lower rate.*

The advocates of very high pressures seem to overlook the fact, that a steamship owner has other means of testing the efficiency of an engine besides that of consumption of coal *per I.H.P.* The owner looks rather to the consumption of coal per ton carried, and he may find that the saving effected in the wear and tear account would often pay for a large amount of coal; further, while immunity from break-down and delay is a subject which no engineer can afford to dismiss under any circumstances from his serious consideration, in many services it is a matter of vital importance. To grasp thoroughly the value of such economies as may, under favourable conditions, be effected, take the case of an Atlantic steamer of 3000 I.H.P., doing a voyage in nine days. Suppose the nominal saving to be effected is two-tenths of a lb. per I.H.P., and that twelve voyages per annum are accomplished. The consumption of fuel should consequently be 600 lbs. per hour less, and the coal saved in a twelvemonth should be 1,392 tons, which at 12s. 6d. per ton amounts to £870. On the other hand, the wear and tear and store account, with engines and boilers using steam of 250 lbs. pressure, will be considerably more than with engines of the same power working at 150 lbs. This, together with the interest and depreciation on the extra cost of the machinery, will probably exceed the above sum of money.

By superheating the steam the temperature is raised very considerably beyond that due to the pressure, and in this way the limit of temperature was extended without increasing the pressure. Steam treated in this way was capable of considerable expansion without liquefaction resulting, even in unjacketed cylinders; and, as the extra heat supplied to the steam was what would otherwise

have been wasted, considerable economy was effected in engines using superheated steam.

II. Efficiency of the Engine as a Machine.—The marine engine suffers loss, in common with all machines, from certain physical causes beyond the *absolute* control of the most skilful designer, and engineers can only aim at mitigating the evil, without entirely overcoming it. The chief cause of loss of energy is, of course, friction, (1.) of the piston, (2.) of the stuffing-boxes, (3.) of the guides and slides, (4.) of the shaft journals, (5.) of the valves and valve-motion. Another source of loss is that from the resistance of the pumps; and, finally, must be mentioned the inertia of the moving parts, which have a reciprocal action, as in the piston and rods. Unless the momentum is balanced, or the energy imparted at one part of the stroke and stored in the heavy moving masses, is given out wholly by the end of the stroke, a serious loss ensues, and the mechanism has to sustain the strain of forces which might be usefully employed.

1. The Friction of the Piston in the vertical engine depends on the pressure of the packing on the sides of the cylinder; so that, if the piston were solid and simply a good fit, there would theoretically be no friction, and in practice none beyond that due to the viscidity of the unguent and to the pressure on the sides of the cylinder from the rolling and general motion of the ship. This is what is required in a piston, and that one is most nearly perfect which is capable of moving steam-tight in the cylinder with least pressure of the packing, and so approximates to the condition of a solid one. Resistance due to this cause has been reduced to a minimum in modern engines by care in manufacture and skill in design; the cylinder is now truly and smoothly bored from end to end, the metal, which should be hard and close-grained, soon becomes polished and glazed, and in the best possible condition for smooth working; the packings of the piston are metallic, and latterly the methods of pressing out the packing-ring such as to ensure a uniform and even pressure of small magnitude. The loss from packing the pistons too tightly may become very great, and too much care cannot be exercised in attending to this most important part of the engine.

In horizontal and diagonal engines, the *weight* of the piston pressing on the side of the cylinder causes friction, and as the cylinder wears in consequence more on the bottom than the top, it gets out of shape, thus necessitating more pressure on the packing-ring to maintain steam-tight contact, and thereby increasing the friction. The arrangements necessary for carrying the weights of the piston prevent all the better forms of piston rings and springs from being adopted in horizontal engines; so that the friction of pistons alone renders this engine less efficient than the vertical form. The most important improvement effected of late years, tending to the better working of horizontal engines, has been the making of the piston of steel; in this way the weight has

been very materially reduced, and the strength increased in the same proportion; the *prevention* by this plan is better than the *cures* attempted by guide-rods, &c.

2. **The Friction of Stuffing-Boxes.**—Since the use of the higher pressures of steam this has become a very considerable factor in the consideration of engine efficiency. It is extremely variable, and depends so much on the care and judgment of the attendants, that, however carefully these parts may have been designed and constructed, their good working is entirely beyond the control of the designer. Various attempts have been made to use metallic packing, and with success when in the hands of careful engineers; but, in the hands of careless men, there is more danger with it than with the old and new forms of vegetable packings. That the resistance may be very considerable is proved by the fact that some trunk engines can be stopped by tightening the trunk glands, and even in the ordinary piston-rod engine the speed may be seriously retarded by the same process. The glands should never be so tight that the rods are rubbed absolutely dry in passing through them. For the efficient working of the engine it is better that a faint leakage of vapour should pass out with the rod, as that is generally an indication of the packing being only tight enough, and the moist vapour lubricates the packing, and keeps it soft when of vegetable composition.

3. **The Friction of the Guides and Slides** is now, perhaps, the least important in the everyday experience of the losses to which an engine is liable; as those parts may be said to design themselves, and they are in such a position as to command the attention of the engineer; they are also, as a rule, easily lubricated. In most classes of engines the piston-rod guide is the chief one for consideration, and since, from the form of the rod-end, it is nearly impossible to give too small a surface to the *shoe*, it is seldom found, even in badly designed engines, to give much trouble; but in certain forms of engine this is not always so, and then care has to be taken both in designing and attending to the guides. The maximum pressure on the piston-rod guide of a marine engine is usually from two to three-tenths of the load on the piston, and supposing the ratio of maximum to mean to be 1·50, and the co-efficient of friction, under good circumstances, probably not less than 0·05, then

$$\text{Resistance of guide} = 0{\cdot}01 \text{ to } 0{\cdot}015 \times \frac{\text{load on piston}}{1{\cdot}50},$$

which means that from two-thirds to one per cent. of the energy of the piston is of necessity consumed in overcoming the friction of this one guide.

Improvements in the manufacture, and choice of suitable metals for guides, have very sensibly diminished the loss from this cause; besides which, the pressure on the guides is reduced by making

the connecting-rod longer in proportion to the stroke. When cast iron has become, by rubbing, *glazed* on the surface, there is no material better for guides. However, as some engineers will not wait for, or do not trust to, this state of metallic surface, but prefer the rubbing surface to be of a softer nature than the rubbed, it is not unusual to find white metal fitted to the "shoes." That some of the older engines were inefficient from loss at the guides, is proved by the rapid wearing of the shoes; the work necessary to convert so many cubic inches of metal into powder being the measure of avoidable loss at that point.

4. **The Loss from Friction at the Shaft Journals** is also very considerable, as the pressure on the piston is transmitted from the crank-pin to them, in addition to that caused by the weight of the shaft itself and the connections. The same may be said of the crank-pins, which have pressing on them the whole force on the pistons, in addition to the weight of the rods. This friction is very severe, especially in fast-running engines. *Friction is independent of velocity*, so far as movement through a fixed distance is concerned; that is, if a body be moved through 10 feet, the friction is the same if the movement takes place in 1 second or in 10 seconds; but if time be taken into account, the friction of moving the body ten times over the 10 feet in 10 seconds is ten times that of moving it *once* in 10 seconds. In a marine screw engine making seventy revolutions per minute, the friction is seventy times that of one revolution; and, consequently, if a paddle engine, having the same size of cylinders, and working with the same pressure of steam, makes only thirty-five revolutions per minute, its friction of journals will be half that of the screw engine. As the first screw engines working without gearing were generally designed by men whose experience had been gained with the slower working paddle engines, it is not astonishing to find that the bearings were not always sufficient for the work on them, and that the speed of the rubbing surfaces prevented the lubrication from being so efficient as had been the case previously, and so aggravated the evil. Again, the old paddle engine and geared screw engine had cylinders of longer stroke compared with their diameters than had the direct-working screw engine, and as the diameter of the shaft depends on the area of piston and length of stroke combined, while the pressure on the bearings depends only on the area of the piston, the diameter of the shaft might remain the same, although the size of the piston had been very much increased. Now most of the old rules for length of journals took cognisance of the diameter of shaft only, and although the pressure on the journals might have been doubled, there was only the same surface to take it.

For example, a paddle engine of 5 feet stroke might have the same diameter of shaft as a screw engine of 2 feet 6 inches stroke, each having the same cylinder capacity; but the engine with the short stroke would have a piston area twice that of the long stroke, and consequently with the same steam pressure there would be

double the strain on the journals, and this with generally double the number of revolutions of the shaft.

Friction is also independent of surface; that is, if there is a normal pressure on a guide of 1000 lbs., the friction is the same whether there be 1 square inch or 10 square inches of surface taking the pressure; but, in practice, if there were only one square inch, the unguent would be squeezed out partially or wholly, and the friction of metal on metal dry is very different from the friction when wetted or oiled. The aim of the engineer is to prevent metallic surfaces from coming in *actual contact*, for the friction is then very severe, soon causing the surfaces to abrade and even strike fire: he succeeds if he can introduce between them a thin film of oil or grease, and preserve it there. But there is a limit to the viscidity of unguents, and if this exceeds a certain limit, the unguent is pressed out, and the surfaces become dry.

Friction in the journals must always remain, therefore, as a source of anxiety to the engineer; but the complaint of hot bearings is not so common a one now as it was formerly. This improvement has been obtained by giving more bearing-surface in the journals and crank-pins, so that even thinner oils can be used, if necessary, in lubricating them; the crank-shafts are more truly turned by the improved machinery now used in their manufacture; the foundations of the engines are more *stiffly* made, so that there is no springing at the bearings, and the caps or keeps are also more substantial, and consequently stiffer, so preventing "springing" of the "brasses;" and lastly, the metal of both journals and "brasses" has been improved, the former in quality, and the latter in nature by the introduction of the white metals and bronzes.

5. The Friction of the Valve-motions, and the valves themselves, is very considerable at all times, and sometimes, when the valves are not well lubricated, becomes very severe. Even when the pressure on the valves is partly relieved by rings, &c., on the backs, the strain on the valve-rods is sometimes so great as to bend them when starting the engine. The increased piston-velocity, compared with that of the older engines, has necessitated larger ports, and consequently larger valves; and the increased boiler pressure has at last driven most makers of marine engines to the adoption of the piston-valve, which is to some extent a reversion to the old practice of the long and short D valves. Of course, the old D valves were not, strictly speaking, piston-valves, inasmuch as the face was flat; but they were much better balanced than any form of slide-valve since. That the friction of the valves is much greater in modern engines than in the old forms, is manifest from the fact that the rods and gear for driving them is far heavier than that in the old engines.

Attempts have been made from time to time to replace the slide-valve in its various forms with circular equilibrium valves, after the manner of the Cornish pumping engine; but although to some extent success has attended the attempts, it has not been so assured as to cause others to follow the example thus set. If steam of the high

pressures spoken of before is to be used with full advantage, no doubt some similar valve will have to be employed, to admit steam to both the first and second cylinders, and to exhaust it from the first to the second.

6. Loss from the Pumps.—In all engines, whether condensing or non-condensing, there is a loss of efficiency as a machine for revolving the propeller by the resistance of the feed-pumps, and, in case of a condensing engine, the additional loss from the air and circulating pumps; there is also the loss from the bilge-pump. In the case of the feed-pump, where the energy expended in forcing the water into the boiler is only stored up, as the water in a hydraulic accumulator has stored up energy, the loss is only that due to the inefficiency of the pump, and loss through friction in the moving parts working that pump. To some extent the same is true of the air-pump, inasmuch as it abstracts water from the condenser, where the pressure is 2 lbs. per square inch, and forces it into the hot-well, where it is 15 lbs.; but in doing this the air-pump abstracts air and gases at 2 lbs., and delivers them at 15 lbs., without any benefit to the engine at all, so far as work is concerned; and the heat stored in these gases, beyond that originally possessed by them when first introduced into the boilers with the "fresh" feed-water, is lost.

The circulating pump renders up nothing of the large amount of energy expended on it, and therefore, viewed in this light, is a great impedimentum to the engine, and largely detracts from its efficiency; but as a means to an end it is a very valuable adjunct, and its introduction as such, with the surface-condenser, has conduced very much to the economy of the marine engine. It is not only in the pump itself that energy is wastefully employed, but through this pump is passed the water which conveys away the largest loss of the whole engine. It has been proposed to utilise the otherwise lost energy exerted on the pumping of the water by directing the stream towards the stern of the ship, so that the reaction at the discharge orifice may be employed to propel the vessel forward. No doubt this would add to the efficiency of the engine; but hitherto practical engineers have been deterred from carrying it out by one or two practical difficulties, the getting-over of which would not, it is thought, be sufficiently repaid by the increase in efficiency.

7. The Loss from the Inertia of the Moving Parts.—This may be large or small, according to the care exercised by the attendants and the skill of the designer. The losses from this cause are, of course, greatest in the horizontal engine, and least in the vertical. The piston in a vertical engine has energy stored in it during the up-stroke, and when at the top of its stroke, its *potential* energy or stored-up work is equal to its weight in pounds, multiplied by the length of the stroke in feet: this work is given out during the down-stroke, and so there is no loss theoretically. If, however, the piston is not brought gradually to rest, by a due amount of cushioning of the steam remaining in the cylinder after the communication

with the exhaust is closed—so that the surplus work which the piston has to dispose of, when arrived at the top of its stroke, is used in compressing the steam—this surplus work will be employed in either lifting the shaft, if it is loose in the journal-bearings, or stretching the bolts, &c.—in either case wasting energy. If the valves are so set that there is sufficient cushioning to bring the piston to rest without shock, there will be no loss from this cause. The same is, of course, true of the action on the down-stroke.

In the horizontal engine the energy stored in the piston at the commencement and middle part of the stroke is to a great extent given out during the latter part, and the piston brought to rest by cushioning, as in the vertical engine. This action of the piston is the same in the vertical engine, and is due to the pressure on it during the earlier part of the stroke being in excess of the mean pressure, and the twisting moment also continually increasing beyond its mean value, so that the motion of the shaft is being accelerated, and energy stored in the heavy piston, which shall be given out again, as the action of the steam during expansion decreases in power, so as to prevent undue retardation of the crank-pin. Any energy remaining in the piston must then be taken up by cushioning, or there will be the loss as before mentioned. But in the case of the horizontal engine, the momentum of the pistons causes severe racking strains on the engine framing, and from it to the frames of the ship, from the position in which the cylinders stand with respect to their frames, and which, unless balanced, would cause in time serious damage. The balancing is effected by placing heavy weights on the shaft opposite the crank, so that their motion is always in a direction opposite to that of the piston.

Since the number of revolutions of horizontal engines has been largely increased and the lighter steel pistons used, balance weights on the cranks have been given up.

It will be seen from the foregoing that the energy lost in a marine engine is not a definitely fixed quantity, and is dependent neither on the design nor on the construction alone, but rather on the degree of care exercised by those who have the working of it. That much may be saved by careful designing and good workmanship is evident; but within certain limits a good engine may prove less efficient than one of inferior manufacture from lack of proper attention from those in charge of it, and from the want of suitable lubricants.

III. The Losses due partly to Mechanical Defects and partly to Physical Causes are those which cannot be classed as belonging to the engine as a machine, nor to it as a heat engine alone, and have therefore been put on one side in discussing the efficiency of the marine engine under those headings. The most important of these is a consequence of the employment, in the construction of the engine, of metals having good conducting power for heat. The steam-pipes are made of copper, and are, therefore, comparatively thin, so that,

independently of the quality of the metal for conveying heat, a loss by radiation from the exposed surface, unless otherwise prevented, is sure to take place. Copper being a metal of exceedingly high conductivity, heat is rapidly conveyed from the steam to the outer surface, and if this is exposed freely to the atmosphere the loss becomes very great. The loss, too, is not limited to mere heat alone; for if the steam is saturated, that is, containing as much water as possible, any abstraction of heat will cause a condensation of a portion of the steam into water, which, on coming into the cylinder, causes an obstruction to the steam, and has to be forced by the piston through the escape or cylinder safety-valves into the engine-room, or through the ports into the exhaust passage. The loss from this cause is easily appreciated by the engineer, as it reduces very materially and visibly the speed of the engine. Loss is sustained in the same manner, and from the same causes, in the cylinder and casings, but not to such a large extent, owing to the metal of those parts being much thicker and of lower conductivity. This loss is reduced as much as possible by casing these surfaces over with a material of very low conducting power; but, as no material refuses absolutely to convey heat, there is always some slight loss from this cause, however carefully the coverings are applied.

Liquefaction also takes place on expansion of the steam in the cylinder after "cut-off," unless it is *superheated* before admission, or receives additional heat from without during that process. Although there is no *direct* loss from this cause, there is an indirect one; first, by the tendency to cool the mass of steam below the normal temperature on admission to the cylinder; and, secondly, by obstructing the piston, as stated before. The heat abstracted from the steam on admission to the cylinder by the moisture caused by condensation during expansion, is not altogether lost, as some of it is given off again to the steam when it has so expanded that its temperature is below that of this moisture. But as this takes place just before emission into the exhaust, what is gained then is of much less value than that lost at the beginning, especially in the simple or expansive engine, which emits directly into the condenser; whereas in the compound engine the exhaust steam from the high-pressure cylinder, thus superheated, is capable of doing work better with the addition of heat than without it. It is for this reason that a compound engine can work so well without steam-jackets or superheating of any kind.

To avoid loss in this way, it is necessary to supply the steam with sufficient heat to maintain itself as vapour during the whole time it is in the cylinder. Engineers have effected this by superheating the steam before entering the cylinder—that is, by charging it with more heat than that necessary for vaporisation, and so thoroughly drying it as to make it have the properties of a perfect gas; and also by surrounding the cylinder with a casing or jacket containing steam or hot-air, from which the steam can receive the necessary addition of heat during expansion. The former plan is

not now generally adopted, and the latter plan is by no means general, especially in compound engines. The great practical advantage of the steam-jacket is the prevention of the formation of water in the cylinder *itself*, whereby the piston is obstructed, and not so much the gain in energy from the prevention of liquefaction of the steam. The steam condensed in *the jackets* does not prevent the good working of the engine, and the water can be blown into the hot-well, and used as feed-water, instead of into the bilges and wasted, as is often the case with unjacketed cylinders.

The use of superheated steam has been discontinued since the pressure has gone beyond 60 lbs. per square inch, partly in consequence of the increase of temperature beyond that due to the pressure being prejudicial to the good working of certain parts, partly also to the danger and inconvenience of the superheater itself, and not a little to the action taken by the Board of Trade with respect to it.

Another source of loss is the resistance due to the friction of the steam in passing through the pipes, passages, and valves; and although here again there is not a total loss, still it is not compensated for in the way that the engineer desires. As friction causes heat, so the friction of the steam along the surface of the pipes and passages generates heat; but since this heat is not allowed to escape, it is taken up by the steam, and so superheats it. The loss due to this cause in the steam-pipes is probably very small, especially when the pipes are of such a size that the velocity of steam through them is not excessive, and Mr. D. K. Clark has found that it is inappreciable when the velocity is not more than 130 feet per second with very dry steam, and 100 feet per second with ordinary dry steam. The greatest loss is when the steam has to pass through narrow orifices where the perimeter of such orifices is large compared with the area, as is the case at the steam ports of a cylinder; this is called "wire-drawing" the steam, and there is always a loss of pressure from this cause, even when the area through which the steam passes is equal to that of the section of the pipe through which it has previously passed. When the area is reduced, and the perimeter is large, the loss is, of course, still greater, and hence the loss at the ports of a cylinder, where the cut-off is early by means of a common slide-valve, is very considerable, and may amount to as much as 10 per cent. of the pressure, unless the ports are very large, or the travel of the valve exceptionally long. To obviate such an evil, the double and treble ported valves are used, and other plans adopted, whereby increased area of opening to steam may be obtained. If care is taken so as to avoid all unnecessary obstructions to the passage of the steam in the pipes and stop-valves, and there be sufficient opening of the port at the beginning of the stroke, the loss of initial pressure should not exceed $2\frac{1}{2}$ per cent., and in some marine engines there is no appreciable fall of pressure from the boiler to the cylinders. There is also a loss of energy when the steam enters the cylinders

from the sudden change in velocity, which will be from 150 feet to 10 feet per second in large engines, and even greater in small engines, where the piston velocity is very much less than 10 feet per second. This cannot be avoided in any way, as it is practically impossible to increase the piston velocity to even one-half that of the steam; and it would be excessively inconvenient to increase the area of ports, &c., so that the velocity of steam should more nearly approach that of the piston. But as the loss from this cause is very slight indeed, no extra cost expended in attempting to avoid it would meet with an adequate return.

A considerable amount of heat is lost by the radiation from those parts which are alternately exposed to the hot steam and to the atmosphere; and this was especially great in trunk engines, where the surface of the trunks is very large, and, being hollow, of course have the inner surface giving off heat as well constantly. Fortunately, the surfaces of the piston-rods, trunks, &c., soon become highly-polished, and so do not radiate the heat so quickly as they would were they rough. This loss, too, cannot be avoided, or even reduced to any appreciable extent.

Finally, there is the loss due to the heat conducted from the cylinders, pipes, &c., to the other parts of the engine with which they are connected, and which pass it away by radiation at their surfaces.

CHAPTER III.

RESISTANCE OF SHIPS AND INDICATED HORSE-POWER NECESSARY FOR SPEED.

Although, strictly speaking, it is not the province of the engineer to determine the power necessary to drive a ship at a certain speed, but rather that of the naval architect, still it is a point of great importance to the engineer, and one with the investigations of which he should be fully acquainted. Circumstances sometimes require, indeed, that the engineer shall name the power, as the naval architect may submit that, inasmuch as he is unaware of the efficiency of the particular engine to be supplied, he cannot say what *indicated* horse-power will be necessary, but only what *effective* horse-power. Moreover, the subject is one possessing great interest at all times, and sometimes of the utmost importance to the engineer, as the deficiency of speed obtained at the measured mile from that anticipated, may be attributed to the inefficiency of the engine and propeller. This charge may be, and often has been, proved to be true; but, on the other hand, it may be without foundation, the blame really belonging to the designer, who has given the ship lines unsuited to the speed.

Value of Trial Trips.—Trial trips are now conducted, both in the mercantile marine and the Royal Navy, with more care and interest than obtained formerly; and it is not sufficient to prove at the measured mile that the ship has done the speed expected, or that the engines have developed the power for which they were designed. Both engineers and naval architects anxiously determine whether the speed has been obtained with the minimum of power, and the engineer can satisfy himself on a most important point—viz., the efficiency of the propeller, and, to some extent, the efficiency of the machinery, while the owner, if it be a private ship, is enabled to judge whether he is paying for "big horses" or "little horses." Another point (and one most important to the owner) which, to some extent, is determined on a trial trip, is—at what expenditure of fuel a ton of displacement is carried over a mile. It is not an uncommon thing to find that the engine which burns least fuel per I.H.P., does not compare so favourably with others when measured by this latter standard. The apparent contradiction here is not very difficult to understand when fully looked into; it may be, perhaps, best comprehended by taking extreme cases. Suppose the blades of the screw are set so as to have *no* pitch; the engine will work, develop a certain power necessary to overcome its own resistance and that of the screw, but it will not drive the ship an inch; the coal consumption per I.H.P. will probably be somewhat heavier than that of the same engine when working with half its load, but still may be light. Now place the blades fore and aft, so that the pitch is infinity, and although there may be now a large development of power, there will be no appreciable speed—theoretically, none at all. In both these extreme cases, the consumption per I.H.P. may be very satisfactory, but the satisfaction would not be felt by the owner. It is manifest, then, that between these two extreme limits of pitch there is some value and one position of blade which will give the best result, so far as economy of fuel for load propelled is concerned. Not only is the pitch of propeller an important function in all calculations relating to the speed of ships, but the diameter has a very important bearing also on the subject, and more than was generally thought previous to the remarkable trials of H.M.S. "Iris."

The Resistance of a Ship passing through water is not easily determined beforehand, as it may vary from more than one cause, and in a way often unanticipated, as has been seen during the trials of the very fast torpedo boats. The investigations of the late Dr. Froude on this subject have shown that the older theories were sometimes erroneous, and the old established formulæ unreliable; and perhaps the best source of information on the intricacies of this somewhat complex subject is to be found in the many able papers read by him before the Institution of Naval Architects and other learned societies.

When the screw or paddle first commences to revolve, the ship makes no headway, and it is only after some seconds have elapsed

that motion is observable. The engine power has, during that period, been employed in overcoming the resistance to motion which all heavy bodies possess, and which is called the *vis inertia*. When the engine is stopped at the end of the voyage, the ship will continue to move, and come gradually to rest, unless otherwise retarded by the reversal of the engine or by check ropes. The ship is then said to have "way on her," a phrase which, in scientific language, means that she possesses stored-up energy, called *momentum*, which is given out, when the engine stops, in overcoming the resistance of the water to the passage of the ship through it. This energy was stored up at starting in overcoming the inertia, and remains stored until there is any retardation of velocity. In this way the weight of the ship helps to preserve an uniformity of motion, as that of a fly-wheel does to an engine, and therefore it is important that tug-boats should have weight as well as power, to prevent towing in the jerky fashion so often observable. When the *vis inertia* has been overcome, the power of the engine is directed to overcoming the resistance of the water, and wind, if there be any, and in accelerating the velocity of the ship; as the speed increases, the resistance much more increases, until the surplus power available for acceleration becomes *nil*, and the whole engine power is absorbed in overcoming the internal resistances, or those belonging to the engine itself and the propeller, and the external, or that of the ship.

The Resistance of the Water is Twofold.—First, the ship in moving forward has *to displace a certain mass of water of the same weight as itself*, and the water has to fill in the void which would otherwise be left by the ship. The work done here is measurable by the *amount* of water, and since it is equal to the displacement of the ship, displacement becomes a factor in the calculations of resistance. But to effect this displacing and replacing of water with the least amount of energy, it is necessary to do it gently—to set the particles of water gradually in motion at the bow, and let them come gradually to rest at the stern. If it is not done gently, and the water is rudely separated, a wave is formed on either side, showing that energy has been spent in raising the water of this wave above its normal level. Although every ship, however well designed to suit the intended speed, causes these waves of displacement, it is the object of the naval architect to reduce their magnitude as much as possible.

The second cause of resistance to the passage of a ship through the water, is the friction between the surface of the ship and the water. Resistance from this cause is generally spoken of as *skin resistance*, and is in well-formed ships much greater than the resistance due to other causes. However fine a ship may be, there is, of necessity, a certain area of skin exposed to the water, and though the displacement be very small indeed, and the section transverse to the direction of motion reduced to a minimum, it is found that a considerable amount of power is required to propel the ship through the water, and that, roughly, the power is proportional to the

wetted surface at the same speeds. It is from this cause that the older rules for speed, involving only displacement, or area of midship section, together with speed as variables, are found to be so misleading.

Speed Formulæ.—It will be easily understood that the magnitude of the waves of displacement depends both on the form of the ship and the speed at which she is propelled. But, again, the form of the ship depends, to some extent, on the displacement, and it roughly expresses the degree of fineness; so that it may be taken to measure both the *amount* of water displaced and the method of displacing it. Hence it was found that the resistance varied as $\sqrt[3]{(\text{Displacement})^2}$, or generally expressed as $D^{\frac{2}{3}}$. The resistance also varies as the square of the speed, and to complete the expression, which will give a definite value to the resistance of a given ship, it was necessary to multiply the product of the above two variables by a quantity found from practice; and if the law were absolutely correct, this quantity should have a fixed value, whatever the size and form of the ship, and would be a "*constant*" multiplier for all cases. If D_1 be the displacement in pounds, S_1 the speed in feet per minute, R the resistance in foot-pounds per minute, A the constant, then

$$R = D_1^{\frac{2}{3}} \times S_1^2 \times A.$$

Multiply both sides of this equation by S_1, then

$$R \times S_1 = D_1^{\frac{2}{3}} \times S_1^3 \times A.$$

Now $R \times S_1$ is the work done in overcoming the resistance R, through a distance S_1, and is, therefore, the power required to propel D_1 at a speed S_1, and if B is the efficiency of the machinery and propeller combined, so that $B \times \text{I.H.P.}$ is the effective horse-power employed in propelling, then

$$33{,}000(B \times \text{I.H.P.}) = D_1^{\frac{2}{3}} \times S_1^3 \times A$$

$$\text{I.H.P.} = (D_1^{\frac{2}{3}} \times S_1^3) \times \frac{A}{33{,}000\ B}.$$

Now, it is more convenient to express the displacement in tons and the speed in knots per hour; so that if D and S be substituted for D_1 and S_1, D being equal to $D_1 \div 2240$, and $S = (S_1 \times 60) \div 6080 = S_1 \div 101{\cdot}33$, it involves the introduction of other constant quantities, which do not, therefore, alter the expression, so that the whole of these constants may be replaced by a single constant, C, which will express them. Therefore

$$\text{I.H.P.} = \frac{D^{\frac{2}{3}} \times S^3}{C}.$$

D being the displacement in tons; S, the speed in knots per hour, and C, the so-called constant. It was also supposed that the resistance would bear a direct relation to the area of section transverse to the direction of motion, as this would be the measure of the channel swept out by a ship: hence the following rule:—

$$\text{I.H.P.} = \frac{\text{area of immersed midship section} \times S^3}{K}$$

K being also a so-called constant.

The above two rules were, for many years, the only ones used by shipbuilders in determining the necessary power for a given speed. Their partial accuracy depended on the fact that the wetted skin varies very nearly with the displacement in ships of somewhat similar form,* and that the proportions of steamships were such that the wetted skin varied nearly with the area of immersed section. Their usefulness depended on the information in the hands of the user, and on his discretion in choosing values for C and K. These rules are still used by many naval architects, and are not altogether set aside by any, as in experienced hands they form a good check on the newer methods, and can be used by themselves with fewer data than are required when rules based on wetted-skin are employed. Actual values for C and K are given in Tables I. and II., on pages 54–56, deduced from the performances of ships on trial trips made with every care; and in choosing values discretion must be exercised that the ship for which a calculation is to be made is somewhat similar in form, size, and speed, to the one whose constants are selected.

For the guidance of the inexperienced, the following may be taken roughly as the values of C and K under the varying conditions expressed:—

General Description of Ship.	Speed, Knots.	Value of C.	Value of K.
Ships over 400 feet long, finely-shaped,	15 to 17	240	620
,, 300 ,, ,,	15 ,, 17	190	500
,, ,, ,,	13 ,, 15	240	650
,, ,, ,,	11 ,, 13	260	700
Ships over 300 feet long, fairly-shaped,	11 ,, 13	240	650
,, ,, ,,	9 ,, 11	260	700
Ships over 250 feet long, finely-shaped,	13 ,, 15	200	580
,, ,, ,,	11 ,, 13	240	660
,, ,, ,,	9 ,, 11	260	700
Ships over 250 feet long, fairly-shaped,	11 ,, 13	220	620
,, ,, ,,	9 ,, 11	250	680
Ships over 200 feet long, finely-shaped,	11 ,, 12	220	600
,, ,, ,,	9 ,, 11	240	640
Ships over 200 feet long, fairly-shaped,	9 ,, 11	220	620
Ships under 200 feet long, finely-shaped,	11 ,, 12	200	550
,, ,, ,,	10 ,, 11	210	580
,, ,, ,,	9 ,, 10	230	620
Ships under 200 feet long, fairly-shaped,	9 ,, 10	200	600

* *Note.*—Let L be the length of edge of a cube just immersed, whose displacement is D and wetted surface W. Then

$$D = L^3 \text{ or } L = \sqrt[3]{D},$$

and

$$W = 5 \times L^2 = 5 \times (\sqrt[3]{D})^2.$$

That is, W varies as $D^{\frac{2}{3}}$.

Co-efficient of Fineness.—To determine the form of a ship, as to whether it is "fine," "fairly fine," or "bluff," it is usual to compare the displacement in cubic feet with the capacity of a box of the same length and breadth, and of depth equal to the draught of water; the co-efficient by which the capacity of such a box must be multiplied to give the displacement being called the *co-efficient of fineness*. Thus

$$\text{Co-efficient of fineness} = \frac{D \times 35}{L \times B \times W},$$

D being the displacement in tons of 35 cubic feet of sea-water to the ton; L, the length between perpendiculars in feet; B, the extreme breadth of beam in feet; and W, the mean draught of water in feet, less the depth of the keel. Strictly speaking, the length should be measured from the stem to aft part of body-post on the water-line, instead of to aft part of rudder-post; but as this dimension is not easy to ascertain without referring to the plans, and the calculation is made for the sake of comparison, rather than as an accurate computation, no inconvenience will arise from this, so long as all the ships under comparison are measured in the same way.

It will be easily seen that the above co-efficient only expresses a relation between the cubic contents of the immersed portion of the ship and a box of the same dimension, and gives no certain clue to the fineness of the *water-lines*, which is really what is wanted for consideration in dealing with the question of power for speed.

Two ships may have the same dimensions and the same displacement, and, consequently, the same co-efficient of fineness, and yet one may have bluff lines and the other fine—the difference arising from the latter having a flat floor, and the former a high rise of floor. To take an extreme case, the fine ship might have a rectangular midship section, and the bluff one a triangular one; and if the "co-efficient of fineness" was 0·5, the bluff ship would have rectangular water-lines, while those of the fine ship would be two triangles base to base.

Now, if a co-efficient be obtained by comparing the displacement with the volume of a prism, whose base is the midship section, and height the length of the ship, it will indicate the general fineness of water-lines, and form a guide in the choice of the constants for speed calculations.

$$\text{Co-efficient of water-lines} = \frac{D \times 35}{\text{area of immersed mid section} \times L}.$$

Finely-shaped ships have a co-efficient of fineness of about 0·55, and a co-efficient of water-lines of about 0·63; fairly-shaped ships 0·61 and 0·67; ordinary merchant steamers, for speeds of 10 to 11 knots, 0·65 and 0·72; cargo steamers, for speeds of 9 to 10 knots, 0·70 and 0·76; and modern cargo steamers of large size, as much as 0·78 and 0·83.

That the skin resistance is in small steamers the chief resistance, was long ago recognised, and many minds had been turned to give the subject serious consideration. It is seen on reference to the performance of very fine steamers running at high-speeds, that—notwithstanding the extreme care taken in the designing of the hull so as to ensure good results—the amount of power required seems excessive, when compared with that of ordinary steamers at moderate speeds. It follows that either the law of resistance varying with the square of the speed, is not true, and the formulæ for comparison at fault; or the ship and machinery have a low efficiency. Modern research and experiment with torpedo launches have shown that, at certain high speeds, from some cause, the resistance increases at a lower rate than that of the square; but in the ordinary sea-going and river steamers, the reverse would seem to be shown, as the constants are very low at the full speeds, and higher at the "half-power" speeds, although still low compared with ships designed to steam at the same speed as given at the half-power trials. This apparent anomaly arises in great measure from the fact that the old rules, as given, take no direct account of the wetted skin, and indirectly only so long as ships are of very similar forms. This can be understood by comparing two ships of similar dimensions, the one with fine hollow entrance lines, and the other with fuller and convex lines. The latter ship will not be suitable for very high speeds, but at moderate speeds the lines (though not so fine as those of the fine ship) will not prevent her from attaining *very nearly* the same speed with the same power as the fine ship. The displacement of the fine ship will be less than that of the other, and by comparing their performance by means of the formula (page 43), she will show to disadvantage. But on looking more closely into the matter, it will be found that the wetted skin of one ship is about the same as that of the other, and consequently the slightly higher speed of the fine ship, with the same power as the bluff ship, is appreciated, and is seen to be due to the finer entrance and more suitable water-lines. Again, fast steamers are usually long as a whole, compared with their midship section, and so when their performance is compared with that of shorter ships, it is to the advantage of the latter when judged by the formula (page 44). But since the commercial value of speed must bear some relation to the carrying capacity of a steamer, the old formula based on displacement still finds favour in the eyes of the owners of cargo ships.

Professor Rankine's Method.—The late Professor Rankine suggested a method of calculating the resistance of a ship, which was based on the resistance of the wetted surface, and which also took into account the fineness of the water-lines. It is as follows:—

Rule I.—Given the intended speed of a ship in knots; to find the least length of the *after-body* necessary, in order that the resistance may not increase faster than the square of the speed: take *three-eighths* of the square of the speed in knots for the length in feet.

To fulfil the same condition, the *fore-body* should not be shorter than the length of the after-body given by the preceding rule, and may with advantage be one and a half times as long.

Rule II.—To find the greatest speed in knots suited to a given length of after-body in feet, take the square root of two and two-third times that length.

Rule III.—When the speed does not exceed the limit given by Rule II., to find the probable resistance in lbs.: measure the *mean immersed girth* of the ship on her body plan; multiply it by her length on the water-line; then multiply by $1+4$ (mean square of sines of angles of obliquity of stream lines). The product is called the *augmented surface*. Then multiply the augmented surface in square feet by the square of the speed in knots, and by a constant co-efficient; the product will be the probable resistance in lbs.

Co-efficient for clean painted iron vessels, .	0·01
,, ,, coppered vessels, .	0·009 to 0·008
,, moderately rough iron vessels,	0·011 and upwards.

Rule III*a*.—For an approximate value of the resistance in well-designed steamers, with clean painted bottoms, multiply the square of the speed in knots by the square of the cube root of the displacement in tons. For different types of steamers the resistance ranges from 0·8 to 1·5 of that given by the preceding calculation.

Rule IV.—To estimate the *net* or *effective horse-power* expended in propelling the vessel, multiply the resistance by the speed in knots, and divide by 326.

Rule IV*a*.—To estimate the *gross* or *indicated horse-power* required, divide the same product by 326, and by the combined *efficiency* of engine and propeller. In ordinary cases that efficiency is from 0·6 to 0·625—average, say 0·613; therefore in such cases the preceding product is to be divided by 200 (Rankine, *Rules and Tables*).

Although the method here proposed has been found to give much more accurate and reliable results than those obtained by the older plans, it is open in practice to two very strong objections. First, it is necessary to have an accurate plan of the ship from which to measure the dimensions required; and second, it is difficult in actual practice to measure accurately the angles of obliquity of stream lines, and the calculation requires more time than can be devoted generally to the purpose. Often the horse-power requisite to drive a ship at a certain speed must be calculated at the time the lines are being got out, and it would be too late to wait for a plan of the ship before getting some idea of the power. Again, the size and fineness of a ship cannot be finally decided upon until the weight of machinery is roughly known; and, as this will depend on the power, it is necessary to approximate to it on very rough and ready information, for which rough and ready rules are more suitable than the more refined ones. Hence, the rules based on immersed midship section and displacement can be conveniently used

to obtain that approximation, and the power calculated accurately from the augmented surface afterwards.

Dr. Kirk's Analysis.—A method of analysing the forms of ships, and calculating the Indicated Horse-Power, has been devised by Dr. A. C. Kirk of Glasgow, and met with much favour on all sides. It is very generally used by shipbuilders on the Clyde and elsewhere for comparing the results obtained from steamers with those obtained from others, and likewise to judge of the form and dimensions of a proposed steamer for a certain speed and power.

The general idea proposed by Dr. Kirk is to reduce all ships to so definite and simple a form that they may be easily compared; and the magnitude of certain features of this form shall determine the suitability of the ship for speed, &c. As rectangles and triangles are the simplest forms of figure, and more easily compared than surfaces enclosed by curves, so the form chosen is bounded by triangles and rectangles.

The form consists of a middle-body, which is a rectangular parallelopiped, and the fore-body and after-body prisms having isosceles triangles for bases; in other words, it is a vessel having a rectangular midship section, parallel middle body, and wedge-shaped ends, as shown in fig. 16.

This is called a *block model*, and is such that its length is equal to that of the ship, the depth is equal to the mean draught of water, the capacity equal to the displacement, and its area of section equal to the area of immersed midship section of the ship. The dimensions of the block model may be obtained by the following methods:—

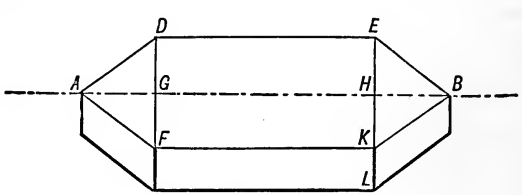

Fig. 16.—Kirk's Analysis.

Since A G is supposed equal to H B, and D F equals E K, the triangle A D F equals the triangle E B K, and they together will equal the rectangle whose base is D F and height A G. Therefore, the area A D E B K F equals E K × A H. The volume of the figure is this area multiplied by the height K L. Then the volume of the block is equal to K L × E K × A H. But K L × E K is equal to the area of mid section, which is by supposition equal to the area of immersed midship section of the ship, and the volume of the block is equal to the volume displaced by the ship. Hence,

Displacement × 35 = immersed midship section × A H;

or,

A H = displacement × 35 ÷ immersed midship section.

Now

H B = A B − A H, and A B = the length of the ship.

Therefore, the length of fore-body of block model is equal to the length of the ship, less the value of A H as found above.

Again, the area of section K L × E K is equal to the area of immersed midship section, and K L is equal to the mean draught of water. Therefore,

E K = immersed midship section ÷ mean draught of water.

Dr. Kirk has also found that the wetted surface of this block model is very nearly equal to that of the ship; and as this area is easily calculated from the model, it is a very convenient and simple way of obtaining the wetted skin. In actual practice, the wetted skin of the model is from 2 to 5 per cent. in excess of that of the ship; for all purposes of comparison and general calculation, it is sufficient to take the surface of the model.

The area of bottom of this model = E K × A H.

The area of sides = 2 × F K × K L = 2 (A B − 2 H B) × K L = 2 (Length of ship − 2 length of fore-body) × mean draught of water.

The area of sides of ends = $4 \times K B \times K L = 4 \sqrt{H B^2 + H K^2} \times K L = 4 \sqrt{\text{Length fore-body}^2 + \text{half breadth of model}^2} \times$ mean draught of water.

The angle of entrance is E B L; E B H is half that angle; and the tangent E B H = E H ÷ H B.

Or, tangent of half the angle of entrance = half the breadth of model ÷ length of fore-body.

From this, by means of a table of natural tangents, the angle of entrance may be obtained.

The block model for ocean-going merchant steamers, whose speed is from 14 knots upwards, has an angle of entrance from 18 to 15 degrees, and a length of fore-body from 0·3 to 0·36 of the length.

That of ocean-going steamers, whose speed is from 12 to 14 knots, has the angle of entrance from 21 to 18 degrees, and the length of fore-body from 0·26 to 0·3 of the length.

That of cargo steamers, whose speed is from 10 to 12 knots, has the angle of entrance from 30 to 22 degrees, and the length of fore-body 0·22 to 0·26 of the length.

Dr. Kirk measures the length from the fore-side of stem to the aft-side of *body-post* on the water-line. This is an unnecessary refinement when screw steamers alone are being compared, as then the length may be taken as that "between perpendiculars." However, when small or moderate size screw steamers are being compared

with paddle-wheel steamers, it may be necessary to measure in this way.

To find the Indicated Horse-Power from the Wetted Surface.—In ordinary cases, where steamers are formed to suit the speed as indicated above, the number of horse-power per 100 feet of wetted surface may be found by assuming that the rate for a speed of 10 knots per hour is 5, and that the quantity varies as the cube of the speed. For example,—To find the number of Indicated Horse-Power necessary to drive a ship at a speed of 15 knots, having a wetted skin of block model of 16,200 square feet:

$$\text{The rate per 100 feet} = \left(\frac{15}{10}\right)^3 \times 5 = 16{\cdot}875.$$

$$\text{Then I.H.P. required} = 16{\cdot}875 \times 162 = 2734.$$

When the ship is exceptionally well-proportioned, the bottom quite clean, and the *efficiency of the machinery* high, as low a rate as 4 horse-power per 100 feet of wetted skin of block model may be allowed.

It was observable that ships of H.M. Navy required a large amount of Indicated Horse-Power for their wetted skins, notwithstanding their exceptionally fine lines and smooth bottoms, a fact which would, at first sight, lead to the belief that the large I.H.P. was due to the extreme beam for the length, when compared with ships of the merchant navy. As a rule, the ratio of length to breadth in the merchant service is much larger than in warships; and because the speed constants of the latter are much lower than those of the former, it is urged that long, narrow ships are much easier to drive than broad ones; but this is not of necessity true, and the cause of difference between the two types of ship is not far to seek when carefully looked for.

It is true that the wetted surface of a warship is larger in proportion to her displacement than that of a merchant ship, from the fact that the warship has a greater rise of floor, often a deeper keel, and large bilge-keels or rolling chocks, all of which tend to add to the skin considerably without adding much to the displacement. But although this increase of wetted surface undoubtedly adds to the resistance, and so would account for low constants by the old rules, it is not a sufficient explanation for the high rates per 100 feet of wetted surface.

The friction of the water per square foot of surface may vary slightly with the pressure, so that the resistance from a square foot near the water-line may be different from one 20 feet below it, and as the ships of the Navy usually *draw more water* for their displacement than do merchant steamers, and the keel and bilge-keels are near the bottom, the average pressure per square foot of their surface will be greater than the latter. But it will be seen that, after all due allowance has been made for this, the perform-

ance of the best naval ship was still far behind that of a well-designed merchant ship; and since the ship had had every care bestowed upon the designing, and all allowance had been made for the causes above indicated, it was necessary to seek for the loss in some other direction.

The gross Indicated Horse-Power includes, of course, the power necessary to overcome the friction and other resistance of the engine itself and the shafting, and also the power lost in the propeller. In other words, Indicated Horse-Power does not show by itself, and is, therefore, no measure of the *resistance of the ship*, and can only be relied on as a means of deciding the size of engines for speed, so long as the efficiency of the engine and propeller is known definitely, or so long as similar engines and propellers are employed in ships to be compared. The former is very difficult to obtain, and although a glimpse at the efficiency of machinery may be obtained, as will be shown later on, it is nearly impossible in practice to know how much of the power shown in the cylinders is employed usefully in overcoming the resistance of the ship. Two notable examples from among a great many will illustrate how the efficiency of the *propeller* may vary. H.M.S. "Amazon," originally fitted with a four-bladed Mangin screw, ran 12·064 knots on the measured mile with 1940 Indicated Horse-Power. This result was deemed very unsatisfactory, and immediately after a two-bladed Griffith's screw was fitted, with which the ship made 12·396 knots with only 1663 I.H.P. Many years after this, H.M.S. "Iris" failed to obtain the speed for which she was designed, doing only 16·577 knots with 7503 I.H.P., with a four-bladed screw; but with a two-bladed Griffith's screw 18·587 knots was obtained with 7556 I.H.P., or 2 knots an hour more with the same power. Now, in both these cases four-bladed propellers were replaced by two-bladed Griffith's, and so it may be urged that it was the superior form of blade and the number of blades which made the difference; but in the merchant service four blades is the rule, and the Griffith's form is by no means universal. There was, however, one other point in common with the alterations to the two ships—viz., the pitch was increased when the Griffith's blades were fitted, so that the engines did not make so many revolutions per minute in the case of the "Amazon," and the number of revolutions per knot in the case of the "Iris" was less than before. This is a point very generally overlooked, and the *whole* of the improvement effected, instead of a part only, is thereby placed to the credit of the propeller.

The engines of a warship were generally horizontal, and of necessity of short stroke, and, in order that a *certain power* may be developed with a fixed weight of machinery, they must be run at a higher number of revolutions per minute than is usual in the merchant service; and hence, as pointed out in Chapter II., it is not surprising to find their efficiency very much lower than the long stroke, vertical, slow running engines of the merchant service.

The success of torpedo boats depends almost wholly on their

lightness of both hull and machinery, enabling them to do with so small a displacement that they literally skim the water, and the resistance per square foot of wetted skin is consequently comparatively small. Unless small boats are made to float at a very light draught they cannot be driven at high speeds, and all experiments with fast river steamers on the Clyde and elsewhere have shown this.

Progressive Trials.—It is usual now when a ship is being tried, to obtain more information than merely how much power is required to drive her at the highest speed. It has been found that it is quite as important to know how much power is expended at lower speeds; for from that knowledge an examination may be made into the efficiency both of ship and engines, jointly and separately, and valuable data obtained for guidance in dealing with future ships.

The system of examination is as follows:—Let $P_1 P_2 P_3$ be the power developed in obtaining the speeds $S_1 S_2 S_3$ in knots per hour with $R_1 R_2 R_3$ revolutions per minute. Take a line A N as a base line (fig. 17): on it take points B, C, and D, so that A B, A C, A D

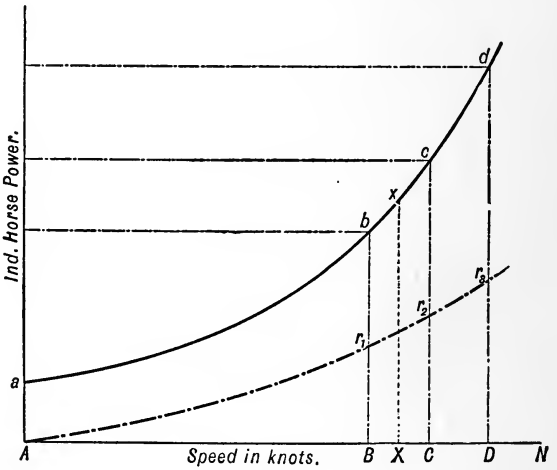

Fig. 17.

are proportional to $S_1 S_2 S_3$; at the points B, C, D erect ordinates, B *b*, C *c*, D *d*, so that they are proportional to $P_1 P_2 P_3$. Through the points *b*, *c*, *d* draw a curve, which is called the *curve of power*, or *curve of I.H.P.*, and it is such that if an ordinate be drawn through any other point, X, on the line A N, the part X *x* intercepted will measure the power corresponding to the speed measured by A X. If the curve is accurately drawn, it will be found that it does not pass through the point A, but above A, at a distance A *a*; this

would signify that when the engine was indicating the power measured by A a the ship would not move, and so A a is the amount of power required to overcome the resistance of the machinery and propeller at starting, or rather, when not propelling the ship, and hence A a is said to represent the *initial friction* of the machinery.

Curve of Revolutions.—A curve of revolutions is constructed in a similar way, by taking points r_1 r_2 r_3 on the ordinates, so that B r_1, C r_2, D r_3 are proportional to R_1 R_2 R_3. When the slip is *constant* the curve of revolutions becomes a *straight* line.

Curve of Slip.—The slip may be shown by a curve whose ordinates are proportional to the slip at the speeds S_1 S_2 S_3.

Examination of Curves will show—(1.) what indicated horse-power revolutions, and slip correspond to any speed intermediate to those observed; (2.) the efficiency of the engine at its *lowest possible speed;* and from it an idea may be formed of its general efficiency, and a comparison made with other engines; (3.) the efficiency of the ship, as tested by the rate of increase of power for speed, which is seen by the form of the curve towards the higher speeds—if it begins to mount upwards suddenly it is certain that the resistance has there begun to increase abnormally; (4.) that, if the curve is one fairly following the law of resistance increasing as the square of the speed, an estimate may be made from it of the power requisite to drive a similar ship at speeds higher than the highest observed curves, or lower than the lowest; (5.) any sudden rise in the slip alone indicates the propeller to be defective in either diameter or surface, or both.

Another method of expressing the results of progressive trials is by setting out A B, A C, A D proportional to S_1^3 S_2^3 S_3^3, and erecting ordinates, &c., as before. If the Indicated Horse-Power throughout varies as the cube of the speed, the "power curve," or line drawn through the points *b*, *c*, *d*, will be a straight line; and if the power increases at a higher rate than the cube of the speed at any point, the line will again assume the curved form. The advantages of this plan over the one before described, lie in the fact that a straight line is more easily drawn than any curve, that any deviation from a straight line is more easily detected than that of one curve from another, and that the production of a straight line is less liable to error than a curve, so that the interception of A a is less open to error than by the previous method. Of course, the curves of slip and revolutions cannot be examined so well by this latter method as by the former, and it is only the "power curve" that should be analysed in this way.

The values of the different "constants," rates, &c., for ships found from calculations made from the results of carefully conducted trial trips, are more reliable than those got by taking averages when employed in calculations for proposed ships. Table I. gives the values of constants, &c., as obtained from the performances of some well-known ships of various types and sizes.

TABLE I.—RESULTS OF TRIALS OF STEAM VESSELS OF LARGE SIZE.

Names.	H.M.S. Iris.	R.M.P.S. Connaught.	H.M.S. Inconstant.	H.M.S. Iris.	R.M.S.S. Britannic.	H.M.S. Agincourt.	S.S. St. Augustine.	S.S. Charles V.
Length, Perpendiculars, . . .	300′ 0″	327′ 0″	337′ 0″	300′ 0″	450′ 0″	400′ 0″	313′ 6″	313′ 6″
Breadth, extreme, ...	46′ 0″	35′ 0″	50′ 3½″	46′ 0″	45′ 2″	59′ 5″	33′ 6″	33′ 6″
Mean draught water, . . .	18′ 2″	13′ 0″	23′ 0″	18′ 2″	23′ 7″	24′ 2″	14′ 11½″	14′ 10″
Displacement (tons), . . .	3290	1900	5962	3290	8500	9071	2480	2478
Area Imm. Mid. Section, . . .	700	336	923	700	926	1185	422	420
By Kirk's System. Wetted Skin, ...	18,168	15,782	24,772	18,168	32,578	32,682	15,200	15,183
By Kirk's System. Length, Fore-body, . .	135′ 6″	129′ 0″	111′ 0″	135′ 6″	129′ 0″	132′ 0″	107′ 6″	107′ 6″
By Kirk's System. Angle of entrance, . . .	16° 16′	11° 26′	20° 24′	16° 16′	17° 16′	21° 0′	14° 56′	14° 56′
$\frac{\text{Displacement} \times 35}{\text{Length} \times \text{I. Mid Area}}$, . . .	0·548	0·605	0·615	0·548	0·714	0·669	0·658	0·658
Speed (knots), ...	18·573	17·8	16·51	15·746	15·045*	15·443	15·336	15·11
Indicated Horse-Power, . . .	7714	4751	7361	3958	4900	6867	2243	2062
I. H.-P. per 100 ft. wetted skin, .	42·46	30·00	29·70	21·78	15·04	21·01	14·75	13·50
I. H.-P. per 100 ft. wetted skin, reduced to 10 knots, . . .	6·634	5·32	6·60	5·58	4·42	5·71	4·09	3·91
$\frac{D^3 \times S^3}{\text{I. H.-P.}}$, ...	183·7	182	201	218·2	289·3	232·8	295	300
$\frac{\text{I. Mid Area} \times S^3}{\text{I. H.-P.}}$, ...	581·4	399	564	690·5	642·5	634·3	678	690

* Results obtained by taking the mean of eleven voyages at sea.

TABLE I.—*Continued.*

Names.	H.M.S. Active.	S.S. Garonne.	S.S. Salier.	H.M.S. Himalaya.	H.M.S. Hecla.	H.M.S. Tyne.	Booldana.	H.M.S. Tamar.
Length, Perpendiculars, . . .	270′ 0″	370′ 0″	351′ 0″	340′ 6″	392′ 0″	319′ 0″	320′ 0″	300′ 0″
Breadth, extreme, . . .	42′ 0″	41′ 0″	39′ 0″	46′ $1\frac{3}{4}$″	39′ 0″	34′ 0″	40′ 0″	44′ 7″
Mean draught water, . . .	18′ 10″	18′ 11″	17′ 9″	18′ 10″	21′ 4″	17′ 9″	18′ 3″	22′ 2″
Displacement (tons), . . .	3057	4635	3998	3857	5767	3445	4720	4300
Area Imm. Mid. Section, . . .	632	656	573	652	738	526	664	793
By Kirk's System. Wetted skin, ...	16,008	22,633	20,448	20,088	26,235	19,245	21,102	20,236
By Kirk's System. Length, Fore-body, . .	101′ 0″	123′ 0″	107′ 0″	133′ 0″	118′ 0″	90′ 0″	71′ 3″	110′ 0″
By Kirk's System. Angle of entrance, . . .	18° 44′	16° 4′	17° 16′	14° 42′	16° 30′	18° 38′	28° 38′	18° 24′
$\frac{\text{Displacement} \times 35}{\text{Length} \times \text{I. Mid Area}}$, . . .	0·629	0·668	0·694	0·611	0·698	0·712	0·771	0·634
Speed (knots), ...	14·966	13·80	13·01	12·5	12·054	11·59	11·797	11·60
Indicated Horse-Power, . . .	4015	2500	2180	1830	1758	1194	1788	1752
I. H.-P. per 100 ft. wetted skin, .	25·08	11·04	10·66	9·11	6·7	6·2	8·47	8·65
I. H.-P. per 100 ft. wetted skin, reduced to 10 knots, . . .	7·49	4·20	4·845	4·66	3·83	3·975	5·17	5·55
$\frac{D^{\frac{2}{3}} \times S^3}{\text{I. H.-P.}}$, ...	175·8	292	254	262·5	320	297	258	236
$\frac{\text{I. Mid Area} \times S^3}{\text{I. H.-P.}}$, ...	527·5	689	580	696·0	735	686	610	708·5

TABLE II.—RESULTS OF TRIAL TRIPS OF STEAM VESSELS OF MEDIUM AND SMALL SIZE.

Names.	P.S. Mary Powell.	P.S. A——.	P.S. B——.	P.S. C——.	P.S. John Penn.	P.S. Bosphorus	S.S. Harrar.	T.S.S. Folkestone	T.S.S. Houssa.	S.S. Torpedo.	S.S. Africa.
Length, Perpendiculars, . .	286′ 0″	227′ 0″	245′ 0″	202′ 0″	171′ 9″	150′ 0″	230′ 0″	190′ 0″	192′ 0″	90′ 0″	130′ 0″
Breadth, extreme, . . .	34′ 3″	29′ 6″	32′ 0″	21′ 0″	18′ 9″	19′ 0″	29′ 0″	25′ 0″	26′ 0″	10′ 6″	21′ 0″
Mean draught water, . .	6′ 0″	12′ 2″	12′ 0″	6′ 3″	6′ 9½″	6′ 10″	13′ 6″	8′ 0″	6′ 0¼″	2′ 6″	8′ 10″
Displacement (tons), . .	800	890	1378	435	280	299	1500	611	570	29·73	370
Area Imm. Mid Section, .	200	284	320	122	99	112·8	340	175	146 5	24 ?	148
By Kirk's System. Wetted skin, . .	8222	8186	9923	4986	3793	3602	10,075	5730	5667	903	3754
By Kirk's System. Length, Fore-body, .	143′ 0″	113′ 6″	94′ 3″	77′ 3″	72′ 0″	57′ 3″	79′ 6″	67′ 9″	55′ 6″	45′ 0″	42′ 6″
By Kirk's System. Angle of entrance, .	13° 21′	11° 53′	16° 4′	14° 21′	11° 30′	16° 24′	17° 0′	18° 20′	24° 43′	12° 40′	23° 50′
$\frac{\text{Displacement} \times 35}{\text{Length} \times \text{I. Mid Area}}$, . .	0·489	0·483	0·624	0·614	0·576	0·611	0·671	0·616	0·709	0·481	0·608
Speed (knots), . . .	17·20	15·21	14·50	14·78	15·3	14·0	10·04	13·00	10·558	22·01	10·74
Indicated Horse-Power, . .	1490	1300	1684	882	798	650	503	601	447	460	371
I. H.-P. per 100 ft. of wetted skin,	18·12	15·88	16·97	17·69	21·04	18·00	5·00	10·48	7·89	50·9	9·88
I. H.-P. per 100 ft. of wetted skin, reduced to 10 knots,	3·56	4·51	5·57	5·48	5·87	6·56	4·90	4·77	6·70	4·78	7·97
$\frac{D^3 \times S^3}{\text{I. H.-P.}}$, ...	293·7	250	227	207	192	189	266	259	180·7	223	172·8
$\frac{\text{I. Mid Area} \times S^3}{\text{I. H.-P.}}$, . . .	683	767	579	442	445	476	690	612	385·2	556 ?	495

Wetted Skin.—The method of obtaining the Indicated Horse-Power by allowing a certain rate per 100 square feet of wetted surface is by no means a new one, it having been used by some shipbuilders for very many years; but it is only recently that it has been generally used, and even now only tentatively by most designers, as it requires a considerable amount of accurate information to use with confidence, and a larger staff than is usual in drawing offices, to make the necessary calculations. Although not so accurate as, perhaps, may be considered necessary by some, Dr. Kirk's plan certainly commends itself to all from its simplicity and ease in calculation, and very little experience is sufficient to enable the naval architect to make the requisite allowances for all practical purposes. It will be found that the excess of wetted skin, as calculated from the block model, over that obtained by actual measurement, does not exceed 8 per cent., and it is only in exceedingly fine hollow line ships that so great a difference exists. Ships, as generally designed now-a-days, having fine lines, but not hollow to the extent that obtained in those constructed on the *wave-line* principle, will, as a rule, differ only by about 5 per cent., and ordinary sea-going steamers by only 3 per cent., while *full* ships will have a wetted surface within 2 per cent. of that obtained by calculation from the block model.

Sea Performance of Steamers.—That the engines may work economically, both in consumption of coal and stores, as well as in wear and tear, it is advisable to run them at such a speed that they develop about 80 per cent. of the maximum power. Steamship owners do not always care to pay for 25 per cent. more power than is requisite to drive their ships at the speed intended, but there can be little doubt that it is true economy in the end to do so. For short voyages there is not the necessity for a reserve of power, and very fast steamers could not afford to carry the weight entailed by any excess of power beyond the actual requirements; but ordinary sea-going steamers making long runs can, as a rule, easily do this without much sacrifice, and the wisdom of such a course would be shown by the saving in working expenses at the year's end.

Although, as a rule, trial trips are made honestly, and what the engine has done on the day of trial it can easily be made to do again, still, with the limited staff available for *continuous* service when the ship is at sea, there cannot be that attention devoted to the working parts which was bestowed by the staff of the manufacturer; and the application of water to the bearings and brasses to *prevent* heating, which is usually deemed absolutely necessary when the engine is running at full speed, cannot but affect those parts prejudicially, and is at all times a poor substitute for an attendant. Unless, then, the engine is run at a speed considerably below that of the trial trip, either a larger staff of engineers and attendants must be employed, or the wear and tear will be excessive. It is true, on the other hand, that some engines will develop more power after a voyage or two than was obtained on their trial trip, due to the

wearing down of rough surfaces of the guides and cylinder walls, and to the general "smoothing" of all the rubbing surfaces; but it is also true that even such engines should not be run for lengthened periods at their maximum power. The improvements in design and the employment of better materials for guides and bearings, however, admit of the more modern engines being worked at the full speed with less risk than was the case formerly; this is more especially the case with the three-crank engine.

CHAPTER IV.

SPACE OCCUPIED BY, AND GENERAL DESCRIPTION OF MODERN MARINE MACHINERY.*

THE choice of the particular type of engine for a particular service depends on many things beyond the control of the designer, and is governed by one or two considerations of paramount importance.

In large ships of moderate power, there is free scope generally for designing any particular style of engine which will give good results, or which, in the mind of the engineer, will best suit the conditions of the service; but in small ships, and large ships with large power, the utmost consideration is required in the choice of design, and the highest skill is necessary to work out successfully that design, so as to keep within the limits entailed by the ship's size and construction.

Space occupied by Machinery.—The first condition by which the engineer is bound, is the space occupied by the engines and boilers, and, in consequence of this, more ingenuity has been displayed in designing engines to occupy a minimum amount of room, than in almost any other direction. The beam of the ship decides the limit of engine-room in one direction, and the requirements of the shipbuilder and owner cramp it in the other. In the merchant navy there is little objection to engines occupying space vertically; but for warships, it is almost a necessity that they be wholly below the water-line or protected by armour. Paddle-wheel engines, which have the shafting in the direction of the beam of the ship, and are thereby limited only to the space occupied by the cylinders and their fittings, are not much affected by this limitation, inasmuch as, although there is sometimes too little room when placed side by side, the cylinders may be situated the one before, and the other abaft the shaft, acting on the same crank, or on separate ones. The stroke of a paddle-wheel engine is only of necessity governed by the dimensions of the ship when the cylinder is placed vertically, and the piston-rod connected directly with the crank-pin, or by means of an intervening connecting-rod. This is the case with the oscillating, and also with the direct-acting engine, the latter being seldom or never used for this purpose. The steeple engine, and other kindred forms, are only partially limited, as even in very shallow steamers there is height sufficient for a considerable length

* For particulars as to weight of Machinery, *vide* end of volume.

of stroke. The other forms of vertical paddle-wheel engine—side-lever, and overhead lever—*may have any length of stroke of piston.*

Long strokes of piston with the oscillating cylinder can always be obtained by placing it inclined in its mid position; and the direct-acting engine having very long stroke, can be employed in the same way. The vertical height of the shaft of a paddle engine above the bottom of the ship, depends on the diameter of the wheel, and the draught of water of the ship at the wheel; the diameter of the wheel depends on the speed of the ship and the revolutions at which it is to be run.

Breadth of Paddle-Wheel Engines.—The space athwartships of the oscillating engine is generally more than that of any other engine, on account of the room required by the trunnions and their connecting-pipes, as well as by the belts surrounding the cylinders; but notwithstanding this, it is seldom found that an engine of this type cannot be placed even in very narrow river steamers.

The following rules will be found to give approximately the minimum breadth of a paddle-wheel engine, measured over all athwartships *across the cylinders*:—

(*a.*)	1 Cylinder oscillating engine . . .	$B = 2{\cdot}0 \times D + 1{\cdot}0$ foot.
(*b.*)	2 ,, ,, ,, . . .	$= 4{\cdot}0 \times D + 2{\cdot}5$ feet.
(*c.*)	1 Cylinder diagonal engine . . .	$= 1{\cdot}25 \times D + 1$ foot.
(*d.*)	2 ,, ,, ,, . . .	$= 2{\cdot}5 \times D + 3$ feet.
(*e.*)	1 Cylinder steeple engine . . .	$= 1{\cdot}25 \times D + 1$ foot.
(*f*)	2 ,, ,, ,, . . .	$= 2{\cdot}5 \times D + 2$ feet.
(*g.*)	1 Cylinder side-lever engine . . .	$= 1{\cdot}5 \times D + 1{\cdot}5$ feet.
(*h.*)	2 ,, ,, ,, . . .	$= 3{\cdot}0 \times D + 4$ feet.

D is the diameter of the cylinder; when the engines are compound, *each* cylinder is to be multiplied by *half the multiplier* given in the above table.

For example, the breadth of a compound oscillating engine having cylinders *d*, and D diameter, $B = 2d + 2\ D + 2{\cdot}5$ feet.

It often happens, when the engines are of long stroke, that the breadth of the entablature, or frame containing the shaft-bearings, is more than that over the cylinders. This breadth is approximately 6 times the diameter of the crank-shaft for a single-cylinder engine, and 14 times the diameter of the shaft for engines with two cylinders, when there is no intermediate crank to work the pumps; when there is a crank or large eccentric for this purpose, the breadth is about 16·5 times the diameter of the shaft in the journals.

Length of Paddle Engines.—The distance of the cylinder end from the centre of the shaft is, of course, nearly proportional to the stroke, and is in oscillating engines much shorter than in diagonal direct-acting engines. This distance is given approximately, thus:—

(*a.*) Oscillating engine with single piston-rod, $L = 1{\cdot}5 \times S + 0{\cdot}7 \times D + 1$ foot.
(*b.*) Direct-acting ,, ,, ,, $L = 3{\cdot}5 \times S + 0{\cdot}6 \times D + 1$ foot.

S is the stroke, D the diameter of the cylinder, which in compound engines is that of the high-pressure cylinder.

Space is saved by fitting two piston-rods, which admits of the crank-pin brasses passing between their two stuffing-boxes; this is some-

times done, but the same economy can be effected in direct-acting engines in a simpler way. The space occupied by lever engines in a fore and aft direction is about three times the stroke of the piston + the diameter of the cylinder. In the other form of engines, where the cylinder is vertical, the space occupied by them depends in great measure on the condenser. The condenser of a diagonal engine is generally placed beneath it, so as to occupy no more space in the ship beyond that covered by the engine itself.

Screw Engines.—The shafting of *screw engines* is in the direction of the length of the ship, and, consequently, the axis of the cylinder or centre line of each engine will be in a plane at right angles to this, and may be vertical, horizontal, or inclined. If the machinery is to be kept under the water-line, it must be horizontal, or only slightly inclined to that position, while the length from centre of shaft to end of cylinder is limited to the half-breadth of the ship; and, in reality, owing to the rise of floor and round of the bilge, &c., the allowance usually falls far below this. Length of stroke is, therefore, necessarily short by comparison with vertical engines; although this latter class, when admissible in ships of war of deep draught, has also a short stroke. The vertical engine of the merchant ship may have exceptionally long strokes in large ocean steamers by making a high engine-room hatch on the upper deck, which hatch also adds to the safety of the ship; and, even in ordinary merchant steamers, the stroke may be longer than usually obtains, without necessitating any special arrangement in the ship. Roughly, the stroke of a vertical direct-acting engine for a merchant steamer is never less than the diameter of the high-pressure cylinder of the compound or the medium pressure cylinder of the triple compound, and may be as long as that of the low-pressure; while that of a horizontal engine, power for power, will be only about two-thirds of that of the vertical, and even so long a stroke as this was only admissible in ships of great beam, as was usual with armoured ships and cruisers which carry a large spread of canvas.

The Return Connecting-Rod Engine, of all the horizontal kinds, admits of the longest stroke, inasmuch as the cylinder front of it can be closer to the shaft than that of any other type: this distance being limited to the length from the centre of the shaft to the connecting-rod end at the crank-pin; this end of the connecting-rod passes between the two stuffing-boxes of the piston-rods, and hence from the cylinder to it, when at the end of the stroke there need be only sufficient space for safe *clearance*. Space in this class of engine is sometimes saved by *dishing* the piston, which admits of the cylinder front being concave towards the rod, and the cylinder itself so much nearer to the shaft. Of course, the cylinder-cover in this case will be convex outwards, and so the distance gained at the front is lost there; but the difficulty is to find space for the cylinder-cover and flange at the turn of the bilge, and by this arrangement such space is

obtained, and there is always plenty of room at the level of the centre of the cylinder. The connecting-rod with the piston-rod crossheads, &c., are on the side of the shaft opposite that of the cylinder, and there is never any difficulty experienced in finding room for them. It is usual (and, certainly, necessary) to fit a "tail-rod" or "trunk" at the back of the pistons of horizontal engines having cast-iron pistons, in order to relieve the cylinder bottom of their weight; such rods pass through stuffing-boxes in the covers, and have at their ends slipper guide-blocks supported on slides. There is sometimes a difficulty found in obtaining sufficient room for this apparatus in its most approved form at the aft engine, although generally the form of the sections of a warship admit of it. The general adoption of steel pistons has, however, now obviated the necessity for this.

Trunk Engines.—The distance of the front of the cylinder in these engines is considerably more than that on the preceding type, as there must be sufficient room for the trunk when *full out* to be clear, not only of the crank-shaft, but also when there are balance weights fitted to the crank-arms (as is usual) to be clear of these too. When there are balance weights fitted to the crank-arms, the distance of the cylinder front from the centre of the shaft, is longer by a distance equal to the length of the stroke in a trunk engine, than in a return connecting-rod engine. Again, for the same *area* of piston, the latter has a smaller diameter of piston than the former engine, and, consequently, with the same height of centre the stroke cannot be so long. The back trunk simply passes through a stuffing-box in the cover, and having no guides or appendages, there is generally room for it in the wings.

Length of Screw Engines.—The distance from the centre of crank-shaft to the back of cylinder-cover of horizontal engines is given approximately by the following rules:—

(*a.*) Direct-acting Engines . .	$L = 3{\cdot}5 \times S + 0{\cdot}6 \times D + 6$ inches.
(*b.*) Return Connecting-rod Engines	$L = 1{\cdot}6 \times S + 0{\cdot}8 \times D + 3$ inches.
(*c.*) Trunk Engines. . . .	$L = 2{\cdot}6 \times S + 0{\cdot}6 \times D + 6$ inches.

S is the stroke, D the diameter of the cylinder, which, in compound engines, is that of the high-pressure;—the length of the connecting-rod in the direct-acting engine is assumed to be twice the length of stroke.

The Space required in a Fore and Aft Direction for horizontal engines depends chiefly on the diameter of the cylinders, and the arrangement of the valve-boxes. If these latter are on the sides (that is, if the valve face is vertical), then, not only is room occupied by the boxes themselves, but space is required to admit of the doors being removed, and the valves withdrawn. This is somewhat reduced by placing the valve-box of the low-pressure cylinder between the cylinders, as is usual with vertical engines; but this arrangement is often very inconvenient, and not always admissible.

If the valve-boxes are placed on top of the cylinders, so that the faces are horizontal, much space is then saved, both in the engine itself, and in the room required for it.

The distance over the cylinders, from valve-box to valve-box, in the former case is

$$3\,D + 1 \text{ foot},$$

and in the latter case

$$2{\cdot}2 \times D + 6 \text{ inches},$$

both being for two-cylinder expansive engines; for compound engines, $1{\cdot}5 \times D + 1{\cdot}5 \times d + 1$ foot, and $1{\cdot}1 \times D + 1{\cdot}1 \times d + 6$ inches, where D is the diameter of the low-pressure cylinder, and d that of the high. The distance for three-cylinder engines, with the valves on top of the cylinders, may be found by allowing $1{\cdot}1 \times D + 3$ inches for each cylinder. Space is often saved by arranging the machinery so that the low-pressure cylinder of a compound engine is forward, instead of aft.

Diagonal Engines.—Any engine whose cylinders are not perfectly horizontal may, strictly speaking, be called *Diagonal.* Before vertical engines were generally received as the best type for mercantile purposes, many engineers showed a strong leaning to this particular arrangement; and, until solid crank-shafts could be obtained easily, it was one which commended itself highly for direct-working engines, as two engines at right angles to one another could work on the same crank-pin, which could be on a *crank-arm keyed to the shaft.*

The crank so fitted is said to be *overhung*, and is such as is generally used for land engines with success; but as marine engines have cylinders of larger diameter in proportion to the stroke than land engines have, the bending moment on both pin and shaft is very severe, and this was often the cause of break-down of the diagonal screw engine. The remedy was either to fit a solid crank, or else to add another crank-arm and shaft end to the existing one, when the engine worked safely.

Although diagonal engines are now seldom made, there are many features in the design which cause them to be still adopted in certain special cases. The room occupied in a fore and aft direction is only about one-half of what is required for the ordinary two-cylinder arrangement; the cylinders can, without shortening the length of stroke, be kept under the deck, and the whole of the weight and strain of the engine, when working, is taken directly on bearers attached to the framework of the ship. It is also a cheap and light engine, inasmuch as the crank-shaft and bed-plate are only half the length of those of the ordinary arrangement, and one pair of eccentrics only is sufficient to work the valves. The platforms, ladders, &c., for an engine of this type are also much less, and in many other ways economy is effected.

Some engineers have adopted, under special circumstances, a modification of the diagonal engine, in which one cylinder (generally

the low-pressure one of compound engines) was placed vertically over the crank, and the other either horizontally or slightly inclined, the condenser being placed on the opposite side; this method has been found to give good results, and where space in the ship is to be minimised, it will be found a very suitable arrangement. Yachts and small steamers of moderate power may often with advantage have diagonal engines; but in these cases there is the drawback that, the cylinders being under the deck, it is difficult to take the covers off, or to draw the pistons, &c., for examination and repair; and this objection—a very strong one even with moderate power—becomes absolutely prohibitive for large power.

Compound engines for warships have often to be slightly inclined, to accommodate them to the form of the ship, and allow of the low-pressure cylinder cover being taken off, and the piston withdrawn.

Inverted Direct-Acting Engine.—These engines are now universally adopted throughout the world as the most convenient, and, in every way, the best for mercantile ships; and although the varieties of the type differ in details and general arrangement, each manufacturer having his own particular design, yet the same main principle is developed throughout—viz., the cylinders are vertical, with their axes in a plane passing through the keel of the ship, and the piston-rod end is coupled direct to the crank-pin by a connecting-rod, whose length is now never less than twice the length of the stroke of the piston. The simplest form of this type consists of a single cylinder supported on two columns, having the condenser on one side of the foundation, and the starting gear on the opposite side, the connecting-rod operating on an overhung crank, and a fly-wheel on the shaft to regulate its motion. Such an engine occupies but little room in the ship, will work very well, and is cheap to construct when of small power.* It is usual for engines of this form to have a solid or two-armed crank to avoid the casualties so common with the older diagonal engines. The condenser, too, is sometimes placed centrally, with the tubes athwartship, so that the centre of gravity of machinery may be in the middle line of the ship.

Engines of this description are called *single-crank single cylinder.*

Single-Crank Compound Engine.—By placing one cylinder above the other, and connecting the pistons by a rod or rods, so as to operate conjointly through one connecting-rod on the crank, Mr. Alfred Holt constructed a form of engine which has given very great satisfaction, and by its continued success overcame the prejudice of all who have had experience with it. From being the "hobby" of an individual, it was adopted by one or two large steamship companies almost exclusively, and partially by many others. Its principal recommendations are obviously the little space it occupies, and the small number of working parts *liable* to

* Its suitability for large powers also has been tested by Mr. Alfred Holt, who had an engine of this type made with cylinder 40 inches in diameter and 66 inches stroke, worked by steam of 80 lbs. pressure per square inch.

become deranged or broken. The former is not always an advantage to the steamship owner, owing to the rules for measuring tonnage, as the 32 per cent. reduction could not easily be obtained with a single-crank engine. Nor, on the other hand, is the latter advantage always appreciated by the engineer as it should be, although it offers a guarantee of safety: in case of the breaking of a rod or pin, the whole of the machinery may be rendered useless, but with this form of engine, the number of such parts being reduced, there is a corresponding reduction of the chances of such a casualty happening. The introduction of the triple compound system has, however, caused the construction of this class of engine almost to cease. To compare the safety of the single-crank with that of the double-crank engine, it is necessary to look closely into the matter.

The condenser, pumps, shafting, and propeller being common to the two engines, they may be dismissed from consideration. In the single crank-engine there is, of course, only one crank, and if that breaks, the engine is totally disabled; the same happens in the double-crank engine if the after-crank breaks. There is only one connecting-rod, but it is an easy matter to place that beyond suspicion, by making it of ample size and good material; again, the connecting-rod bolts may break, but that argument can be met in the same way, and also by the fact that spare bolts are invariably carried with both forms of engine. If one piston breaks, the other is still capable of working, and the single-crank engine having a fly-wheel, is better able to propel the ship under such circumstances than the double-crank engine, and is as handy as before for starting and reversing. The link-motion and valve-rods may give way, and so render both cylinders useless, but the chances of the former doing so are a half those of the double-crank engine, while spare parts are not very expensive, and, moreover, are very often carried with both sorts of engines, and so on with all the remaining parts. The working-parts of the single engine, owing to their smaller number, receive more attention, both at sea and in port; and from their unusual size (in order to be symmetrical), some parts are abnormally strong, and so less liable to breakage. The consumption of oil and stores is smaller from the same causes, and their efficiency *at sea* higher, owing to the regulating action of the fly-wheel. Although the latter does not entirely do away with "racing," it very much reduces it, and enables a ship to work at *very nearly full speed* in a bad sea with very little waste of power, because the power expended by the engine when the screw is relieved of water, is nearly wholly stored in the fly-wheel, which gives it up again to great advantage when the stern descends, and the screw is deeply buried. The double-engine, when controlled by even the best of governors, *will* "race" somewhat, and power given out then is in great measure lost, owing to the want of *mass* in the working parts; and even if there be no "racing" at all, this is only effected by a reduction of the average power, because the engine is developing its propelling power during the time the screw is immersed, and between those times only sufficient power to over-

come internal resistance—in other words, during half the time steam is practically shut off.

It is often urged as a necessary condition that these engines must be "unhandy," but the reverse is the case in actual practice. When properly designed, these engines will very seldom stop on the "dead centre," and with a proper starting gear an experienced engineer will never allow it to do so. As the effort of *both* pistons is applied to the crank, if it be ever so little over the centres, the engine will start.

It is generally supposed that the cost of manufacturing the single is less than that of the double-crank engine, but a little reflection will show that this is not so. The boilers, condenser-pumps, propeller, pipes, valves, cocks, donkey-pumps, gauges, &c., are the same in both engines, as are also the pistons, slide-valves, covers, &c. True, there is only one crank, one connecting-rod, one link-motion, half the foundation, and fewer columns, &c., but, on the other hand, these are all very much larger and heavier than the corresponding parts of a double engine; the screw-shaft and tunnel shafting are very much heavier, and consequently the stern tube bearers, &c., are heavier, while the fly-wheel is an extra fitting, and the only set-off to it is the governor. There is nearly always an engine fitted to operate on the fly-wheel (in case the engine should by chance stop on the dead centre), and this, which is also employed to turn the engine in port, is an extra, and has only the turning-wheel and hand-gear of an ordinary engine as a set-off. A steam starting-gear is a necessity with the single crank-engine, and although this is not an extra for the large engines, it certainly is in the smaller sizes.

Two-Cylinder, Two-Crank, or Double Engine.—This was the most general form of commercial marine engine, and is the one that with fewest cylinders may have no "dead points," or positions of crank from which it cannot start without special assistance. The cylinders may be of the independent type, in which the steam works expansively, or they may be the high- and low-pressure cylinders of a compound engine. The latter was almost the rule, for although a few steamship owners adopted the two-cylinder expansive engine in preference to the compound, they did not continue to use them; very many of these engines having since had new compound cylinders fitted in place of the original ones, or been compounded by the addition above them of smaller cylinders, the pistons of which are secured to the top ends of the original piston-rods.

Three-Cylinder, Three-Crank, Engines are now almost invariably fitted into ships both of the mercantile and royal navies, and are on the triple compound system. (See figs. 18 and 19.)

Four Cylinder, Two-Crank, Engines.—Quadruple compound are also supplied by several makers. (See fig. 20, p. 73.)

Variations of Design.—Each manufacturer has a particular method as to details, but with one or two exceptions there is no radical difference in the general design. The principal exceptions to a fixed rule in general arrangement are, the position of the condenser

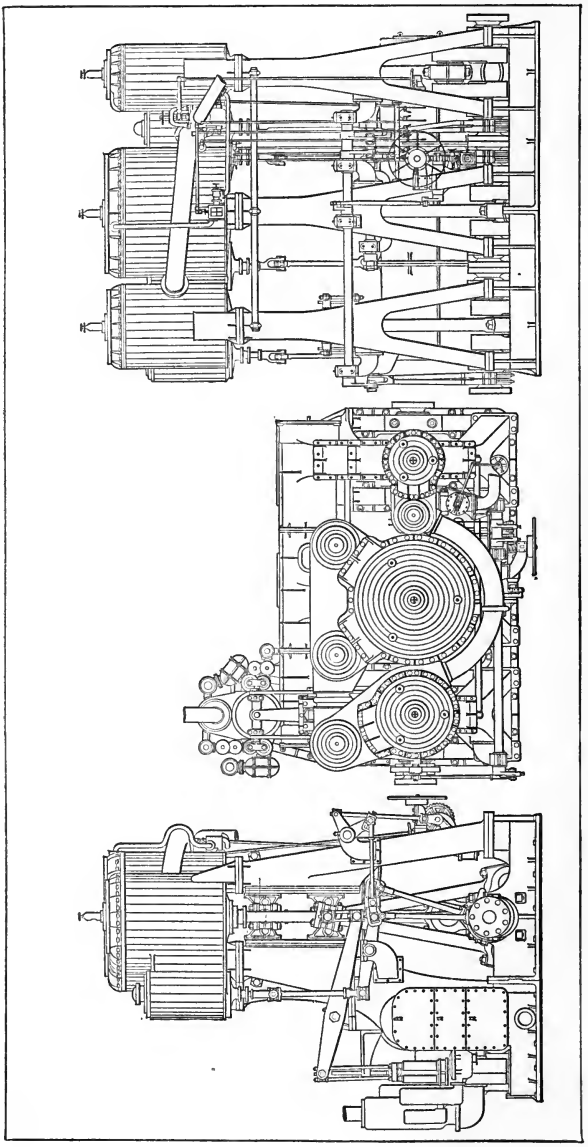

Fig. 18.—Three-Crank Triple Expansion Engine.

and its form, the position of the pumps, and the method of working them, the position of the cylinder valve-boxes, and the position and form of the supporting columns, &c.

The condenser is usually on one side of the engine, and so arranged as to form a base for the columns on that side, and a part of the engine base to which the foundation containing the main bearing is secured; sometimes even the condenser foundation and columns are made in one casting for engines of considerable power. A slight variation from this is effected by some manufacturers, who prefer having a continuous bed-plate (fig. 9) without the complicated casting above described, by making the condenser so as to stand on top of the engine foundation-plate. In both these designs, the condenser tubes are horizontal, and in a fore and aft direction, and a space is required at one end to draw them for examination, &c.; it is often difficult to provide such a space, and the convenience can only be obtained, in many cases, by taking off a plate from the engine-room bulkhead. To avoid this objection, the condenser is sometimes placed so that the tubes lie horizontally athwartship, and can be drawn between the two engines, on the removal of only a small amount of easily portable gear. When this plan is followed, it is usual for the condenser to be quite independent of the columns, which stand on either side of it with their feet secured direct to the engine foundation-plate. In the case of naval engines the condenser is quite detached from the engines and placed in any convenient position in the engine-room. On the whole, this is a very convenient arrangement, and overcomes other difficulties, besides that of drawing the tubes; for it admits of the engine being erected without the condenser being in place; the condenser may also be made much lighter, and of a simpler and less expensive construction and shape; and, as it forms no integral part of the structure resisting strain, deterioration in the metal from age, galvanic action, &c., does not endanger the engine.

If the condenser is placed on one side of the engine, the centre of gravity of the machine will be out of the centre line of the ship, unless it can be balanced by some other part. As this balancing seldom happens in ships which would be seriously affected by such a condition, some engineers have rectified the defect by moving the condenser as above described, until it is under the cylinders and central with them. This, again, necessitates the removal of all gearing from the middle of the engines, and as the cylinder valve-boxes are "outside," the working parts of one engine are hid from the view of the engineer when he is attending to the other. This has been obviated by making another removal of the condenser to the aft end of the engine, where it forms a support for the cylinder, and does not interfere with the position or view of the working parts. But whether the condenser be in the middle of the engine, or at the aft end, so long as it is central, and above the crank-shaft, it forms a very serious obstacle when this very important working part requires removal for examination or through defects, and at all times it is in the way of the main bearings which require

attention. To have a condenser which shall be central, and yet form no obstruction, Mr. William Allan patented an arrangement, in which it is *below* the shaft with the tubes athwartships, and forming a part of the engine foundation. The objection to the plan is the great height of shaft-centre necessitated by it; in addition to which it is urged, that the change of form caused by the different temperatures of the condenser, distorts the foundation, and puts the shaft-bearings *out of truth*, and that the bilge-water on the hot-condenser sides and bottom seriously corrodes it, besides causing foul smells in the engine-room; the exhaust-pipe, too, is of necessity longer than usual, and the discharge-pipes from all the pumps will have the same objectionable feature.

The condenser is sometimes arranged with the tubes vertical, and is then generally of cylindrical form, and has a column cast with it, so as to form a part of the engine framework; by this means, a cheap and compact condenser is formed, and one that admits of the tubes being drawn, when no other kind of design could be so arranged. This plan is especially favourable for yachts having good power, without a large amount of breadth of beam.

In large steamers, it is of very little consequence if the centre of gravity of the machinery is a little out of the centre line; and in those of moderate size, the condenser can always be balanced by some other fixed weight, such as the donkey-boiler; while, in small steamers, this can be effected by placing the boiler a very little way out of the centre line, on the side opposite to that of the condenser. Under these circumstances, it is not surprising that most engineers still design their engines with the condenser on one side.

The position of the pumps naturally depends very much on that of the condenser, and the method of working the pumps is not, as sometimes supposed, optional, but consequent on the position of these relative to the cylinders.

When the condenser is on one side of the engine, it is almost a necessity to have the pumps behind it; and the only convenient way of working them is then by means of levers, which obtain their motion from the piston-rod crosshead. As the condenser so placed is the most general arrangement, so the generality of manufacturers work the pumps by means of levers, the pumps being behind the condenser.

This is by far the most convenient method, as by it the pumps (which really require very slight attention compared with that bestowed on the shaft-bearings, rods, link-motion, &c.), are out of the way of all the working parts, and in that place on the engine where they are most easily examined, and also nearer to the inlet and discharge-valves, than they would be in any other position. The weight of the moving parts of the pumps helps to balance the weight of the pistons and rods, and although this is not of much consequence when the engine is running fast, it is very important when starting or moving slowly, and must at all times tend to make the engine run steadily.

When the condenser is placed in the middle of the engine, although not an absolute necessity, it is certainly by far the most convenient arrangement to have the pumps central, or nearly so, and worked *direct* from the piston crosshead; hence, it is usual to find in all *designs* of the kind, the pumps worked direct, and situated about the centre line of the engine. The objections to this plan are always of moment; but with long-stroke engines they become almost insurmountable. The pumps are always in the way of the attendants, and as the arms of the piston-rod crosshead are usually long, so as to keep the pumps as far away from the crank-shaft as possible, it is dangerous to approach the centre of the engine for fear of being guillotined. When the stroke of the engine is long compared with the diameter of the cylinders, it is impossible to get sufficient area through the buckets of the air and circulating pumps when single-acting, and at high speeds the concussion from the water is very great. The weight of the pumps and the crosshead is added to that of the piston, so that the downward velocity of the latter is naturally greater than that upward; and although this can be remedied by adjusting the steam supply, so that the engine runs steadily at full speed, there must always remain some slight difficulty at starting. As a set-off to this, the cost and friction of the levers and links are saved, but this is scarcely sufficient to counterbalance objections so serious as the above.

The pumps are sometimes worked by an independent engine, and may then be placed in any convenient position; but, in addition to the cost of such an engine, there is the objection that much room is occupied by it, and it is doubtful whether more power is not expended in doing the work, than would be the case if the pumps were worked in the usual way; they can, however, be worked at that speed suited to the exact requirements.

In the case of expansive engines, it was usual to arrange the cylinders so that both valve-faces came between them in such a way as to form a valve-box common to the two; this was a very convenient plan, and economical both in cost and space. It involved, however, the necessity of four bearings to the crank-shaft, and where the engines were small, it was no easy matter to do any work to the valve-faces when required. For these reasons manufacturers made them sometimes with the valve-faces outwards, as is usual with horizontal engines. When compound engines were first introduced, each maker followed the arrangement to which he was accustomed in expansive engines; but it was found that neither of the above plans permitted of a sufficient space for a receiver when the cranks were placed at right angles, and both had serious defects. When the faces were "outside," the exhaust-steam from the high-pressure had to traverse a comparatively long pipe to reach the low-pressure, and for the small volume of this pipe a very large surface was exposed to loss from radiation. When the faces were inside, there could not be a valve-box common to both, but each box was shut off from the other, and the temperature of one very much higher than that of

the other; the consequence was, that the engine centres were very much spread out, and the castings about the valve-boxes were often found to be cracked. This latter defect has, by care in design, been remedied, but there still remain the wide centres and the liability to leakage of high-pressure steam to the low-pressure valve-box without detection, except by the indicator, or the abnormal pressure in the receiver when the engines are "standing."

This latter plan was still preferred, however, by some engineers, and under some circumstances it is a very convenient one, especially so when the space into which the cylinders have to go is limited, and when the condenser is of necessity in the middle of the engines, or between the back columns with the tubes athwartship. To avoid the evils above mentioned, and to obtain a good receiver, most manufacturers place the valve-box of the high-pressure cylinder "outwards," and that of the low-pressure between the cylinders, and provide a belt around the high-pressure one for the steam to exhaust from it to the low. When the space between the cylinders is not sufficient for a receiver, this belt is made the whole length of the cylinder, and in this way space is provided, and the two cylinders are outwardly of the same size, or nearly so. The low-pressure valve-box cover is on top (in vertical engines), while that of the high is on front, and sometimes is provided with one on top as well.

In order to reduce the space occupied by the cylinders, and likewise to suit the requirements of certain special valve motions, the valve-boxes of both cylinders are placed on the front side of the cylinders, so that the faces are in a plane parallel to the keel. When this is so, the cylinders may be quite close together, and no space is required at either end of the engine-room casing for valve-boxes or to remove valve doors; the cranks are also arranged to come closer together, to suit the reduced centres of cylinders, by doing away with one of the middle bearings and the room for eccentrics. The only difficulty with this arrangement is to get space for a receiver and for the passage of the exhaust steam from the low-pressure cylinder to the condenser. The adoption of the three-crank triple-compound engine has developed a very large amount of skill and ingenuity in the arranging of both cylinders and valve-boxes, so as to minimise the length of engine.

The supporting columns differ in form and position as well as in material. The back columns, or those carrying the guides, are, as a rule, of cast iron, and of rectangular section, to suit the requirements. In naval engines they are generally of cast steel. The front columns, or those on the "starting" side, are seldom exactly the same with any two makers, and sometimes widely different. They may be cast iron and of hollow rectangular section (fig. 9), H section, or hollow cylindrical, or of wrought iron or steel, of circular section. When the latter, there are generally for large engines, one in wake of each main bearing; and two for small compound engines, one at each corner, and for three-crank engines of

small size three. The same rule applies to circular section cast-iron columns with some manufacturers. Rectangular section cast-iron columns are sometimes substituted for circular ones, when arranged in the same way as the circular section columns, to be in keeping with those at the back. Rectangular section columns for large engines, and H section for small engines, are generally placed opposite the back columns, and have guides on them in the same way as these latter. The guides on the back columns are usually the "ahead-going" ones; but as they are generally placed on the condenser, and, therefore, are apt to become warm, some engineers make those on the front columns do this duty by fitting a screw propeller of reverse thread. Columns, both back and front, are generally made to approach straight lines in outline, although some still have what are supposed to be graceful curves.

Three-Cylinder Engines.—To obtain a more steady motion at low speeds, and to reduce the *maximum* strain on the crank-shaft, it is necessary to introduce a third cylinder to the diagonal engine, and a third cylinder and third crank to the vertical and horizontal engine. Mr. Scott Russell introduced the three-cylinder oscillating engine for fast paddle steamers, and obtained very good results, although the arrangement was somewhat complicated. Messrs. Maudslay and Field used to make, for the British and foreign navies, many horizontal expansive engines, with three cranks set at angles of 120° with one another, and Messrs. Rennie some compound horizontal engines, having the two low-pressure cranks opposite one another, and the high-pressure crank midway between them. Several of the Scotch engineers followed the lead of Messrs. John Elder & Co., in making three-cylinder vertical engines. The modern triple-compound engine is nearly always on the three-crank principle, and consequently enjoys these advantages to enhance its performance. Independently of the advantages of getting steadier motion and reduced strains on the crank-shaft, there are other reasons which operate in making the three-cylinder arrangement a convenient, if not a necessary one. As a rule, the power of an engine is obtained more efficiently by one cylinder than by two, and by two than by three; but there is a limit of size and weight, beyond which both manufacture and examination when in the ship become extremely expensive and difficult, besides the attendant risk, and it is for this reason that manufacturers are compelled to go beyond the number of two cylinders. Power for power, the three-crank engine took up more room than the two-crank one, and, except in very large sizes, was more expensive to make; but the working parts, piece for piece, are lighter, and more easily made and handled in the ship; and it is of great importance to reduce the *maximum* strain on the shafts of very large engines, to keep them within the size which may be made with existing appliances, and to give them greater chances of endurance. The cranks are at angles of 120° with one another in the vertical engine, because

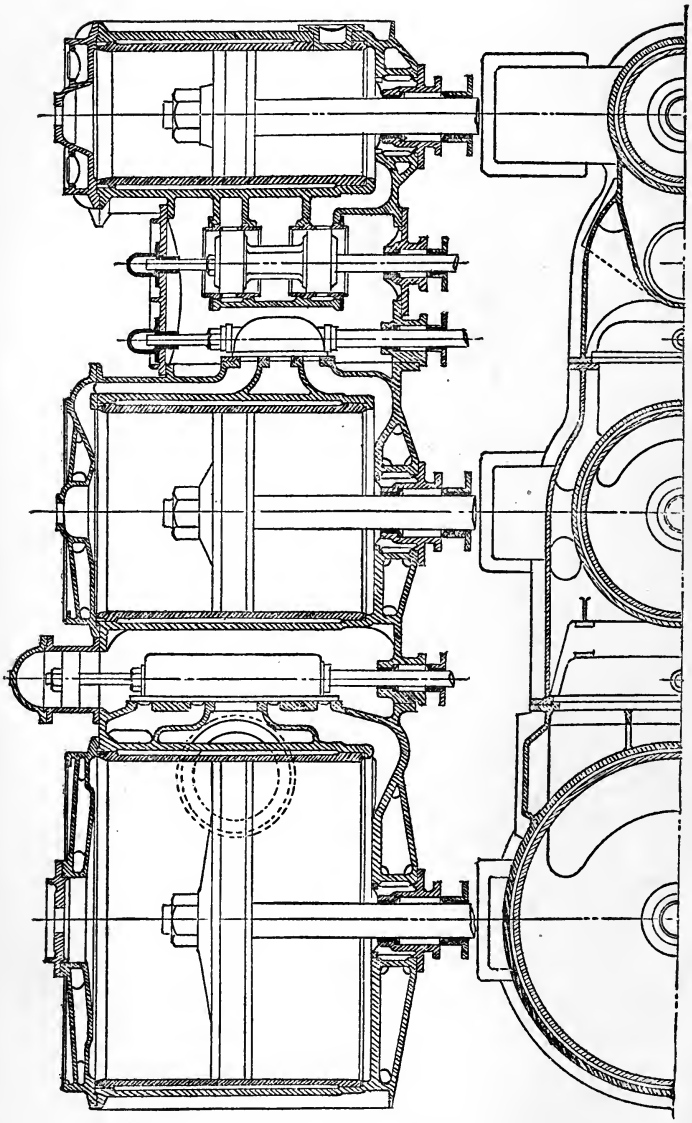

Fig. 19.—Cylinders of a Triple Expansion Engine.

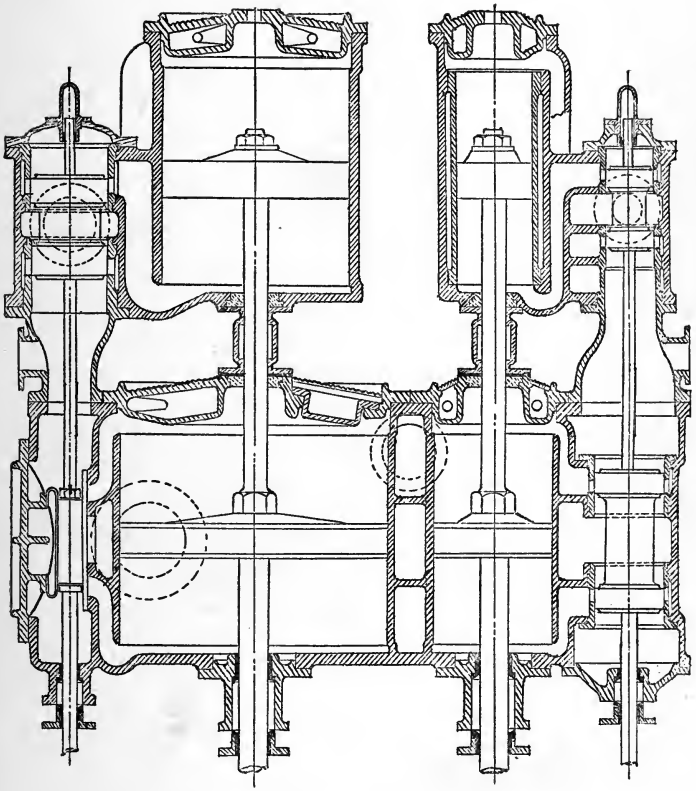

Fig. 20.—Cylinders of a Two-Crank Quadruple Engine.

the cylinders can be made of such proportions as to admit of this; but in the case of the engines made by Messrs. Rennie, owing to the two piston-rods for the return connecting-rod, there was not that choice of ratios of cylinders, and hence the peculiar positions of the cranks, which were so set as to produce the least ratio of maximum to mean effort. It was usual to place the high-pressure between the two low-pressure cylinders of compound engines, and it was found that this suits the design better than any other.

When steam of pressures above that used in locomotives was employed for marine engines, it was found advisable, in order to obtain good results, to place a cylinder above what would be otherwise the high-pressure one of a two-cylinder compound engine, and admit steam into it first. But experience has proved this style of triple expansion to have serious defects, and to be so far inferior to the three-crank engine as to be superseded by it for all powers at a trifling increase in cost. This system of three cylinders was advocated by some engineers for all steam pressures of 100 lbs. and upwards, in order that a due amount of expansion might take place in the system without necessitating an abnormally early cut-off in the high-pressure cylinder, and without resorting to the room and expense of the ordinary three-cylinder arrangement. The initial strains by this system are certainly less than would be the case if only two cylinders are employed, and the admission valve, or that regulating the steam to the first cylinder, can be one more easily handled and worked.

Four-Cylinder or Tandem Engines.*—This was a particular form of compound engine, in which there were two low-pressure cylinders on columns, as in the case of a two-cylinder expansive engine, and over each a smaller cylinder, which was the high-pressure cylinder for the one below it, thus forming a double compound engine. The arrangement hence becomes the same as if two single crank compound engines were placed in line, and the crank-shafts coupled. By this plan each piston is only half the area of the corresponding one of a two-cylinder arrangement, and consequently the cylinders are only half the volume, giving a large reduction in weight for the individual parts of the cylinders, covers, &c.; but the pistons and connecting-rods will be practically of the same diameter as those of a two-cylinder engine of the same power, and the diameter of the crank-shaft will be the same; so that the only gain over the two-cylinder arrangement was the reduction in size of the castings, and that each crank had a complete engine operating on it, instead of a part of a compound engine. The cost of manufacture is more, the weight is certainly not less, and the friction of the pistons, stuffing-boxes, valves, &c., is very much more.

As compared with a three-cylinder compound engine it had certain advantages. The high-pressure cylinder piston and rods are as heavy in the latter as in a two-cylinder engine: the low-pressure cylinders, &c., are the same size in a three-cylinder engine as that in the

* See p. 96.—On Triple Expansion Engines.

four-cylinder one; and the crank-shaft of a three-cylinder engine, although of somewhat smaller diameter, is half as long again as that of the four-cylinder engine, and, consequently, the foundation is longer; there are more bearings, more columns, and more valve-gearing. In other words, the three-cylinder engine, so far as space fore and aft, and number of fittings below the cylinders, are concerned, exceeds the four-cylinder engine by one half. On the other hand, if one cylinder of the three-cylinder arrangement is disabled, the whole system is rendered useless, until some means can be adopted of repairing it, or turning the steam to and from the other cylinders, as in an expansive engine, while each crank of a four-cylinder engine is worked by an independent engine, which can work when the other is disabled by simply disconnecting it, or even by shutting steam off from the disabled engine only in some cases.

The high-pressure cylinder was sometimes supported on a dome-shaped stool, formed with the low-pressure cylinder cover; and sometimes it was carried on columns which were clear of the low-pressure cover, and independent of it. The latter plan, although not so neat in appearance, admits of the cover of the low-pressure cylinder being raised for the examination of the piston; and by making the cover in halves, bolted together, it may be removed without disturbing the high-pressure cylinder or rod. When the high-pressure cylinder was supported on a stool, it was a very common practice to cast this with only one-half of the low-pressure cylinder cover, leaving the other half free for removal to examine the low-pressure piston. In small engines this latter plan does very well, but for large engines, the cylinders are apt to rock, unless supported by another column; this auxiliary column may, however, be made portable, and the two high-pressure cylinders rendered still more stable, by bracing them to one another with tie-rods.

At one time it was a very common practice to compound old expansive engines by placing two small cylinders above the original ones; but although this is a cheaper plan than to provide two new compound cylinders, it was not found to be so economical in working with small engines, owing to the friction of so many glands and pistons. In the plan introduced by Mr. Allibone, the high-pressure cylinders were bolted direct to the low-pressure covers, and the high-pressure piston-rod passed through a stuffing-box in the covers on top of the cylinder, and secured in a crosshead, at the outer ends of which were secured the top ends of the two rods belonging to each low-pressure piston. By this plan, however, the number of stuffing-boxes is increased from three for each engine to five, and a greater total height for the engine is required, besides which it is almost impossible to examine the low-pressure cylinder without removing the high-pressure cylinder.

There are several other methods which have been carried out from time to time, in which the four cylinders are differently arranged from the foregoing, but none of them have met with sufficient success to induce a repetition of the attempt.

The four-cylinder compound engine was one of the first compound arrangements introduced in the Navy; and, although for some years previous to this the paddle-wheel engines of this type made by the late Mr. John Elder had given very great satisfaction, when this system was applied by Messrs. Humphrys and Tennant to two troop-ships and an ironclad, the results were not so good, and no doubt prevented the general adoption of the compound system for naval purposes for many years.

The four-cylinder and two-cranks are sometimes made on the triple compound system, one of the upper cylinders being a high-pressure and the other a medium-pressure; or, in the case of altering old compound engines, both the upper ones are high-pressure. But the quadruple compound engine is invariably of this design, the arrangement of cylinders being obvious.

Four-Cylinders with Three-Cranks may be seen where the ordinary three-cylinder compound engine has been "tripled" by adding a high-pressure cylinder over each original low-pressure one, and is obviously a convenient design for engines of large power on the triple system.

Six-Cylinder Engine.*—There have been only two examples of such an engine. The first was that fitted by Messrs. Randolph & Elder in 1864 into H.M.S. "Constance," and which really consisted of two three-cylinder engines, set slightly inclined and opposite one another, so that each crank was operated on by two pistons. This engine was not a success, for the enormous friction of so many pistons, valves, stuffing-boxes, &c., was not compensated for by the saving intended to be effected in the crank journals. The other example is to be found in S.S. "City of Rome;" it consists of three single-crank compound engines coupled, and was no doubt adopted for the same reasons given before, when speaking of the four-cylinder engines. These engines are spoken of as "six-cylinder tandem engines."

* See p. 96.—On Triple Expansion Engines.

CHAPTER V.

ENGINES, SIMPLE AND COMPOUND.

Elementary Steam-Engine.—The steam-engine, in its most elementary form, has only one cylinder, into which the steam is admitted at each end alternately, so as to move the piston backwards and forwards, and having performed its work is then allowed to escape into the atmosphere. Although from certain causes this was not the form of steam-engines as first invented, it is nevertheless the most simple one, and by taking it as the origin, the genesis of the steam-engine can be better explained. As all successful engines for marine purposes are so far those having cylinders and pistons, it will be unnecessary in this chapter to deal with any other forms.

Origin of the Compound Engine.—The exhaust steam issuing from an engine having a late cut-off and an initial pressure of, say, two atmospheres (or 15 lbs. above atmospheric pressure), would attract the attention of an observant engineer from the force with which it emerges from the exhaust-pipe, and would naturally lead him to inquire how so great a waste of energy *might* be avoided. It would be clear to him that there was sufficient energy remaining in it to do useful duty after it had accomplished its work in the cylinder. If he were acquainted with the steam-engine of Watt, he would probably suggest that, instead of allowing it to escape into the atmosphere, it might be conducted to the cylinder of a condensing engine, which could work with a steam pressure of one atmosphere, and while propelling the piston of this second engine, would not cause any more back pressure in the first cylinder than before. Such an arrangement would be a combination of a high-pressure and a condensing engine, and hence we find it called a *compound engine.*

This combination has been carried out in some instances in modern times; and no doubt it was from his observation of Trevithick's high-pressure non-condensing engine, together with his knowledge of Watt's condensing engine, that Woolf was induced to invent the "compound" engine.

Expansive Engine.—If the observer, however, happened to be better acquainted with the expansive force of steam than with the use of a condenser, he would suggest that the steam should be cut off at such an earlier part of the stroke as would ensure its

pressure, at emission, being only slightly above that of the atmosphere. Such an engine would naturally be called *expansive*, in contradistinction to the original engine, working without expansion. Any further attempt at increased expansion would prove fruitless, as the steam, expanded below the pressure of the atmosphere, will fail to escape into it when opened to exhaust; besides which, the "back" pressure on the other side of the piston would, during the latter part of the stroke, be greater than the forward. Only by connecting the exhaust pipe to the condenser, in which the pressure would be 10 or 12 lbs. below that of the atmosphere, could a higher rate of expansion be obtained.

All the very early marine engines were *expansive*, and, according to circumstances, either condensing or non-condensing, but generally the former. This condition was to a very large extent imposed on makers of engines, because in those days the boilers could not be economically made for pressures much above that of the atmosphere, even for small steamers, and for large ones it was an impossibility. With a better knowledge of boiler-making, and a supply of larger and thicker plates, engineers began to attempt to work their engines with steam of a higher pressure, and obtained thereby satisfactory results. A few accidents, however—generally caused by the ignorance and carelessness of the attendants—tended to check any very great advance in this direction, and it was not until public confidence was regained that engineers could continue the movement to any great extent.

Effects of Increase of Pressure.—If an engine is to work economically, so far as steam is concerned, it has been stated that the terminal pressure, before admission to the condenser, should be as low as possible consistent with good working.

It is generally easy to obtain a vacuum of 26 inches in a modern condenser, and 24 inches was usual with even a poor form of jet condenser. But as many engineers prefer to work their engines with only 24 to 25 inches of vacuum (for the sake of obtaining warm feed-water), let it be assumed that 24 inches is the vacuum in the condenser. In a well-designed engine, the vacuum in the cylinder, after exhaust, should be at least within 2 inches of this, which means that the back pressure is 4 lbs., corresponding to 22 inches of vacuum. When the full benefit of expansion is required, the terminal pressure should not exceed 7 lbs., which will be 3 lbs. above the back pressure.

In order to appreciate fully what is encountered in making advances in boiler pressures, it will be well to compare two engines working under the conditions as set out above.

Suppose these two engines to have each one cylinder of the same diameter and stroke, the boiler pressure of the first to be 2 atmospheres, or 30 lbs. absolute, that of the second 3 atmospheres, or 45 lbs. absolute, the terminal pressure in both cases to be 7 lbs., and the back pressure 4 lbs.—The cut-off in the first will be $\frac{7}{30}$ of the stroke, or a rate of expansion of 4·285, and the mean pressure with

an initial of 30 lbs. is 17·4 lbs.; deducting 4 lbs. of back pressure, the *effective* mean pressure will be 13·4 lbs. In the second engine, the cut-off will be $\frac{7}{45}$ of the stroke, and the rate of expansion 6·43, and the mean pressure with an initial of 45 lbs. is 20 lbs.; deducting, as before, 4 lbs. for back pressure, the *effective* mean pressure is 16 lbs. The *effective initial* pressures will be 30 – 4, or 26 lbs., and 45 – 4, or 41 lbs., respectively.

Since the cylinders are of the same capacity, and the terminal pressures are the same, each engine consumes the same *weight* of steam; but since the total heat of evaporation of steam from the temperature corresponding to 4 lbs., and at that corresponding to 45 lbs., is 1130° Fah., while at that corresponding to 30 lbs. it is 1121° Fah., there will be an expenditure of fuel to obtain the steam at 45 lbs. slightly in excess of that at 30 lbs. As this, however, amounts to less than 1 per cent., it may be neglected, and the cost of the steam assumed to be the same. It will be seen then that, with the advance of boiler pressure, there is an advance in mean pressure, and the gain in power amounts to nearly 20 per cent.; but the initial strain on the piston of this more economic engine is 57 per cent. higher than that on the more wasteful one, and consequently the rods, framing, &c., must be 57 per cent. stronger; the shaft will also be increased in size, and the cylinder and passages must be stronger. Altogether, then, the engine will become heavier and more costly, as the boiler pressure is increased.

To render the comparison strictly fair, it would be necessary to take two engines of *equal power*, so that if the stroke of the pistons is the same, their areas will be inversely proportional to the mean pressures, and, consequently, the initial strains will now be 26 lbs. and $\frac{13·4}{16}$ of 41, or 34·5 lbs., which gives an excess of 31·3 per cent.

Progress Made by Early Marine Engineers.—The early engineers, however, did not advance on these lines as a rule, for very nearly the same rate of expansion was observed with steam of three atmospheres as had obtained with steam of atmospheric pressure, and consequently very little benefit was derived in economy, compared with what might have been the case had they done so. The chief result accruing from the increased boiler pressure was the larger indicated horse-power developed by engines of the same size as formerly, partly due to the augmentation of mean pressures, and partly to the increased piston speed resulting from these.

Engines of as much as 200 N.H.P., working with steam of 60 lbs. pressure, were supplied to the Navy by Messrs. John Penn & Son as early as 1853; but a period of more than fifteen years elapsed before the Admiralty again employed such pressures in any larger ship than a gunboat.

Just previous to the reintroduction of this high boiler pressure into the Navy, warships were being supplied with boilers loaded to 30 lbs. per square inch; the rate of expansion was about 1·5

when at full speed, and about 3 when cruising. Some merchant ships were still working under similar conditions; but the majority of new vessels, unless fitted with compound engines, were supplied with boilers loaded to 40 or 50 lbs. per square inch, and the rate of expansion was about 3 to 4 when on regular service. The advocates of the expansive system (in order to rival the performance of the compound engine) used a boiler pressure of 60 lbs., and a rate of expansion of 5. Some small steamers, and some larger ones in which economy was sacrificed to speed, had engines supplied with steam of 5 atmospheres and a rate of expansion of only 1·5.

A comparison of four such engines, having the same stroke and developing the same power, can be made from the following results:—

TABLE III.

Load on Safety Valves, .	lbs.	30	45	60	60
Diameter of Cylinder, .	ins.	50	50·8	51·1	38
Initial Absolute Pressure, .	lbs.	45	60	75	75
Cut-off, ...	stroke	$\frac{6}{10}$	$\frac{3}{10}$	$\frac{2}{10}$	$\frac{6}{10}$
Back Pressure, . . .	lbs.	4	4	4	4
Mean Effective Pressure, .	,,	36·77	35·66	35·15	63·95
Terminal ,, .	,,	27·00	18·00	15·00	45·00
Maximum Load on Piston,	,,	80,483	113,456	145,550	80,514
Mean ,, ,,	,,	72,180	72,180	72,180	72,180
Ratio of Max. to Mean, .		1·115	1·572	2·016	1·115
Weight of Steam used, .	,,	893	609	515	868

Examples 1, 2, and 3 show conclusively that by increasing the boiler pressure and rate of expansion, so as to obtain nearly the same mean pressure, the weight of steam used is considerably diminished and the terminal pressure considerably reduced, but that there is an increase in the maximum load on the piston proportionate to the *absolute* pressure in the boiler, so that the ratio of maximum to mean pressure of example (3.) exceeds that of example (1.) by more than 80 per cent.

Although such an increase in weight of machinery as would be necessitated by so great an increase in strain, may not be of much importance in some ships, in others it would be prohibitive; for when the power required for certain speeds of ship becomes large compared with the displacement, it requires the utmost care in design to keep down the weight, so as to admit of the engines being

carried by the ship on the required draught of water. For this reason, in actual practice, it was found impossible to use steam of over 50 lbs. pressure (above the atmosphere) in very fast river steamers, or even in high-powered steamers for Channel service of moderate size, on account of the limited speed of piston obtainable with the paddle-wheel. By means of forced draught and constructing the engines as much as possible of steel, with a special design of light compound engines, pressures of 100 to 125 lbs. are now employed in such ships. With the screw engine, where the number of revolutions per minute may be largely varied without any very widely differing results, and which may have a long stroke of piston without encroaching too much on passenger or cargo space, the evils arising from high initial pressures may be so mitigated as to permit of their being used for the fast navigation of shallow waters by comparatively small steamers; but it seldom happens that such ships have sufficient draught of water to admit of sufficiently large screws for efficient working.

Example (4.) is given that the effect of two widely different boiler pressures may be compared, when the rate of expansion is the same. The mean pressure is, of course, much higher, and, but for the back pressure being the same, would bear the same proportion to that at the boiler pressure of 30 lbs. as the initial absolute pressures, viz., 5 to 3. The weight of steam used is very little less than that of 30 lbs. pressure, and, owing to the reduction in the size of the piston, the maximum load in this case is practically the same as in example (1.). The pressure at exhaust is exceedingly high, being 45 lbs. absolute, or 30 lbs. above that of the atmosphere, so that it is capable of doing considerably more work, if admitted into another cylinder of larger size, than that of the first; and even if admitted into one of the same size (provided it finally exhausts into a condenser), more work will be obtained from the steam than if it is allowed simply to escape into the atmosphere. No advantage, however, will be gained by using a second cylinder of the same size over that of exhausting the steam direct into a condenser; in fact, in practice, from the resistance by friction, &c., a second cylinder would give a positive loss.

Receiver Compound Engine.—Now, suppose that an engine working under the conditions set out in example (4.) (so far as pressure and cut-off are concerned) exhausts into a steam-tight space, so that there is back pressure in front of the piston equal to the pressure in this receiver of the exhaust steam; and suppose, further, that the steam is taken away from the receiver at the same rate as it is supplied by the cylinder, there will then be a constant pressure maintained there. For the sake of fixing the application to example (4.), suppose, again, the pressure in its receiver to be 30 lbs. *absolute*, then the mean pressure in the cylinder will be $67{\cdot}95 - 30 = 37{\cdot}95$ lbs. only. Now, suppose a second and larger cylinder to be supplied with steam from the receiver at such a rate that there is no change of

pressure in it (this being accomplished by so arranging the cut-off in the second cylinder, that the weight of steam taken by it equals the weight of steam exhausted from the first one); the cut-off may be determined from the formula $pv = \text{const.}$; so that if V be the volume of the second cylinder and v that of the first, 45 lbs. the terminal pressure in the small and 30 lbs. the initial in the large cylinder. Then, cut-off in the second cylinder $= \frac{45\,v}{30\,V} = \frac{3}{2} \times \frac{v}{V}$, and if the ratio of V to v is 3, the cut-off in the second cylinder is $\frac{1}{2}$ stroke, and the rate of expansion in it 2.

The mean pressure, with an initial pressure of 30 lbs. and a rate of expansion 2, is 25·38 lbs.; and allowing for a back pressure of 4 lbs., the mean effective pressure in the second cylinder is 21·38 lbs.

Since the area of the second piston is three times that of the first, the work done in the second cylinder is equivalent to what might be done by one of the same area as the first, with a mean effective pressure three times as great, or 64·14 lbs. per square inch. It will be seen from this that the total work done by the combined cylinders is the same as would be done by the original cylinder with a pressure of 37·95 + 64·14, or 102·09 lbs. per square inch; hence we find that there is a gain of nearly 60 per cent. from the introduction of the second cylinder. So far, the compound engine would be undoubtedly more economical than the expansive engine, as exemplified in examples (1.), (2.), and (4.), but less in this particular instance than example (3.).

Expansive and Compound Engines Compared. — To examine the relative economy of a compound and of a simple expansive engine, it is necessary that they should both work with the same boiler pressure and the same rate of expansion. Now examples (3.) and (4.) satisfied the first condition, and if the second is also satisfied, then they may be compared. The rate of expansion in example (4.) is 1·666, and since the volume of steam in the second cylinder at the end of its stroke will be three times that in the first at the same period, the total expansion effected by both cylinders will be 3 × 1·666, or five times. The cut-off in example (3.) was two-tenths the stroke, and therefore its rate of expansion is five; so that these two examples may be compared as to the efficiency of the steam. The effective pressure of the compound system may be referred to the large cylinder, in the same way in which it was referred to the small one, and will be that actually on the large cylinder, together with that on the small one *divided* by the ratio of their capacities; hence, effective mean pressure referred to the large cylinder is $21{\cdot}38 + \frac{37{\cdot}95}{3}$, or 34·03 lbs. per square inch. It will be seen that this is 1·12 lbs. less than that obtained in the simple expansive engine, and therefore a loss has occurred in the compound system.

Suppose, now, that the cut-off in the large cylinder is so altered that the pressure in the receiver is 45 lbs., so that it receives steam at the same pressure as that which exhausts from the small one; in this case there will be no "drop" in the pressure from commencement of exhaust to the end in the small cylinder.

The mean effective pressure in the small cylinder is now 67·95 – 45, or 22·95 lbs. per square inch.

The cut-off in the large cylinder $= \frac{45\,v}{45\,V}$, or $\frac{1}{3}$ the stroke, which gives 3 as the rate of expansion.

With an initial pressure of 45 lbs. and rate of expansion 3, the mean pressure is 31·5 lbs.; allowing 4 lbs. for back pressure, the effective mean pressure is 27·5 lbs.

Referred to the large cylinder the effective mean pressure of the system is now $27{\cdot}5 + \frac{22{\cdot}95}{3}$, or 35·15 lbs. on the square inch, or *exactly the same* as that obtained in the simple expansive engine.

Effect of "Drop" in the Receiver.—It is seen from the above, then, when no "drop" occurs there is no loss of efficiency; but that when the pressure in the receiver is less than the terminal pressure in the small cylinder, there is a loss of effective mean pressure. This arises from the steam being allowed to *expand* from the small cylinder into the receiver *without doing work.* But it is known that, when this takes place, the steam becomes superheated; for, inasmuch as the loss of pressure has occurred without conversion into external work or loss of heat in any way, it must appear in some other form. Although this loss is not wholly recovered, it is considerably reduced by the benefit which the steam derives from the superheating in expanding in the large cylinder, and it is therefore more apparent than real.

Division of the Work.—It will be also seen that, as the ratio of the cylinders' capacity is 3, and the effective mean pressures 22·95 lbs. and 27·5 lbs., the work done in the small cylinder to that in the large is as 22·95 to 27·5 × 3, or nearly 1 to 3·6; while in the former case it was as 37·95 to 21·38 × 3, or nearly 1 to 1·7.

Therefore, with an *earlier* cut-off in the large cylinder, *more work* is developed in it than is the case with a later cut-off; and, moreover, with this ratio of cylinders, in order to get the highest efficiency of the steam, the ratio of the work done is as 1 to 3·6; and the initial pressure on the large piston is 41, and on the small $\frac{75-45}{3}$, or 10, as against 71 on the expansion engine of *equal* size; and even if the compound engine were arranged with one cylinder above the other, the combined initial pressure would be 41 + 10, or 51, as against 71 of the simple expansive.

Direct Expansion Compound Engine. — The compound engine

may, however, work without an intermediate receiver, if the pistons are arranged to move simultaneously, either in the same or opposite directions. To consider this case—suppose the cylinders to be side by side, and the pistons to move in opposite directions, so that when the small piston has *receded* one-tenth of the stroke, the large one has advanced by exactly the same amount, and the space between them is $0{\cdot}9\,v + 0{\cdot}1\,\mathrm{V}$; the volume of steam at commencement of exhaust is v, and the pressure at that period, as before, 45 lbs.; the volume at any point of the stroke $\left(\frac{n}{10}\right)$, or the space between the pistons $= \frac{n}{10}\mathrm{V} + \frac{10 - n}{10}v$,

$$= \frac{n}{10}(\mathrm{V} - v) + v,$$

and since $\mathrm{V} = 3\,v$, space between the piston at n-tenths of the stroke $= v\left(\frac{n}{5} + 1\right)$.

The pressure at this point $= 45 \div \left(\frac{n}{5} + 1\right)$. The pressures at every tenth of the stroke from 0 to 10 will be 45, 37·5, 32·14, 28·12, 25·0, 22·5, 20·45, 18·75, 17·3, 16·07, 15·0; the mean of which is 24·78 lbs. per square inch. Deduct this from 67·95, and the effective mean pressure in the small cylinder is 43·17; deduct 4 lbs. from 24·78 lbs., and the effective mean pressure in the large cylinder is 20·78 lbs.

The effective mean pressure of this system, referred to the large cylinder, is now $20{\cdot}78 + \frac{43{\cdot}17}{3}$, or 35·17 lbs. per square inch, which is the same as that obtained by direct expansion in one cylinder—example (3.)

It will be observed, however, that the ratio of the power exerted by the small cylinder to that exerted by the large one, is as 43·17 to $3 \times 20{\cdot}78$, or 1 to 1·44, being nearer an equal distribution of the work than in either of the cases of the intermediate receiver engine. This latter result is caused principally by the decreased back pressure in the small cylinder.

In actual practice there are certain causes which materially modify the results shown by both of these forms of compound engine, as illustrated in the foregoing.

In the receiver compound engine, the pressure in the receiver is not constant, because of its limited size, the difference in the periods of exhaust and admission, and the cushioning after cut-off in the large cylinder by the small piston.

The direct expansion engine is only nominally without a receiver, as the space between the small piston and the large one is often considerable, from the size of the communication pipes and the

valve-box of the large cylinder. The valve of the large cylinder cuts off some time before the small one ceases to exhaust, causing cushioning in the latter and in the spaces; the small cylinder also commences to exhaust before the large one can take steam.

Direct expansion compound cylinders have, however, been arranged so that one cylinder communicates directly with the other, without any intervening space, by placing the cylinders side by side, and causing the pistons to operate on cranks set opposite one another. But such engines have, for other reasons, proved generally very unsatisfactory.

Requisites in the Marine Engine.—A marine engine must be (1.) readily started and reversed; (2.) it must have a twisting strain as nearly uniform as possible; (3.) it must be able to work continuously for long periods without stoppage from any cause; and (4.) and lastly, it must be economical.

The first condition is a *sine quâ non*, and is generally fulfilled by having two cylinders, operating on cranks at right angles.

The second condition is absolutely necessary when weight is a serious consideration, and is very fairly satisfied by the two cranks at right angles, and the cylinders so designed as to divide the work equally between them. When weight and size of working parts are of small importance, a single-crank engine, or an engine with two cranks opposite one another, each having a fly-wheel to ensure uniformity of motion, will answer.

The third condition will depend very much on the *variation* in strain, so that the engine with small initial-pressure compared with mean-pressure, is more likely to fulfil it than one with large initial pressures.

The fourth condition, which is of the utmost importance to the shipowner, is very well complied with by the receiver form of compound engine, and better still by the triple and quadruple compound engines.

It has been shown that a compound engine in which the steam expands direct from the one cylinder to the other, and the receiver engine having a cut-off in the large cylinder the same as the ratio of the small to the large cylinder, are both equal to the direct expansion simple engine in efficiency of the steam. But neither of these two forms answers conditions (1.) and (2.), and it is doubtful if they do condition (3.), while experience has shown that they do not always satisfy condition (4.) Although numerous attempts have been made by very many able men to design and construct an engine on the compound system which shall have the highest efficiency, so far as steam used is concerned, the fact remains, that the form which is theoretically least efficient was the one that survived, and was recognised on all sides as the best compromise of the various conditions governing the choice of a marine engine.

With two cylinders and cranks at right angles, there must

inevitably be some amount of "drop," if the work is to be evenly divided when the power is so much as is usually developed by a marine engine at service speed. The crank of the small cylinder should lead—that is, should be in advance of the other crank by 90°, or such other angle as it is deemed best to set the cranks at. When this is the case, the small cylinder begins to exhaust just after the crank of the large cylinder has got well over the centre, and tends to maintain a constant pressure on the large piston through the earlier portion of its stroke, and at cut-off the pressure in the receiver is not much below its average pressure. If, on the other hand, the crank of the large cylinder leads, exhaust takes place only a little before cut-off in the large cylinder, and causes a hump in the indicator-diagram, showing an increase in the amount of "drop," and that with no diminishing in the mean back pressure in the small cylinder. Engines having the low-pressure engine crank as the leading one are also generally unhandy.

The small cylinder of a compound engine is called the "high" pressure, and the large the "low," from their association with the condensing and non-condensing engine. For convenience in speaking of them, they are designated by the initials H.P. and L.P. Hitherto, in the chapter, all comparisons of the compound with the simple expansive engine have been made on the supposition that the expansive engine has only one cylinder of the same capacity as the low-pressure one of the compound system. To render the comparison perfectly fair, it will be necessary to take such cases as may be found in actual practice.

Comparative Efficiency of the Various Kinds of Marine Engine.—(1.) *A single-cylinder expansive engine:* rate of expansion, 5; initial pressure, 80 lbs. absolute; area of piston, A.

Mean pressure = 41·76 lbs.
Effective mean pressure = 41·76 − 4 = 37·76 lbs.
Effective initial load on piston = (80 − 4) A = 76 A lbs.
Efficiency of the system . = 1·00.

(2.) *A single-crank compound engine:* rate of expansion, 5; initial pressure, 80 lbs. absolute; area, L.P. piston, A; ratio of cylinders, R, generally in practice, 4.

Effective mean pressure referred to L.P. piston = 41·76 − 4 = 37·76 lbs.

Terminal pressure in H.P., and initial pressure in L.P. $= \frac{R}{5} \times 80$
$= 64$ lbs.

Effective initial load on H.P. piston $= (80 - 64)\frac{A}{4} = 4$ A

" " L.P. " = (64 − 4) A = 60 A.

Efficiency of the system . . = 1·00.

Total load on crank is therefore 64 A, against 76 A with the simple expansive engine.

As in actual practice there is invariably a drop, which will amount to as much as 10 lbs. in an engine of this kind, the initial pressure in the low-pressure cylinders being decreased by that amount, and that of the high-pressure increased. So that, actually, the total loads will be as 56·5 to 76, or a saving in the compound engine of over 25 per cent. of the strain put on the rods, framing, &c.; and also enabling a large reduction to be made in the diameter of the shafting. The engine will work much more steadily, owing to the ratio of maximum to mean pressure being so largely reduced; and the handiness very much increased from the cut-off in the high-pressure cylinder being so late as $\frac{8}{10}$ the stroke. The friction of the two cylinders, &c., is considerably greater than that of the one, but this is more than balanced by the reduction in friction on the guides and journals; and the friction on the valve of the single cylinder exposed to high-pressure steam, will be more than the combined friction of the two valves, the small one of which only is so exposed, while the expansion valve (which is necessary to the single cylinder for so early a cut-off) will also increase its loss from friction.

The compound engine compares more favourably with the simple expansive when both have two cylinders and two cranks. Then each engine has the same number of working parts of necessity, and the simple expansive, besides having the usual slide valves, each of which is exposed to the boiler pressure, has an expansion valve to each cylinder, in order to effect so early a cut-off. The following examples will show the results of the two systems under the same circumstances:—

(3.) *A simple expansive engine having two cylinders*, each of whose pistons has an area of $\frac{A}{2}$ inches; rate of expansion, 5; initial pressure, 80 lbs.

Mean pressure . . . $= 41{\cdot}76$ lbs.

Effective mean pressure . . $= 41{\cdot}76 - 4 = 37{\cdot}76$ lbs.

Effective initial load on piston $= (80 - 4)\frac{A}{2} = 38\ A$ lbs.

Effective mean load on both pistons $= 37{\cdot}76 \times A$ lbs.
Efficiency of the system . . $= 1{\cdot}00$.

(4.) *A compound engine having two cylinders*, the ratio of whose piston areas is 3, and the area of L.P. piston, A; rate of expansion, 5; initial pressure, 80 lbs; pressure in receiver, 21 lbs.

The cut-off in H.P. cylinder to effect this rate of expansion $= \frac{3}{5}$ or 0·6 the stroke.

The cut-off in L.P. cylinder to maintain 21 lbs. pressure in the receiver $= \frac{80 \times 0{\cdot}6}{21 \times 3} = 0{\cdot}76$ the stroke.

Effective mean pressure in H.P. cylinder $= 72{\cdot}48 - 21 = 51{\cdot}48$ lbs.

„ „ L.P. „ $= 20{\cdot}32 - 4 = 16{\cdot}32$ lbs.

Effective initial load on H.P. piston . $= (80 - 21)\frac{A}{3} = 17{\cdot}3 \times A$ lbs.

„ „ L.P. „ $= (21 - 4)\,A = 17{\cdot}0 \times A$ lbs.

Effective mean load on both pistons . $= 51{\cdot}48 \times \frac{A}{3} + 16{\cdot}32 \times A$

$= 33{\cdot}48 \times A$ lbs.

Efficiency of the system . . . $= 0{\cdot}887$.

It will be seen that the initial load on each of the pistons of the compound engine is very nearly equal in this case, and is less than half that on each piston of the expansive engine. The work done is very nearly equally divided between the two cylinders, but falls short of that done by the expansive engine by more than 11 per cent.

The compound engine, therefore, is nominally not so economic in steam, but is subject to much lighter strains, and to less variation in strain, so that its working parts may be much lighter, and it will run much more steadily than the expansive engine; and owing to such high strains, the friction on the journals and guides will be much more severe with the latter.

There is, however, one other advantage, and that a most important one in actual practice, which the compound engine has over its rival, and that is the comparatively small variation of temperature in the cylinders. The cylinder of the expansive engine is exposed alternately to the heat of the boiler-steam and the chill of the condenser, so that in a very short space of time, in the cases just now considered, the temperature ranges from 312° to 153° Fah., or over 159°.

The high-pressure cylinder of the compound engine dealt with is, however, exposed to a variation of 81° Fah. only, and the low-pressure cylinder to 78° Fah. only, or each to only half that of the expansive engine.

The loss of efficiency of the steam from condensation and partial re-evaporation on expansion, would be very great in an expansive engine, if it were not steam-jacketed carefully; and with the steam-jacket any re-evaporation which occurs during exhaust is at the expense of the heat from the jackets, which means a loss.

The compound engine, on the other hand, is not *of necessity* fitted with steam-jacketed cylinders, although there is economy to be effected by doing so. There is, moreover, very great danger of cracking the cylinders with such large variations of temperature; as cast iron will not stand sudden cooling when hot, nor much difference between the temperature of one part and the other.

These defects in the expansive engine are magnified and become very serious in slow-moving engines.

Relative Consumption of Fuel in the Simple and Compound Engines.—It is claimed, again, for the compound system, that economy in consumption of fuel is effected by it. That a great saving may be accomplished by adding a large condensing cylinder to an engine working under the conditions named in example (4.), page 87, is undoubted, and needs no further proof; and also that the compound engine using steam of a higher pressure than an expansive engine, and expanding more times, is worked with superior economy, has been shown; but that an expansive engine using the same pressure of steam, and expanding at the same number of times as a compound engine, should be less economical, needs solid proof, inasmuch as theoretically it is seen to be more economical. Carefully-devised experiments with actual engines were made by the British Admiralty, and by the Government of the United States, which show that, although there was no very great difference between the coal consumed per I.H.P. in the two systems, the compound engine, on the whole, is more economical. The best known of these experiments was the trial between the gunboats "Swinger" and "Goshawk," the latter having compound engines, with cylinders 28 inches and 48 inches diameter and 18 inches stroke, the former expansive engines, having two cylinders, 34 inches diameter and 22 inches stroke.

The result of these trials is given in the following:—

	"Swinger."		"Goshawk."	
Diameter of cylinder and stroke ins.	Exp., 2 cyls., 34×22.		Comp., 28 and 48×18.	
Boiler Pressure, . . lbs.	60	49·3	61·6	49·0
Vacuum, . . . ins.	26·1	26·25	25·5	28·4
Revolutions per minute, .	115	63·53	126	73·3
Mean pressures, . . lbs.	15·6	...	H.P. 30·7 L.P. 7·65	...
Indicated horse-power, .	363·9	80·4	374	77·8
Pitch of screw, . .	10′ 2½″	10′ 2½″	9′ 2½″	9′ 2½″
Speed of ship, . . knots.	10·21	6·00	10·299	6·00
Coal consumed per I.H.P. per hour, . . . lbs.	2·61	2·07	2·603	2·14
Water, ,, ,, ,,	21·32	21·47	15·57	18·69

These two ships (which were of the same dimensions, form, and power) were tried under similar circumstances, in the full power trial being steamed nearly side by side. Therefore, so far as was

possible, the competition was a very fair one, and fully tested the two systems. That the compound engine came out so nearly equal in economic results with the expansive engine is matter for surprise, especially when the above figures are carefully analysed, and really proves the superiority of the compound system, so far as economy of fuel is concerned. The expansive engine had the advantages of a longer stroke and a coarser pitched propeller, which enabled it to obtain both speed and power with fewer revolutions than its rival; and consequently, since the frictional and other losses will be nearly *the same per revolution* in each engine, its loss would be less and its efficiency higher. The compound engine was worked with an unequal distribution of the power, for the ratio of the cylinders being about 3, the work done in the H.P. is to that done in the L.P. cylinder as 30·7 to 22·95; this would contribute very much to the losses in it from the excessive "drop", there must have been, and from the high initial load on the H.P. piston. Although the coal consumed per I.H.P. per hour is practically the same at the full power trial, and somewhat in favour of the expansive engine at the lower power, it was shown, in a paper read before the Institution of Naval Architects by Mr. Sennett, that the consumption of water was much less in the compound engine than in the expansive; and inasmuch as that test eliminates all errors which may have arisen from differences in the boiler, fuel, and stoking, it is a better one. Mr. Sennett also showed that the compound engine could do better still; he gave the results of some further trials made by the Admiralty with gunboats similar to the "Swinger" and "Goshawk," of which the following is a summary:—

	"Sheldrake."		"Moorhen."		"Mallard."	
Diameter of cylinders and stroke ins.	Exp., 2 cyls. × 21″.		Exp., 2 cyls. × 21″.		Comp. 31″–48″×18″.	
Boiler Pressure, . . lbs.	62·35	53·0	63·5	41	58·4	59·0
Vacuum, . . . ins.	20	24	23·3	24·4	23·75	25·1
Revolutions per minute,	115·5	84·7	121·3	92·9	124·8	98·8
Speed of piston, feet per minute,	404	295	424	324	374	296
Indicated horse-power, .	367	137	387	180	398	213
Speed of ship, . . knots.	9·251	7·232	9·634	7·899	9·894	8·413
Water consumed per I.H.P. per hour, . . .	21·5	25·4	20·1	24·6	17·12	17·66

Independently, however, of scientific experiments or abstract reasoning, all sea-going ships of the mercantile marine were then

fitted with engines on the compound system; and those few firms who adopted the expansive engine with steam pressures of 60 lbs., abandoned it altogether, and compounded the engines so constructed. The Admiralty, also, soon adopted the compound engine for ships of every size, notwithstanding the argument which was used, with some show of reason, that the expansive engine was capable of working at full power with steam at atmospheric pressure, which the compound engine could not do, and which it might, for the sake of safety in action, be found advisable, and sometimes necessary, to do. It was considered a very serious thing that ships of the Navy should have engines which could not satisfy this requirement. All scruples on the point, however, were got over by using a three- or four-cylinder compound engine, so arranged that the *whole* of the cylinders could, if so desired, take steam from the boilers direct, and exhaust direct to the condensers.

The compound engine has, since the trials made by the Admiralty, been much improved in efficiency, and as more knowledge has been gained by experience, all the difficulties with which the early designers were surrounded have been overcome, and it is now accepted on all sides, without the least doubt, both as an economical and trustworthy engine. Similar controversies arose on the introduction of the triple compound, but have not lasted so long, owing, no doubt, to the better knowledge of the subject in these later days.

Like so many other matters in marine engineering, the questions of the best proportions and arrangements of cylinders are still open, and matters of opinion, and the most successful practice is that in which the best compromise between conflicting conditions has been effected.

Ratio of Cylinder Capacity.—The chief point at issue between rival engineering establishments, as well as between engineers generally, is as to what is the best ratio of cylinder capacity. In designing a horizontal return connecting-rod engine, it has been seen that there is not much choice in the matter, as the power required determines the size of the low-pressure cylinder, and the distance between the piston-rods that of the high-pressure; but when not trammelled by such conditions the ratio may be within certain bounds, according to the fancy or judgment of the designer. The low-pressure cylinder is undoubtedly the measure of the power of a compound engine, for so long as the initial steam pressure and rate of expansion are the same, it signifies very little, so far as *total power only* is concerned, whether the ratio between the low- and high-pressure cylinders is 3 or 4; but as the power developed should be nearly equally divided between the two cylinders, in order to get a good and steady-working engine, there is a necessity for exercising a considerable amount of discretion in fixing on the ratio.

Whatever be the ratio between the cylinders, it is a comparatively easy matter to set the valves, so that the power shall be equally divided, but in doing this very different results are ob-

tained of another kind, for the initial loads on the pistons will be materially affected. For this reason, in choosing a particular ratio of cylinders, the objects are—to divide the power evenly, and to avoid as much as possible "drop" and high initial strains.

If the power is equally divided, the mean pressure in high-pressure cylinder will be to that in low-pressure cylinder as R, the ratio of their capacities. Neglecting the loss from "drop," the mean pressure in the low-pressure cylinder is always the same, whatever R may be, because for a fixed power the low-pressure cylinder is constant, and half that power is to be developed by it. This being so, as R decreases the mean pressure in high-pressure cylinder decreases, and that absolutely, and not relatively only. But R decreases only by making the high-pressure cylinder larger; and any increase in that direction means increase in initial loads. If the mean pressure is decreased in the high-pressure cylinder with the same initial pressure, the terminal pressure will be less; and since this is so the cut-off in the low-pressure cylinder must be earlier to maintain equal division of the power, which will cause the pressure in the receiver to be raised, producing an increase in the initial load on the low-pressure piston. The increasing of the pressure in the receiver and decreasing of the terminal pressure lessens the "drop," and for this reason some manufacturers make their engines with cylinder ratio of 3 for a boiler pressure of 80 lbs.; while others, to avoid such high initial strains, prefer a ratio of 4.

The "drop" may be reduced to nothing, when the latter is the ratio by "notching up" the links of both cylinders, until the rate of expansion is nearly double that when working full power; the power is then also equally divided, if such is the case at full gear.

If increased economy is to be obtained by increased boiler pressures, the rate of expansion should vary with the initial pressure, so that the final pressure, or that at which the steam enters the condenser, should remain constant. If this rule is adhered to, it follows that, with the ratio of cylinders constant, the cut-off in the high-pressure cylinder will vary inversely as the initial pressure, and will be found as follows:—

Let R be the ratio of the cylinders; r, the rate of expansion; p_1 the initial pressure.

$$\text{Cut-off in high-pressure cylinder} = \frac{R}{r}.$$

r varies with p_1, so that the terminal pressure p_n is constant, and consequently $r = \frac{p_1}{p_n}$.

Therefore, $\text{Cut-off in high-pressure cylinder} = R \times \frac{p_n}{p_1}$.

If the cut-off is to remain at about half stroke, it follows that, as

$\frac{p_2}{p_1}$ decreases, so R must increase. If no change is made in R, then the cut-off becomes earlier with the increase in boiler pressure, and increased boiler pressure will mean increased strains and increased weights of rods, framing, and shafting.

If, on the other hand, the high-pressure cylinder is decreased as the pressure is increased, so that the initial pressures and mean pressures remain the same on the pistons, there will be the same economy of fuel effected without any increase in weight of the machinery.

Further Comparison of Efficiency of Engines.—The compound engine, having two low-pressure cylinders and one high, possesses advantages beyond those of the two-cylinder arrangement. It was, no doubt, first chosen principally in order to avoid excessive diameter of low-pressure cylinder for very large power, and because of the uniformity of the twisting moment on the shaft with three cranks at angles of 120° apart. But in this engine the work can be equally divided between the cylinders without those disadvantages previously shown to exist in the two-cylinder engine working under this condition. To divide the work equally, only one-third will be allotted to the high-pressure cylinder, and one-third to each of the two low-pressure cylinders, and this is done by maintaining a considerably higher pressure in the receiver than obtains in the two-cylinder arrangement. The "drop," therefore, is considerably less; and since each low-pressure piston has only half the area of that of the two-cylinder engine, the initial loads are not abnormally large. The increase in receiver pressure reduces the initial load on the high-pressure piston, and hence its diameter may be increased, so as to get increased expansion in it without increasing the initial load beyond that on the high-pressure piston of a two-cylinder engine of equal power.

(5.) *An engine having two low-pressure and one high-pressure cylinders working on three cranks.*—To fully appreciate these advantages, suppose such a three-cylinder engine to be working under the same circumstances as that of example (4.), page 87, so that the area of each low-pressure piston is $\frac{A}{2}$, and of the high-pressure piston $\frac{A}{3}$, the rate of expansion 5, and the initial pressure 80 lbs., absolute.

As in the previous example the cut-off is 0·6 the stroke. Suppose the pressure in the receiver to be 32 lbs. absolute,

$$\text{Then the cut-off in L.P. cylinders} = \frac{80 \times 0{\cdot}6}{32 \times 3} = 0{\cdot}56 \text{ the stroke.}$$

$$\left.\begin{array}{l}\text{The effective mean pressure in the} \\ \text{H.P. cylinder . . .}\end{array}\right\} = 72{\cdot}48 - 32 = 40{\cdot}48 \text{ lbs.}$$

The effective mean pressure in each L.P. cylinder . . . $= 28{\cdot}19 - 4 = 24{\cdot}19$ lbs.

Effective initial load on the H.P. piston $= (80 - 32)\,\frac{A}{3} = 16 \times A$ lbs.

" " each L.P. " $= (32 - 4)\,\frac{A}{2} = 14 \times A$ lbs.

The effective mean load on all three pistons . . . . . $= 40{\cdot}48 \times \frac{A}{3} + 2 \times 24{\cdot}19 \times \frac{A}{2}$
$= 37{\cdot}68 \times A$ lbs.

Efficiency of the system . . $= 0{\cdot}998$.

It is seen by this that the initial load on the high-pressure piston is $7\frac{1}{2}$ per cent., and that on each low-pressure piston $17\frac{1}{2}$ per cent., less than the corresponding loads of the two-cylinder engine of the same size; that the gain of efficiency of the steam is $12\frac{1}{2}$ per cent., if no allowance is made for superheating of the steam on expanding into the receiver; the "drop" in this case is $54 - 32$, or 22 lbs., as against 33 lbs. in the two-cylinder engine. It is seen, then, that theoretically this engine is nearly equal in steam efficiency, both to the simple expansive, and to the compound direct-expansion engine. On the other hand, the friction of three engines must be set against this, besides the extra cost of manufacture and the space occupied by machinery.

Triple Expansion Compound Engine.*—The compound engine having one high-pressure, one low-pressure, and one medium-pressure cylinder has now come into very general use; and if steam of over 100 lbs. pressure is to be used economically, and if the engine is to be efficient and good-working, some such arrangement is necessary. To ensure success, the steam must be expanded down to about 10 lbs. absolute, the initial loads on the pistons moderate, and the drop not excessive. The low-pressure cylinder will be *nearly* the same size as that of the ordinary *two*-cylinder arrangement (the reduction in size depending on the increased efficiency of the steam from the large rate of expansion).

(6.) For example:—To determine the particulars of a three-cylinder compound engine on this system to be equal to that set out in example (5.), page 88, the initial pressure being 127 lbs., and the rate of expansion 10.

The mean pressure in a single cylinder, with a cut-off at $\frac{1}{10}$ the stroke, is 41·91 lbs.; deducting from this 4 lbs. for back pressure, the mean *effective* pressure is 37·91 lbs., or nearly the same as that of example (5.), page 93. Suppose the cut-off in the high-pressure cylinder is 0·6 the stroke, then the ratio of the high-pressure to low-pressure cylinder must be 6 to effect a rate of an expansion of 10. The ratio of the middle (mean pressure) cylinder to high-pressure cylinder may be taken as $\frac{5}{2}$, and, consequently, the ratio of low-pressure to mean-pressure cylinder is $\frac{12}{5}$.

* See p. 96.—On Triple Expansion Engines.

The pressure between the high-pressure and mean pressure cylinders is to be 50 lbs., the cut-off in the mean-pressure cylinder will therefore be 0·61 the stroke. The pressure between the low-pressure and mean-pressure cylinders is to be 21 lbs.; the cut-off in low-pressure cylinder must therefore be 0·6 the stroke.

The effective mean pressure in H.P. cylinder $= 115 - 50 = 65$ lbs.
" " M.P. " $= 45{\cdot}4 - 21 = 24{\cdot}4$ lbs.
" " L.P. " $= 19 - 4 = 15{\cdot}0$ lbs.

The effective initial load on H.P. piston $= (127 - 50)\frac{A}{6} = 12{\cdot}83$ A lbs.

" " M.P. " $= (50 - 21)\,A\,\frac{5}{12} = 12{\cdot}1$ A lbs.
" " L.P. " $= (21 - 4)\,A = 17{\cdot}0$ A lbs.

The effective mean load on all three pistons $= 65 \times \frac{A}{6} + 24{\cdot}4 \times \frac{5}{12} A + 15\,A = 36 \times A$ lbs.
Efficiency of the system $= 0{\cdot}949$.

It will be seen that in this case, owing to "drop," there is a loss of nearly 2 lbs., but the work is fairly divided between the three cylinders, and the initial loads are by no means high; the drop from the high-pressure cylinder is only 26 lbs., and that from the mean-pressure cylinder $9\frac{1}{2}$ lbs. This engine then effects an expansion of 10, and is therefore a very economic one; it will have a very regular motion, and share in all the benefits of a three-cylinder engine; and the strains on the working parts will be very moderate.

(7.) To see how far this is true, it is only necessary to compare the results with those from *a three-cylinder engine, having two low-pressure cylinders*, each having a piston area of $\frac{A}{2}$.

Suppose the high-pressure cylinder to have a piston-area of $\frac{A}{4}$, the cut-off in the high-pressure cylinder to effect an expansion of 10, must be 0·4 of the stroke; the receiver pressure will be 42 lbs., and the cut-off in low-pressure cylinder 0·3 of the stroke.

The effective mean pressure in the H.P. cylinder $= 97 - 42 = 55$ lbs.

The effective mean pressure in each L.P. cylinder $= 27{\cdot}7 - 4 = 23{\cdot}7$ lbs.

The effective initial load on the H.P. piston $= (127 - 42)\frac{A}{4} = 21{\cdot}25 \times A$ lbs.

The effective initial load on each L.P. piston $= (42 - 4)\frac{A}{2} = 19{\cdot}0 \times A$ lbs.

The effective mean load on all three pistons $= 55 \times \frac{A}{4} + 2\left(23{\cdot}7 \times \frac{A}{2}\right)$
$= 37{\cdot}45 \times A$ lbs.

The initial load on the high-pressure piston is here 65 per cent. larger than in the preceding case, and that on each low-pressure piston 56 per cent. larger than on the mean-pressure piston, and $11\frac{3}{4}$ per cent. above that on the low-pressure piston; but the efficiency of the steam is somewhat higher in the latter case, the drop from the high-pressure cylinder being only 8·8 lbs. The ratio of maximum pressure to mean in the high-pressure cylinder is 1·54, and in the low-pressure cylinder 1·6, which are about the same as those of the old expansive engine working with a boiler pressure of 45 lbs., and cutting-off at 0·3 of the stroke. It is not always advisable to set the cranks at angles of 120° in a three-cylinder compound engine; their precise position depends on the power developed in each cylinder, and the relative twisting efforts at any moment. This will be seen on reference to Chapter IX.; and as an example of this, Messrs. Rennie arranged the cranks of the engines of H.M.S. "Bacchante" so that the low-pressure cranks were exactly opposite one another, and the high-pressure crank midway between them.

Triple Expansion Engines.—The success of the Triple Expansion Engine is now so well assured, and all doubts as to its efficiency and good working are so effectually dispelled, that it is without doubt the engine of the day. It does not differ in any essential feature from the ordinary Compound engine, and its success is in no small measure due to the fact that most makers of the new type departed as little as possible from their previous practice in its general construction. The arguments for and against this new class of engine bear a striking resemblance to those used in the well-remembered warfare of Compound *versus* Expansive engines, and the objections most strongly insisted on by the opponents of this new system are just those used against the original Compound engine, and are rather the echo of old battle-cries than the sounds of new ones. A few years' experience has demonstrated that the Triple Expansion engine is more economical than the ordinary Compound engine; that the wear and tear is no more, but rather less, when three cranks are employed, than with the two of the ordinary Compound; and that boilers of the common marine design can be made to work satisfactorily at a pressure of 150 lbs. per square inch, and even higher, while, with ordinary care, their durability and good continued working are not likely to be less than those of similar boilers pressed to 60 lbs. per square inch under similar circumstances. Speaking generally, the consumption of fuel is 25 per cent. less with a Triple Expansion engine than with an ordinary Compound engine working under similar circumstances. That is, a Triple Expansion engine, supplied with steam at 140 lbs. pressure, uses 25 per cent. less weight of water per I.H P. than an ordinary Compound engine supplied with steam at, say, 90 lbs. pressure, both engines being equally well-designed, manufactured, and attended to. Also, that a Triple Expansion engine is more economical than an ordinary Compound engine when both

are supplied with steam at the same pressure, for all pressures of 95 lbs. and upwards, and especially so in the case of large engines. Hence, it may be taken that the superior economy of the Triple Expansion engine, as now constructed, is due to two causes, viz.:— (1) To the superior pressure of steam used and the higher rate of expansion thereby possible; and (2) to the system whereby large initial strains and large variations of temperature in the cylinders and large "drop" in the receivers are avoided.

Increased pressure of steam is obtained by a very slight increase of consumption of fuel, and the efficiency of steam rapidly increases with increased pressure; hence, steam of high pressure is more economical than that at inferior pressures. For example:—

(i.) The total heat of evaporation of 1 lb. from 100° and at 274° F. (corresponding to 45 lbs. pressure absolute) is 1,097 thermal units.

(ii.) From 100° and at 320° F. (corresponding to 90 lbs. absolute) is 1,110 thermal units.

(iii.) From 100° and at 353° F. (corresponding to 140 lbs. absolute) is 1,120 thermal units.

(iv.) From 100° and at 377° F. (corresponding to 190 lbs. absolute) is 1,127 thermal units.

Suppose in each case the steam to be expanded to a terminal pressure of 10 lbs. absolute, the rates of expansion will then be 4·5, 9, 14, and 19 respectively; and the mean pressures corresponding to these initial pressures and rates of expansion will be 25 lbs., 32 lbs., 36 lbs., and 39 lbs. respectively. If the volume of a pound of steam varied exactly in the inverse ratio of the pressure, these figures would represent the relative values of the efficiency of the steam at the various pressures. But taken exactly, the relative values are 25, 33·3, 38·5, and 42·6, thus showing that a pound of steam at 90 lbs. pressure is capable of doing 33 per cent. more work than a pound at 45 lbs.; a pound of steam at 140 lbs. pressure, 16 per cent. more than a pound at 90 lbs.; and a pound at 190 lbs. pressure, 10·6 per cent. more than a pound at 140 lbs. pressure, or 28 per cent. more than at 90 lbs. pressure. In other words, an engine using steam at 140 lbs. pressure should, apart from any practical considerations, consume 16 per cent. less fuel than one using steam at 90 lbs.; and, again, that an engine using steam at 190 lbs. should consume 28 per cent. less fuel than one using steam at 90 lbs., and 10·6 per cent. less fuel than one using steam at 140 lbs.

Looking to see how far practice agrees with these results, it is found that the ordinary Compound engine, using steam at 140 lbs., is little, if at all, more economical than one using steam at 90 lbs., while the Triple Expansion engine, with steam at 140 lbs. pressure, gives a greater economy than theory shows should be due to the increased pressure. It follows, then, that there is some other cause operating to produce the economic results shown in every-day practice with this new engine, for there is now no question

that the saving in fuel effected by a Triple Expansion engine, using steam and expanding 11 or 12 times, is about 25 per cent. of that used by an ordinary Compound engine of the same power, using steam at 90 lbs. and expanding 8 to 9 times. The other cause, or rather causes, are not far to seek, for it is to be noticed at once that since, by using steam in the two cylinders of a Compound engine, the large variation in temperature in the cylinder of the Expansive engine was avoided (and this, doubtless, was one of the chief causes of its superior economy over the latter), then, by using three cylinders for the higher pressures, a similar result would be obtained. Further, as the ordinary Compound engine is not subject to such severe initial and working strains as prevail in Expansive engines of the same power, and using steam of the same pressure, so, in the Triple Expansion engine, with three cranks, these strains are still further reduced. In other words, by extending those leading features of the Compound engine which conduced to its economy, the engineers of to-day have achieved, with the Triple Expansion, a victory similar to that obtained twenty years ago by their predecessors, but with somewhat less brilliant results; and it is not difficult to see that any further advances must meet with still less gain. Until science and skill have discovered new materials, or other applications of old ones, there will not be much practical advantage in using steam at higher pressures than now obtained, and 200 lbs. absolute pressure seems about the limit at which theoretical economy is swallowed up by practical losses.

It has been repeatedly maintained by the opponents of Triple Expansion engines that, if the ordinary Compound engine is designed with a long stroke, it is as economical. In order to see how far this is true by practice, it is sufficient to examine the diagrams of the engines of the s.s. "Northern," whose cylinders are 26 inches and 56 inches diameter and 60-inch stroke, using steam at 130 lbs. absolute, and indicating 1,235 H.P., which show a consumption of 15·4 lbs. of water per I.H.P. per hour; and those of s.s. "Draco," whose engines have cylinders 21 inches, 32 inches, and 56 inches diameter and 36-inch stroke, using steam at 125 lbs. absolute, and indicating 618 H.P., which show a consumption of 14·1 lbs. per I.H.P. per hour. Or, again, by comparing the performance of the "Draco" with that of the "Kovno," having engines whose cylinders are 25 inches and 50 inches diameter and 45-inch stroke, using steam at 105 lbs. pressure absolute, and indicating 809 H.P., which show a consumption of 16·6 lbs. of water per I.H.P. In these cases, the consumption of the "Kovno" is 17·73 per cent. in excess of that of the "Draco," and 7·58 per cent. in excess of that of the "Northern"; and the "Northern" consumes 9·4 per cent. more than the "Draco."

The "Finland" has engines made from the same patterns as used for the "Draco," but the high-pressure cylinder is 20 inches diameter, and supplied with steam at 165 lbs. pressure absolute, the indicated horse-power is 806, practically the same as that of

the "Kovno." The consumption of water is in this case 12·88 lbs. per I.H.P., which shows a saving of 9·5 per cent. compared with the "Draco," and 28 per cent. compared with the "Kovno."

Comparing two other engines of smaller size than the above, but indicating nearly the same power, the gain is still more marked. The "Dynamo" has Triple Expansion engines, whose cylinders are 17 inches, 27 inches, and 48 inches diameter and 27-inch stroke, supplied with steam at 165 lbs. absolute pressure, and indicated 638 H.P. The "Bolama" has ordinary Compound engines, whose cylinders are 24 inches and 45 inches diameter and 33-inch stroke, supplied with steam at 95 lbs. absolute pressure, and indicated 561 H.P. The consumption of water of the "Bolama" is 16·8 lbs. per I.H.P., against 13·0 lbs. per I.H.P. of the "Dynamo," or 29·2 per cent. in favour of the Triple Expansion engine.

Consumption of water has been taken in each case to avoid any question as to the quality of the fuel, the efficiency of the boiler, or the ability of the firemen; but, to show how far these calculated results agree with practical observation, it will be sufficient to state that the consumption of coal taken from the logs of the ships and the returns made to the owner was 326 tons in the "Draco," and 405 tons in the "Kovno," or a saving of 19·5 per cent. over the "Kovno," with 6·5 per cent. higher speed. These are sister ships, loaded to the same draught and steaming equal distances under as nearly as possible similar circumstances. When comparing the performance of the "Draco" with that of the "Cairo," a sister ship to the "Kovno" and "Draco," having similar engines and boilers to the "Kovno," and on the same voyage and loaded to the same draught, the consumption was 469 tons in the "Cairo," the speed being 3 knots per day less than the "Draco"; the consumption of the "Draco" was in this case 30·5 per cent. less on the whole voyage, and 20·3 per cent. per day.

It is, however, needless now to multiply cases, as it is a matter of common observation that the saving in fuel is from 20 to 30 per cent., and it may safely be taken that the Triple Expansion engine, using steam at 165 lbs. absolute pressure, uses 25 per cent. less fuel than an equally good ordinary Compound engine of equal power and working under similar circumstances, using steam at 100 lbs. absolute pressure. That the variation in temperature in each cylinder of a Triple Expansion engine must be less than in each cylinder of an ordinary Compound engine with the same boiler pressure, is manifest, inasmuch as there is the same difference between the initial and terminal temperatures, and in the one case this is divided into three, and only into two in the other. The same, however, holds good when the boiler pressure of the Triple is 165 lbs. absolute, and that of the ordinary Compound is only 100 lbs.; for in the former case the total variation is 240° F., which divided by 3 gives a variation in each cylinder of 80° F., and in the latter case it is 202° F., which divided by 2 gives a variation in each cylinder of 101° F., or 26 per cent. excess.

On examining the indicator diagrams of the "Northern," it is found that the variation of temperature in the high-pressure cylinder is 102°, and in the low-pressure 100°; while the diagrams of the "Draco" show a variation of 64° in the high-, 68° in the medium-, and 66° in the low-pressure cylinder. Those of the "Kovno" show a variation of 93° in the high-, and 100° in the low-pressure cylinder. Those of the "Finland" show 70° in the high-, 70° in the medium-, and 83° in the low-pressure cylinder.

The three-crank Triple Expansion engine is now accepted as the most suitable for marine practice, and, therefore, as it is now the engine most generally made for this purpose, it will be better to compare it, so far as practical considerations are concerned, with the ordinary Compound, and for that purpose it is assumed in each case that the Triple is supplied with steam of 150 lbs. pressure by the gauge, or 165 lbs. absolute, unless stated to the contrary. Suppose, now, two engines are to be taken for comparison—viz., a Triple Expansion and an ordinary Compound—to develop equal powers with the same stroke of piston and same diameter of low-pressure cylinder. The initial pressure in the one case to be 100 lbs. absolute, and in the other 165 lbs. absolute. Let the number 14 represent the area of the low-pressure piston in each case; the mean pressure referred to the low-pressure piston be 24, and the efficiency of the systems equal, so far as expanding the steam is concerned. The area of the high-pressure piston may then, without fear of controversy, be taken as 4 for the ordinary Compound, and 2 for the Triple, and the area of the medium-pressure piston of the Triple as 5. If the referred mean pressure is equally divided in each case between the cylinders, the following shows the relative work done, viz.:—

Ordinary Compound Engine.		Triple Expansion Engine.	
High-press. Cylinder,	4 × 42 or 168	High-press. Cylinder,	2 × 56 or 112
Low ,,	14 × 12 or 168	Medium ,,	5 × 22·4 or 112
		Low ,,	14 × 8 or 112

That is, the *average* strain on the rods, columns, guides, &c., is 50 per cent. more with the ordinary engine than with Triple Expansion.

To obtain a mean pressure of 24 lbs., with an initial pressure of 165 lbs. absolute, and a pressure in the condenser of 2 lbs., the rate of expansion is 14, with an efficiency of 0·6; and with an initial pressure of 100 lbs. the rate of expansion is 7.

On examining diagrams taken under these circumstances from actual engines, the following is to be observed:—

Initial pressure in the high-pressure cylinder of the Compound engine, 98 lbs.; back pressure, 23 lbs.; effective initial pressure, 75 lbs. per square inch; or load on the piston, 75 × 4, or 300. In the low pressure the initial pressure is 22 lbs.; back pressure, 4; giving an effective initial pressure of 18 lbs. per square inch; or load on the piston, 18 × 14, or 252.

The initial pressure on the high-pressure cylinder of the Triple Expansion engine is 160 lbs.; back pressure, 63 lbs.; effective initial pressure, 97 lbs.; or the load on the piston, 97 × 2, or 194. In the medium pressure the initial pressure is 70 lbs.; and the back pressure, 21 lbs.; effective initial pressure, 49 lbs.; or the load on the piston, 49 × 5, or 245. In the low pressure the initial pressure is 18 lbs.; and the back pressure 4 lbs.; giving an effective initial pressure of 14 lbs. per square inch; or a load on the piston of 14 × 14, or 196. Thus showing the strain in the case of the Triple Expansion engine to be much less, notwithstanding the higher pressure of steam employed.

This, too, is shown in actual practice by comparing the initial strains on the engine of the s.s. "Northern," whose cylinders are 26 inches and 56 inches diameter and 60-inch stroke, indicating 1,242 H.P., and supplied with steam at 130 lbs. pressure absolute, with those of the Triple Expansion engine of the s.s. "Ariel," whose cylinders are 23 inches, 35 inches, and 60 inches diameter and 57-inch stroke, indicating 1,527 H.P., and supplied with steam at 165 lbs. pressure absolute.

The "Northern's" high-pressure piston sustains an initial strain of 530 × 100, or 53,000 lbs.; the low-pressure, 2,463 × 24, or 59,112 lbs. The "Ariel's" high-pressure piston sustains 415 × 100, or 41,500 lbs.; the medium-pressure, 962 × 60, or 57,720 lbs.; and the low-pressure, 2,827 × 18, or 50,886 lbs.—notwithstanding that the engines are larger and develop nearly 25 per cent. more power with higher boiler pressure.

Comparing the strains on the pistons of the "Northern" with those of the "Draco," whose low-pressure cylinder is the same diameter, and the boiler pressure practically the same, it is seen that the initial load on the high-pressure piston is 346 × 72, or 24,912 lbs. (or less than half that on the "Northern's"); on the medium-pressure, 804 × 35, or 28,120 lbs.; and on the low-pressure, 2,463 × 10, or 24,630 lbs. (again less than half that on the "Northern's"). Since, however, the Draco's mean pressure referred to the low-pressure cylinder is only 19·1 lbs., against 28·9 lbs. of the "Northern," it will be fairer to compare with the "Finland," having also a low-pressure cylinder 56 inches diameter, and the mean pressure referred, 25·2 lbs. In this case the initial load on the high-pressure piston is 314 × 96, or 32,144 lbs.; on the medium pressure, 804 × 45, or 36,800 lbs.; and on the low pressure, 2,463 × 13, or 32,019 lbs.—all of which compare most favourably with the "Northern," notwithstanding that the "Finland" works with a boiler pressure of 165 lbs. absolute.

The more even distribution of pressure also very materially affects the resistance of the slide-valves, and so tends in every way to reduce the losses due to mechanical causes.

So far, experience has shown that the wear and tear of the Triple Expansion engine with three cranks is very considerably less than with the ordinary two-crank Compound engine of the same power

and stroke, and no doubt this is due to those causes already shown to exist with this class of engine.

The three-crank Triple Expansion engine has, however, shown another valuable quality, and one which may easily be surmised from the foregoing reasoning—viz., that a much higher indicated power may be developed with a low-pressure cylinder, equal in size to that of a common Compound engine, without any increase in the initial strains on the pistons. This may be shown by comparing the performance of the engines of the "Eldorado," whose cylinders are 26 inches, 40 inches, and 68 inches diameter and 39-inch stroke, supplied with steam at 165 lbs. absolute pressure, with that of the engines of the "Juno," whose cylinders are 35 inches and 69 inches diameter and 39-inch stroke, supplied with steam at 100 lbs. absolute pressure. When running at 72 revolutions, the "Eldorado's" engines develope 1,572 I.H.P., and the "Juno's" 1,249 I.H.P., or 26 per cent. more power from the Triple Expansion than from the ordinary Compound, and that with a low-pressure cylinder 3 per cent. smaller. The initial strains on the pistons of the "Eldorado" are 54,060 lbs., 66,568 lbs., and 61,727 lbs., as against 69,264 lbs. and 71,041 lbs. on those of the "Juno."

Similar results can be shown with other engines of various sizes; and to extend the question, it may be taken as approximately correct that a referred mean pressure may be used in a Triple Expansion engine 50 per cent. higher than with an ordinary Compound engine without any serious difference in the strains on the working parts and frame-work. It is for this reason possible to manufacture a Triple Expansion engine at the same price per I.H.P. as an ordinary Compound engine; and, also, since the efficiency of a three-crank engine is higher than that of a two-crank engine, the economy is higher than that due to the saving in fuel per I.H.P. alone. The propelling efficiency of the three-crank engine is especially noticeable when running at low speeds, and it is no doubt on this account the best for naval purposes where so much cruising is done at comparatively slow speeds. It is also capable of being worked at much fewer revolutions without stopping on the centres than a two-crank engine, which is highly advantageous in navigating intricate channels and during a fog, as steerage power is kept without much "way" on the ship. This engine is also, when well constructed and properly adjusted, almost noiseless, and causes little or no vibration, which is an advantage in every ship, but especially in yachts and passenger steamers.

Mean Pressure in a Triple Expansion engine is from 0·6 to 0·7 of that given by theoretical calculation; and, as may be supposed, depends very much on the port areas, valve openings, and such other conditions as affect ordinary engines. At the high rates of expansion usually adopted, when economy of fuel is of first importance, there is a very strong tendency to condensation in the cylinders, and this is especially noticeable when running at low speeds. It seems from present experience that the more quickly

the steam is caused to pass through the system of cylinders, the higher its efficiency. From calculations made from indicator diagrams, it is seen that the condensation, or rather partial condensation, from the high-pressure to the low-pressure cylinder amounts to 3·2 lbs. per I.H.P. in the "Rosario" at 62 revolutions, is 2·3 lbs. in the "Dynamo" at 90 revolutions, and only 0·6 lbs. in the "Mosquito" at 102 revolutions; again, in the "Finland" at 72 revolutions the loss is 2·3 lbs., whilst, when notched up and running at 67 revolutions, it is 4·29 lbs., and in the "Electro" at 89 revolutions, it is 2·63 lbs., but at 72·5 revolutions it is as much as 5·8 lbs. Whilst in the ordinary Compound engines of the "Bolama," it is only 1·5 lbs. at 82 revolutions, and 2·1 lbs. at 66·5 revolutions. Had the cylinders been steam-jacketed, the loss would no doubt have been very much less; and, therefore, all slow running Triple Expansion engines should have, at least, the medium-pressure cylinder steam-jacketed, while fast running engines can do very well without it.

If the steam ports are such that the flow at exhaust does not exceed 6,000 feet per minute for moderate sizes of cylinders, and 5,000 for small sizes, and the opening to steam such that the flow is not more than 50 per cent. in excess of these, and the engines are to be run at a fairly high speed, the actual mean pressure should be 0·66 of the theoretical, and when the port area is more than given by the above rules, and a high number of revolutions, it should be 0·7 of the theoretical. The ordinary mercantile marine engine, as generally designed, gives a co-efficient of 0·62 to 0·66, while some are as low as 0·6.

Example.—To find the mean pressures expected from a Triple Expansion engine having good ports, and to be worked at a fairly high number of revolutions; the boiler pressure is 160 lbs. absolute, and the pressure in the condenser 2 lbs., the total rate of expansion being 12.

Referring to Table IV., page 118, the coefficient for an expansion of 12 is 0·2904; hence,

Theoretical mean pressure is $174 \times 0{\cdot}2904 - 2$ or 48·5 lbs.

The actual mean pressure is $48{\cdot}5 \times 0{\cdot}66$ or 32 lbs.

Example.—To find the size of cylinders to indicate 1,200 horse-power under the above conditions with a piston speed of 600 feet per minute.

$$\text{Area of low-pressure piston} = \frac{1{,}200 \times 33{,}000}{32 \times 600} = 2{,}062 \text{ square inches.}$$

And the diameter is $51\frac{1}{4}$ inches.

The power is supposed to be equally divided ~~between~~ among the three cylinders, hence the mean pressure in the low pressure is 10·67 lbs.

If this rate of expansion is to be obtained with a cut-off at 0·6 of the stroke in the H.P. cylinder, then the area of high-pressure piston

$$= \frac{2062}{0{\cdot}6 \times 12} = 286 \text{ square inches, and the diameter } 19\tfrac{1}{8} \text{ inches.}$$

The ratio of the low- to high-pressure cylinder is here 7·2, and, therefore, the mean pressure in the high-pressure cylinder is 7·2 × 10·67, or 76·8 lbs.

The size of the medium is a subject on which most engineers seem to differ. The mean size is, of course, obtained by dividing the area of the low-pressure cylinder by the square root of the ratio between the low and high. So that in this case the area medium-pressure piston

$$= \frac{2062}{\sqrt{7{\cdot}2}} = 769 \text{ square inches, and diameter } 31\tfrac{1}{4} \text{ inches}$$

From practical considerations this is too large, as the ranges of temperature will be unequal, and the strains unequal also, with such proportions; so that in the case here taken, 30 inches would be quite large enough.

Rules for Sizes of Cylinders.—The area of the high-pressure piston

$$= \frac{\text{area of low-pressure piston}}{\text{cut-off in H.P. cylinder} \times \text{rate of expansion.}}$$

Area medium-pressure piston

$$= \frac{\text{area of low-pressure piston}}{1{\cdot}1 \times \sqrt{\text{ratio of L.P. to H.P. cylinder.}}}$$

If the engine is arranged with the high-pressure cylinder over the medium-, or over the low-pressure cylinder, the medium-pressure cylinder should be somewhat smaller, in order to equalise the power on the cranks. In this case the area of medium-pressure piston

$$= \frac{\text{area of low-pressure piston}}{1{\cdot}2 \times \sqrt{\text{ratio of L.P. to H.P. cylinder.}}}$$

However, as of old with the ordinary Compound engine, so with the new Triple Expansion engine, no two makers seem to agree as to the proportions of the cylinders, and the disagreement is almost limited to the size of the medium-pressure cylinder.

The space occupied by the Triple Expansion engine is one of the special and valid objections raised against it by its detractors, but when closely looked into it is not found to be by any means a vital hindrance. The objection cannot, of course, be raised at all against this engine when used with two cranks, but only when three are employed.

It requires little or no argument to make plain what is at first sight obvious—viz., that three cranks must take up more space in the direction of the axis of the shaft than do two; but seeing how often in a cargo-boat the engine-room is made unnecessarily large to obtain the 32 per cent. reduction in tonnage, the objection in

this case is without weight. Even when this is not the case, and the engine-room has to be prolonged to suit the engine, the arrangement also gives space for larger engine-room bunkers, and thus permits of reduction of the athwart bunker, if it does not allow of its total abolition. Moreover, since the reduction in consumption of fuel is from 20 to 30 per cent., to provide for the same number of days' steaming, the bunkers may be from 20 to 30 per cent. smaller; or, with the same amount of bunker space, the ship can steam from 20 to 30 per cent. longer, which is by no means the least of the advantages claimed for the Triple Expansion engine, and one most valuable in the case of ships making long voyages. This consideration will, doubtless, before very long materially affect the prosperity of many of the foreign coaling stations, to the material advantage of the shipowner and, to some extent, a blessing to the passenger.

Again, as a set-off to an enlargement of the engine, the saving in consumption of fuel permits of a corresponding reduction in the size of, and consequently the space occupied by, the boilers.

And finally, since it is possible that as much as 50 per cent. more power can be developed with the Triple Expansion engine than with the ordinary Compound having the same size of low-pressure cylinder; and, as very generally from 20 to 25 per cent. more power is developed for equal nominal horse-power, an engine about 20 per cent. smaller can be adopted. This is easily understood when it is known that, with a good Triple Expansion engine, a referred mean pressure of 30 lbs. can be obtained as against 25 lbs. under similar circumstances with an ordinary Compound engine, and 28 lbs. against 22 lbs. with the most ordinary description of engines.

To meet objectors, some engineers have gone so far with alteration of design as to run a very great risk of bringing the Triple Expansion engine into bad repute. Beyond doubt it is of much more importance to the shipowner to have an engine which works with little wear and tear, and without breakdown and damage, than to secure a few extra feet of hold space. It is, therefore, much to be deprecated that the crank-pins and journals of these engines should be so shortened as to require constant attention, their brasses being almost inaccessible. It is true that this type of engine permits of smaller crank-pins, owing to the comparatively small initial strains, while the journals for the same reason (and because of the superior balance of the power) may also be shorter, and it is equally true that it is folly to adhere blindly to rules which only apply to the two-crank engine when designing a three-crank engine; nevertheless, on the other hand, it must not be overlooked that by following rules based only on working considerations and proportioned to normal strains, an engine may be designed which is so crowded and confined as to render that attention to the working parts which is so necessary at all times almost an impossibility. In other words, an engine of this sort may be theoretically, or rather scientifically, perfect, but practically bad.

Experience has shown that a Triple Expansion engine may be designed with ample bearing surfaces, easy of access, and even with valves worked link motion, and still occupy but very little more space than an ordinary Compound engine, and that some of these engines, really taking up no more space than the old type, give most satisfactory results.

Arrangement of Cylinders.—The different ways in which the cylinders of a Triple Expansion engine may be arranged are very numerous. The first engine of the kind, designed by Mr. Kirk for the s.s. "Propontis," had cylinders 23 inches, 41 inches, and 62 inches diameter by 42-inch stroke, working on three cranks. These engines were made in 1874, but owing to the failure of the boilers were set down generally as unsuccessful. It was not till advances in the manufacture of steel and a better knowledge of boiler-making had enabled engineers to construct boilers of the ordinary cylindrical tubular type for much higher pressures than had hitherto generally obtained, that Messrs. Douglas & Grant could venture again, in 1878, to take up the Triple Expansion engines for the yacht "Isa." These engines have cylinders 10 inches, 16 inches, and 28 inches diameter by 24-inch stroke, supplied with steam at 120 lbs. pressure, from a cylindrical boiler 8 feet 9 inches diameter, and 8 feet 6 inches long; the cylinders were, in this case, arranged with the high-pressure above the medium-pressure operating on one crank, and the low-pressure operating on the other. In the year 1881 Mr. Kirk again designed a three-crank Triple Expansion engine for the s.s. "Aberdeen," having cylinders 30 inches, 45 inches, and 70 inches diameter by 54-inch stroke; the steam pressure was, however, only 115 lbs. per square inch. Since then very many of these engines have been made, some on one plan, some on another.

Taking the two-crank engine, two methods are of course very obvious, and are shown by diagrams, Nos. 1 and 2, on page 109. No. 1 is the arrangement of the s.s. "Isa," and likewise that of the "Draco" and "Finland" previously spoken of, and made by Earle's Shipbuilding and Engineering Co. It is a simple plan, and, of course, has the merit of taking up only the same space as the ordinary engine. The method is, however, open to the objection that it is almost impossible to divide equally the power between the two cranks, and when the power is only divided as 2 to 3 the initial strains are comparatively high. This, and the method shown in diagram No. 2, are now chiefly noticeable as a cheap and convenient way of recompounding old Compound engines, and adapting them to work with steam of higher pressures. The s.s. "Yeddo" was so treated by Earle's Shipbuilding and Engineering Co. (on plan No. 2), and the consumption of fuel was thereby reduced from 17 tons to 13·5 tons per day, the same boilers being used, but the pressure increased from 70 lbs. to 100 lbs. That the power may be evenly divided between two cranks, two high-pressure cylinders may be employed, one over the medium-, and one over

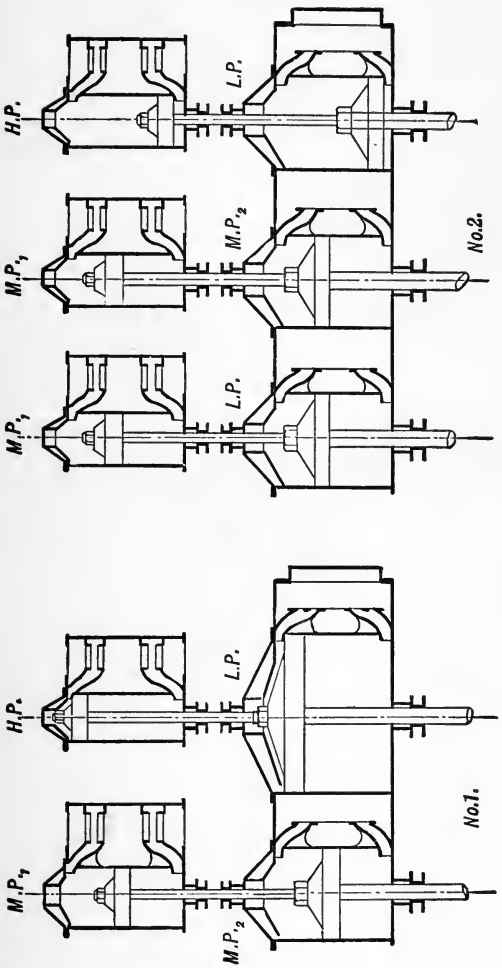

Fig. 21.—Quadruple Expansion Engines.

the low-pressure cylinder, as shown on diagram No. 3. This, too, is a convenient way of recompounding old engines, especially when of large power, where the disparity of strains would be serious if plans No. 1 or 2 were adopted.

If it is desired to have only two cranks, and the engines are of power so large as to require an abnormally large low-pressure cylinder, then plan No. 1, page 110, may be adopted with advantage, for by it there are two low-pressure cylinders, with the high-pressure cylinder over one, and the medium- over the other. These two latter plans, however, have the disadvantage of four cylinders as against three, with the corresponding number of valves and stuffing-boxes to absorb power.

Plan No. 4, page 109, shows the arrangement of cylinders in their natural sequence for a three-crank engine, and as arranged by Earle's Shipbuilding and Engineering Company in the "Rosario," "Martello," "Eldorado," &c., already mentioned. If the valve-boxes are placed at the front or back of the engines, the cylinders may be much closer together, and a very symmetrical arrangement is got by placing the low-pressure cylinder in the middle, while a little less space still is occupied by putting the high-pressure cylinder in the middle.

Plan No. 2, page 110, is an arrangement suitable for very large engines when it is necessary to have three low-pressure cylinders—in this case over each there is a cylinder, two of which are medium-pressures, and one a high-pressure, and for simplicity these three might be of one size. In this way the engines of the "City of Rome" might be made to act on the Triple Expansion principle by admitting steam to one only of the present high-pressure cylinders, and exhausting into the other two.

Plan No. 3, on page 110, shows another arrangement by which large engines, having three cranks and two low-pressure cylinders, may be recompounded, and still have the power equally divided between the cranks. This is done by placing a new high-pressure cylinder over each of the two low-pressure cylinders. Another obvious method is to place one new high-pressure cylinder over the original high-pressure, which becomes thus converted as before into a medium-pressure cylinder; in this case, however, the power would be unevenly divided.

Quadruple Expansion Engines.—These engines are a further development of the Compound principle, whereby steam is expanded through a sequence of four cylinders. The amount of power to be gained by using steam above 150 lbs. pressure is very small theoretically, and, if in practice, from the losses which inevitably occur from leakage, &c., there is every reason to anticipate no great practical gain. Again, if to use these higher pressures an additional cylinder is required, a considerable amount of the gain will be absorbed by increase of friction, &c. No doubt an engine, constructed on plan No. 1 (page 107), using steam of, say, 180 lbs., would compare favourably with one on plan No. 3 (page 109),

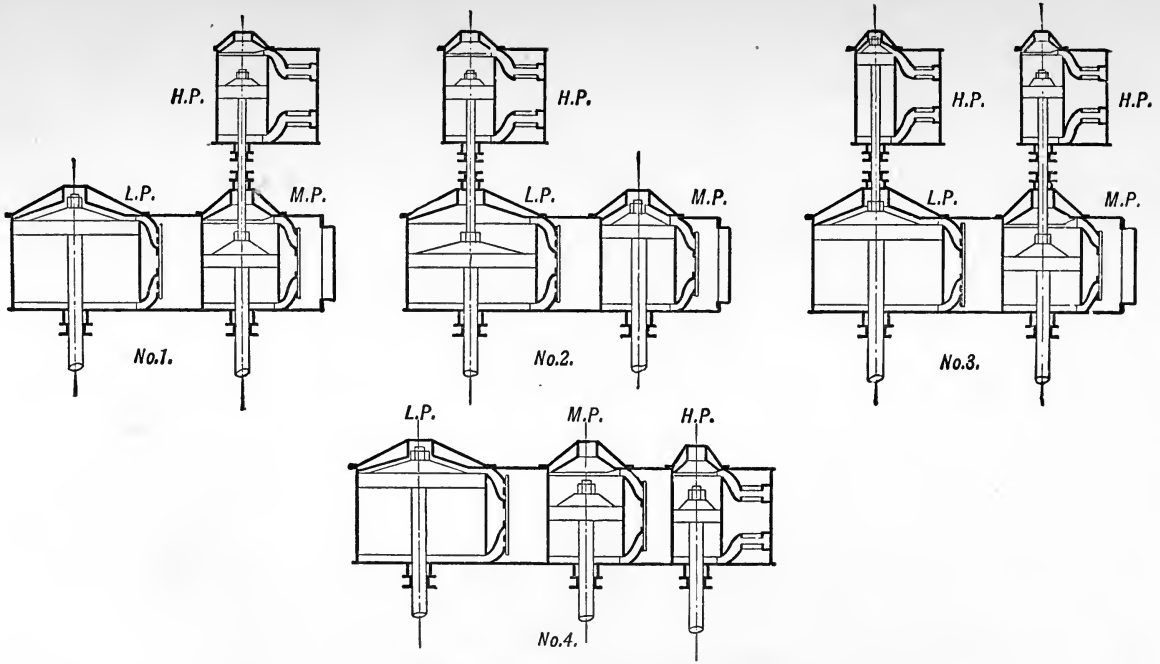

Fig. 22.—Triple Expansion Engines.

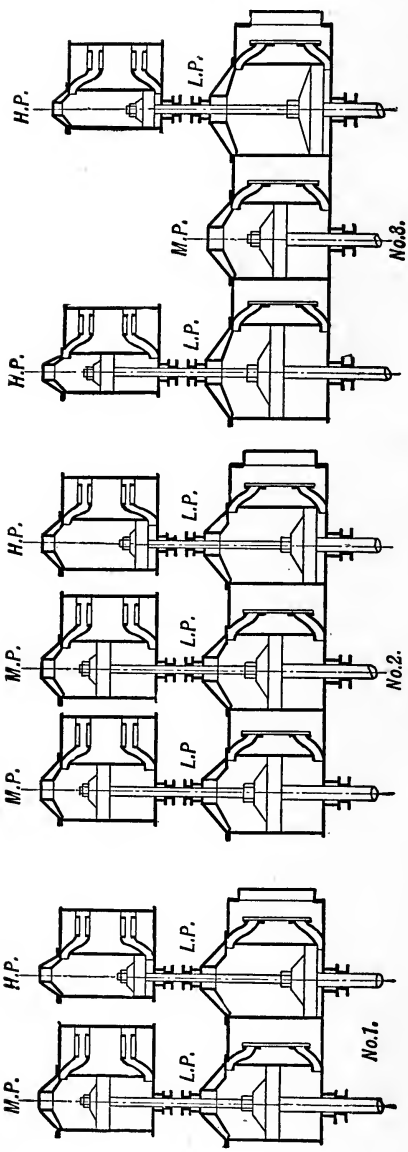

Fig. 23.—Triple Expansion Engines.

using steam of, say, 150 lbs., because in each case there are four cylinders on two cranks; but that it would be more economical than one on plan No. 4 (page 109), using steam at 150 lbs. is very problematical. Plan No. 2 (on page 107) may be taken as the same as plan No. 2 (on page 110), so far as size of cylinders is concerned, for there are three cylinders on the main columns of one size and having over each a cylinder of equal size. The steam enters the first of these smaller cylinders and exhausts into the next two; these, in their turn, exhaust into the middle one of the larger cylinders, which, again, exhausts into the other two larger ones, and so forms a Quadruple Expansion engine with only two sizes of cylinders.

The Quadruple Compound Engine.—This type of engine is the natural extension of the multiple expansion principle of the steam engine beyond the Triple Expansion, and only differs from the latter in having a fourth cylinder in which expansion takes place. The same causes that operated to produce the Triple Expansion engine have brought out the Quadruple. There is, however, the suspicion of an additional cause in this case from the fact that it was first adopted by those engineers who were slow to accept the Triple engine as a solution of the existing engineering difficulties; these having been late in the field compensated themselves by adopting the more advanced plan. They also have taken credit for the saving in space in the engine-room, by obtaining with two cranks a better balanced engine than was possible with three cylinders operating on two cranks; but seeing that a Triple engine may have four cylinders operating on two cranks, their comparisons were scarcely fair ones, as in this case the engine would be equally well balanced with the Quadruple. It cannot, however, be claimed, apart from space occupied, that the two-crank Quadruple is so good an engine from the mechanical point of view as the three-crank Triple; and although it is claimed that this form of Quadruple consumes less coal per I.H.P. per hour than a corresponding Triple engine with three cranks it is very doubtful if the consumption per voyage in similar ships is materially less. For the same power the low-pressure cylinder of each engine will be practically the same size, especially if economy of fuel is to enter into consideration. The fourth cylinder with its piston, valves, &c., will cause a distinct addition to the resistance of the engine and a consequent loss of useful work. The objections to increased boiler pressure hold good in this as in other cases, so that losses in practice are likely to arise from it. On the other hand, large increases in boiler pressure are not advisable with a Triple engine, and as with the water-tube boiler very great increase in boiler pressure is now possible without any serious risks, the Quadruple engine is likely to a large extent to take the place of the Triple engine, just as the Triple did of the Compound engine, especially in the better form of a three-crank or four-crank engine.

The two-crank Quadruple was an obvious arrangement of the type at the outset, and it is still obviously commendable for quadrupling the old ordinary Compound engines. It had, however, in addition to the objections above mentioned, that appertaining to the four-cylinder ordinary Compound, viz.:—want of accessibility to the pistons of the lower cylinders and extra cost of examining, overhauling, and repairing the engines. The next arrangement to suggest itself would be the addition of a cylinder to a three-crank Triple Expansion engine, placing it above the original high pressure. This, too, however, is tainted with the same fault. Hence to obtain the most satisfactory Quadruple it is better to face at once all the difficulties and employ four cranks, having a cylinder to each; with this arrangement the engine can be well balanced by placing the first and second cranks opposite to one another, the second and third cranks at right angles to one another, and the third and fourth cranks opposite to one another. When this is done one set of link motion is sufficient for the first two cylinders and another set for the second two cylinders.

When, however, the engines are so large as to require two low-pressure cylinders it is then better to have two high-pressure cylinders, not only as the engine is thereby better balanced but difficulties of construction, owing to the large size of the cylinders, and the high-pressure of the steam are avoided. When this plan is adopted the most symmetrical design is obtained by putting the two low-pressures side by side with the two high-pressures above them, the first medium pressure on the fore side of the low-pressure cylinders, and the second medium pressure on the after side. It is then easy to divide the work evenly between the four cranks.

The consumption of fuel with a good Quadruple Expansion engine with a boiler pressure of 200 lbs. per square inch should not exceed $1\frac{1}{4}$ lbs. of Welsh coal per I.H.P. per hour. Even better results than this are stated to have been obtained in practice, but seeing that the water consumption as measured by the indicator cards of these engines has been 12 lbs. per I.H.P. per hour, the coal consumption is likely to have been higher than above named. Table III*a*. gives the water consumption of various Triple and Quadruple engines, by which it will be seen that the saving of the latter over the former is about 7·7 per cent.

Ratio of Cylinders as found in actual practice.—(*a*.) For compound engines whose power does not demand a low-pressure cylinder of such dimensions as are inconvenient, or beyond the capabilities of manufacture, and when the rate of expansion is not such as to demand special arrangements, two cylinders are preferable. In actual practice it is not usual to make cylinders over 100 inches in diameter, and many engineers prefer to limit the size to 90 inches, although engines have been made with cylinders over 120 inches. The rate of expansion may be taken at one-tenth of the boiler pressure (or about one-twelfth the *absolute* pressure),

TABLE III*a*.—Results of Steam Trials with Various Marine Engines.

Name of Vessel.	Description of Engines.	Diam. of Cylinders.	Stroke.	Pres. at Eng.-Room.	Rate of Expansion.	Revolutions per Minute.	Indicated H.P.	Speed of Vessel.	Ind. Consumpt. Lbs. of Water per Stroke.	Ind. Consumpt. Lbs. per I.H.P. per Hour.
		Inches.	Inches.	Lbs.				Knots.		
S.S. Northern, . .	Ord. Comp. Engs.,	26 56	60	115	7·73	57·5	1242	9·25	2·57	15·4
,, Kovno, . . .	Do.,	25 50	45	90	6·6	73	809	10·6	1·473	16·6
,, Bolama, . . .	Do.,	24 45	33	80	6·2	82	562	11·23	·867	16 8
,, Draco, . . .	2-Crank Trip. Engs.,	21 32 56	36	110	11·97	73	618	10·5	·975	13·8
,, Finland, . .	Do.,	20 32 56	36	150	12·2	72	806	9·0	1·136	12·88
,, Rosario, . .	3-Crank Trip. Engs.,	20½ 33 58	36	150	15·1	62	664	9·0	1·007	11·3
,, Don, . . .	Do.,	40 63 96	54	145	8·73	72	4702	16·82	7·44	13·67
,, Ariosto, . .	Do.,	30 46 75	45	148	9·92	79	2601	14·6	4·05	14·7
,, Victoria, . .	Do.,	23½ 35 57	33	148	7·94	105	1522	14·9	1·747	14·4
,, Queen, . . .	Do.,	12¾ 20 32	22	150	8·88	132	324	11·07	·261	12·75
,, Pegu, . . .	Quad. Comp. Engs.,	25¾ 38½ 51½ 75	51	179	14·16	59·8	1856	...	2·775	10 73
,, Righi, . . .	Do.,	17 24 35 50	27	184	15·17	72	633	10·5	·881	12·0
,, European, . .	Do.,	14 21 29 44	27	175	16·03	82	442	11·2	·537	11·9
,, Polo, . . .	Do.,	12¾ 18½ 27 39	24	200	15·01	98	495	11·3	·467	11·1
H.M.S. Magpie, . .	3-Crank Trip. Engs.,	20 30 45	24	138	6·93	189·5	1358	14·25	·947	15·9
,, Philomel, S. .	*Do.,	30½ 45 68	33	153	5·84	160·5	3735	18·43	3·11	16·04
,, Philomel, P. .	Do.,	30½ 45 68	33	153		167·2	4085		3·29	16 2
,, Andromache S.,	*Do.,	33½ 49 74	39	152	5·74	136·9	4771	19·5	4·51	15·5
,, Andromache P.,	Do.,	33½ 49 74	39	152		139·3	4589		4·2	15·3
,, Endymion S., .	*Do.,	40 59 88	51	150	5·7	100	5147	20·96	5·86	13·7
,, Endymion P., .	Do.,	40 59 88	51	150		100	5338		6·28	14·1

* Twin-screws.

to work economically at full speed. Therefore, when the diameter of the low-pressure cylinder does not exceed 100 inches, and the boiler pressure 70 lbs., the ratio of the low-pressure to the high-pressure cylinder should be 3·5; for a boiler pressure of 80 lbs., 3·75; for 90 lbs., 4·0; for 100 lbs., 4·5. If these proportions are adhered to, there will be no need of an expansion-valve to either cylinder. If, however, to avoid "drop," the ratio be reduced, an expansion-valve should be fitted to the high-pressure cylinder.

Where economy of fuel is not of first importance, but rather a large power, the ratio of cylinder capacities may, with advantage, be decreased, so that with a boiler pressure of 100 lbs. it may be 3·75 to 4.

(*b.*) The two-cylinder compound engine having direct expansion in its most perfect form is arranged with the cylinders side-by-side, and each piston operating on an independent crank opposite the other. The ratio of the cylinders has been generally smaller in this case than that given above. When the cylinders are placed one above the other, as in the single-crank engine, there is no *necessity* to divide the work equally, although it is better to do so generally; the chief difficulty in the way of effecting this by means of the cut-off, arises from the fact that both valves are usually worked by the same eccentrics and gear, and the cut-off must be practically the same in both. Hence, if any variation in the division of the work is required, it must be done by means of a separate expansion-valve on the high-pressure cylinder, or by the ratio of the cylinders. From practical considerations the ratio is generally 4; but when the steam pressure exceeds 90 lbs. absolute, it is better to be 4·5; and for 100 lbs., 5·0.

(*c.*) When the power requires that the low-pressure cylinder shall be more than 100 inches diameter, the three-cylinder engine with two low-pressure cylinders, or the double "tandem" engine, having two low-pressure and two high-pressure cylinders, should be adopted. In the latter case, the same proportions as given for a single-crank engine will be observed. In the former case, the ratio of the combined capacity of the two low-pressure cylinders to that of the high-pressure may be 3·0 for steam pressure of 85 lbs. absolute, for 95 lbs. absolute 3·4, and for 105 lbs. absolute 3·7, and for 115 lbs. absolute 4·0.

(*d.*) When the pressure of steam employed exceeds 115 lbs. absolute it is advisable to employ three cylinders, through each of which the steam expands in turn. The ratio of the low-pressure to high-pressure cylinder in this system *should be* 5, when the steam pressure is 125 lbs. absolute; when 135 lbs. absolute, 5·4; when 145 lbs. absolute, 5·8; when 155 lbs. absolute, 6·2; when 165 lbs. absolute, 6·6; when 175 lbs. absolute, 7·0; when 185 lbs. absolute, 7·4; and when 195 lbs. absolute, 7·8. The ratio of low-pressure to mean-pressure cylinder should be rather less than one-half that between low-pressure and high-pressure, as given above. That is, if the ratio of L.P. to H.P. is 6, that of L.P. to

M.P. should be about 2·7, and consequently that of M.P. to H.P. about 2·25. In practice the ratio of M.P. to H.P. is nearly 2·25, so that the diameter of the M.P. cylinder is 1·5 that of the H.P. When the ratio of M.P. to H.P. is 7·5, that of the M.P. to H.P. should be about 2·5. The introduction of the triple compound engine has admitted of ships being propelled at higher rates of speed than formerly obtained without exceeding the consumption of fuel of similar ships fitted with ordinary compound engines; in such cases the higher power to obtain the speed has been developed by decreasing the rate of expansion, the low-pressure cylinder being only six times the capacity of the high-pressure, with a working pressure of 170 lbs. absolute. It is now a very general and convenient practice to make the diameter of the low-pressure cylinder equal to the sum of the diameters of the H.P. and M.P. cylinders; hence—

Diameter of M.P. cylinder = 1·5 diameter of H.P. cylinder.
Diameter of L.P. cylinder = 2·5 diameter of H.P. cylinder.

In this case the ratio of L.P. to H.P. is 6·25; the ratio of M.P. to H.P. is 2·25; and ratio of L.P. to M.P. is 2·78.

(*e.*) When the pressure of steam employed exceeds 190 lbs. absolute, four cylinders should be employed with the steam expanding through each successively; this system is the quadruple compound, and the ratio of L.P. to H.P. should be at least 7·5, and if economy of fuel is of prime consideration it should be 8; then the ratio of first M.P. to H.P. should be 1·8, that of second M.P. to first M.P. 2, and that of L.P. to second M.P. 2·2.

(*f.*) When the power requires two low-pressure cylinders larger than 100 inches diameter, three tandem engines may be designed, as in the case of the S.S. "City of Rome," or an arrangement of three low-pressure cylinders, and one high-pressure cylinder, all of the same diameter.

Compound Engine having Three Low-Pressure and One High-Pressure Cylinders.—This latter arrangement has not, so far, been attempted; but if it should be, the following example will show the results, which may be compared with those of example (5.), page 93. The area of each piston is now $\frac{A}{3}$; suppose the receiver pressure to be 40 lbs., so that the cut-off in each low-pressure cylinder is 0·4 the stroke, then

The effective mean pressure in the H.P. cylinder . . . } $= (72{\cdot}48 - 40) = 32{\cdot}48$ lbs.

The effective mean pressure in each L.P. cylinder . . . } $= (30{\cdot}6 - 4) = 26{\cdot}6$ lbs.

The effective initial load on the H.P. piston . . . . . } $= (80 - 40)\frac{A}{3} = 13{\cdot}3 \times A$ lbs.

The effective initial load on each L.P. piston . . . . . $= (40 - 4)\frac{A}{3} = 12{\cdot}0 \times A$ lbs.

The effective mean load on all four pistons . . . . . $= \frac{A}{3} \times 32{\cdot}48 + 3\left(26{\cdot}6 \times \frac{A}{3}\right) = 37{\cdot}4 \times A$ lbs.

Efficiency of the system . . . $= 0{\cdot}991$.

The efficiency of the steam is nearly the same, and the excess of work in the high-pressure cylinder over that in each of the low-pressure ones is only slight; while the initial load in the high-pressure cylinder is 17 per cent. less than that in the three-cylinder engine.

CHAPTER VI.

EXPANSION OF STEAM, MEAN PRESSURE, &c.

THE diameter of the steam cylinder depends on the piston speed and mean pressure permissible in obtaining the required I.H.P.

The Mean Pressure depends on the initial pressure of the steam and the rate of expansion observed in working, and may be calculated from data given in Table IV.

In Table IV. p_1 is the *absolute initial pressure*; p_m the absolute mean pressure; r the rate of expansion, $\frac{1}{r}$ the cut-off. The calculations are based on the supposition that the steam is *moderately moist*, and expands in accordance with Boyle and Marriott's law ($p\,v = \text{constant}$), so that the pressure varies inversely with the volume.

Then,

$$\text{The mean pressure} = p_1 \frac{1 + \text{hyp. log } r}{r}.$$

The hyperbolic logarithm of a number may be found by multiplying the common logarithm of that number by 2·302585.

$$\text{The terminal pressure} = \frac{p_1}{r}.$$

Therefore,

(1.) Ratio of mean pressure to terminal pressure $= \frac{r p_m}{p_1}$.

(2.) Ratio of terminal pressure to mean pressure $= \frac{p_1}{r p_m}$.

(3.) Ratio of maximum pressure to mean pressure $= \frac{p_1}{p_m}$.

When steam expands in accordance with the law $p\,v = \text{constant}$, the curve drawn through the extremities of ordinates representing the pressure at any position of the piston is a hyperbola. The mean height of such a system of ordinates is found by the formula given above; this mean height will represent the mean pressure.

The mean pressure may be obtained without the aid of logarithms, by resorting to arithmetical calculation of the ordinates, and finding the mean by the method explained in Chapter II.

TABLE IV.

STEAM USED EXPANSIVELY.

r	$\frac{1}{r}$	$\frac{rp_m}{p_1}$	$\frac{p_1}{rp_m}$	$\frac{p_1}{p_m}$	$\frac{p_m}{p_1}$	$\frac{p_m}{p_1}$ Dry.
20	0·050	4·00	0·250	5·00	0·1998	0·186
18	0·055	3·89	0·256	4·63	0·2161	...
16	0·062	3·77	0·265	4·24	0·2358	...
15	0·066	3·708	0·269	4·05	0·2472	...
14	0·071	3·64	0·275	3·85	0·2599	...
13·33	0·075	3·59	0·279	3·72	0·2690	0·254
13	0·077	3·56	0·280	3·65	0·2742	...
12	0·083	3·48	0·287	3·44	0·2904	...
11	0·091	3·40	0·294	3·24	0·3089	...
10	0·100	3·30	0·303	3·03	0·3303	0·314
9	0·111	3·20	0·312	2·81	0·3552	...
8	0·125	3·08	0·321	2·60	0·3849	0·370
7	0·143	2·95	0·339	2·37	0·4210	...
6·66	0·150	2·90	0·345	2·30	0·4347	0·417
6·00	0·166	2·79	0·360	2·15	0·4653	...
5·71	0·175	2·74	0·364	2·08	0·4807	...
5·00	0·200	2·61	0·383	1·92	0·5218	0·506
4·44	0·225	2·50	0·400	1·78	0·5608	...
4·00	0·250	2·39	0·419	1·68	0·5965	0·582
3·63	0·275	2·29	0·437	1·58	0·6308	...
3·33	0·300	2·20	0·454	1·51	0·6615	0·648
3·00	0·333	2·10	0·476	1·43	0·6993	...
2·86	0·350	2·05	0·488	1·39	0·7171	0·707
2·66	0·375	1·98	0·505	1·34	0·7440	...
2·50	0·400	1·91	0·523	1·31	0·7664	0·756
2·22	0·450	1·80	0·556	1·24	0·8095	0·800
2·00	0·500	1·69	0·591	1·18	0·8465	0·840
1·82	0·550	1·60	0·626	1·14	0·8786	0·874
1·66	0·600	1·51	0·662	1·10	0·9066	0·900
1·60	0·625	1·47	0·680	1·09	0·9187	...
1·54	0·650	1·43	0·699	1·07	0·9292	0·926
1·48	0·675	1·39	0·718	1·06	0·9405	...

Example.—Initial pressure 80 lbs., rate of expansion 5. Suppose the length of stroke divided into ten equal parts by points 1, 2, 3, . . . 9, 10. The cut off is $\frac{1}{5}$, or two-tenths the stroke.

The pressure at commence of stroke is					80 lbs.
,,	1 tenth	,,			80 ,,
,,	2 ,,	,,			80 ,,
,,	3 ,,	,,	$\frac{2}{3}$ of 80 or		53·33 ,,
,,	4 ,,	,,	$\frac{2}{4}$,,		40·00 ,,
,,	5 ,,	,,	$\frac{2}{5}$,,		32·00 ,,
,,	6 ,,	,,	$\frac{2}{6}$,,		26·66 ,,
,,	7 ,,	,,	$\frac{2}{7}$,,		22·86 ,,
,,	8 ,,	,,	$\frac{2}{8}$,,		20·00 ,,
,,	9 ,,	,,	$\frac{2}{9}$,,		17·78 ,,
,,	10 ,,	,,	$\frac{2}{10}$,,		16·00 ,,

$$p_m = \tfrac{1}{10}\left(\frac{80+16}{2} + 80 + 80 + 53{\cdot}33 + 40 + 32 + 26{\cdot}66 + 22{\cdot}86 + 20 + 17{\cdot}77\right) = 42{\cdot}063 \text{ lbs.}$$

By reference to Table IV., for the rate of expansion 5, $\frac{p_m}{p_1} = 0{\cdot}5218$, and for 80 lbs. pressure $p_m = 41{\cdot}744$ lbs., or about $\frac{3}{4}$ per cent. less than that given by the summation above, the excess of which is due to the small number of points of observed pressure.

Graphic Method.—Professor Rankine has given* a geometric method of ascertaining the mean pressure, which is of interest and value, and which first appeared in the *Engineer*. Draw a straight line, A B, of definite length, produce it to A C, so that $AC = \frac{AB}{4}$. Through A draw A D at right angles to C A B. With C as centre, and C B as radius draw the arc of a circle, cutting A D at D. Then if $\frac{DA}{DE}$ is the rate of expansion, $\frac{p_m}{p_1} = \frac{EF}{AB}$.

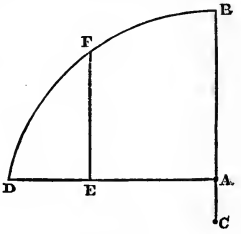

Fig. 24.

To suit this diagram for actual use, A B should be taken of such a length as is convenient for scale measurement, say 4 inches; A D should be divided into ten parts and subdivided into quarters; through the divisions faint lines should be drawn parallel to A B. Scales should be constructed 4 inches long, suitable for the usual pressures coming under consideration.

The object of columns 3, 4, in Table IV., is that mean pressure and initial pressure may be easily determined from terminal pressures, when the rate of expansion is known; or when initial and mean pressures are known, the rate of expansion may be found. Column 5 is given to show the relation between maximum and mean pressures at the various rates of expansion.

Dry Steam.—When steam is dried by superheating, so that it is surcharged with heat, and is capable of very considerable expansion without liquefaction taking place, it expands according to the law of perfect gases, and then

$$\frac{p_m}{p_1} = \frac{17 - 16\,r^{-\frac{1}{16}}}{r}$$

$r^{-\frac{1}{16}}$ may be found by extracting the square root of $\frac{1}{r}$ four times.

$$\left(r^{-\frac{1}{16}} = \sqrt{\sqrt{\sqrt{\sqrt{\frac{1}{r}}}}}\right)$$

Column 6 gives the value of $\frac{p_m}{p_1}$ as calculated from the above

* Rankine, *Rules and Tables*, p. 291.

formula by the late Professor Rankine. It will be seen that, except at very high rates of expansion, there is no very great difference between the ratio as calculated by this method, and by the method for moderately moist steam.

Clearance.—In practice the mean pressure in the cylinder is very materially affected by what is called *clearance.* However accurately the engine is constructed, there is always at commencement of the stroke a space between the piston and cut-off valve, made up of the part of the cylinder between the piston and the cover or cylinder end, and the passage between valve face and cylinder; this is called the *clearance.* Supposing this space is equal to one-tenth of the capacity of the cylinder, and the cut-off is at two-tenths the stroke, the *effective* cut-off is not two-tenths, but something more, due to the fact that the expansion of a volume of steam equalling three-tenths the capacity of cylinder is being effected, instead of that of a volume of two-tenths. This practically amounts to making the cylinder 10 per cent. longer, and cutting off at three-tenths the stroke without clearance. It is, therefore, customary to speak of the clearance as amounting to such a proportion the stroke.

To allow for the effect which the *clearance* will have when steam expands in a cylinder, let r be the nominal rate of expansion as before, and r_1 be the *actual* rate allowing for clearance, c the clearance as a fraction of the cylinder capacity. Then

$$\frac{1}{r_1} = \frac{\frac{1}{r} + c}{1 + c} \quad \text{and } r_1 = r\,\frac{1+c}{1+cr}. \quad . \quad . \quad . \quad \text{(A.)}$$

$\frac{1}{r} + c$ being the volume of steam at cut-off between the piston and the cut-off valve, and which expands to the volume $1 + c$ at the end of the stroke. If there is no cushioning of the steam before admission, then the whole of the space $\frac{1}{r} + c$ must be filled at each stroke with fresh steam.

Then the *real mean absolute pressure* will be

$$p'_m - c(p_1 - p'_m) \quad . \quad . \quad . \quad . \quad \text{(B.)}$$

p'_m is the mean pressure obtained by means of Table IV, the *actual* rate of expansion being taken, and p_1 is the absolute initial pressure. If, however, there is sufficient cushioning to fill the clearance space with steam at the initial pressure, the volume of steam used at each stroke will be only that swept by the piston at cut-off and equal to $\frac{1}{r}$.

Compression or Cushioning—There will be an increase of back pressure caused by this cushioning, and its effect on the mean pressure is as follows:—

Let p'_m be the mean absolute pressure due to the *effective* cut-off $\frac{1}{r_1}$; p_0 the absolute back pressure; c the clearance; and p_1 the absolute initial pressure as before.

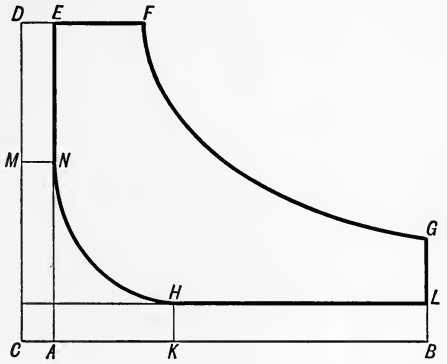

Fig. 25.

Fig. 25 is the indicator-diagram of an engine working under these conditions. A B is the stroke, A C the clearance, E F the nominal cut-off, and D F the effective. The actual rate of expansion is therefore $\frac{C B}{D F}$. C D represents the initial pressure and H K the back pressure. Cushioning commences at K with the pressure p_0, and at A the pressure is p_1.

The figure C D E H K is the diagram due to the expansion of steam of a volume equalling c at a pressure p_1 to a pressure p_0, so that the rate of its expansion is $\frac{C K}{D E}$. Now $p_1 \times D E = p_0 \times C K$, and, therefore,

$$\frac{p_1}{p_0} = \frac{C K}{D E}.$$

Since p_1 and p_0 are both known the rate of expansion is known, and by referring to Table IV. the mean pressure p''_m due to this rate of expansion is found.

The area H E F G = area C D F G B − (area C D E H K + area H K B).

„ C D F G B $= p'_m \times (A B + A C) = p'_m (1 + c)$.

„ H K B $= p_0 (A B - A K) = p_0 \left(1 - (c \frac{p_1}{p_0} - c)\right)$.

„ C D E H K $= p''_m (C K) = p''_m \left(\frac{p_1}{p_0} c\right)$.

„ H E F G $= p_m \times 1$, or the effective mean pressure.

Therefore, the effective mean pressure

$$= p'_m (1+c) - \left\{1 - c\left(\frac{p_1}{p_0} - 1\right)\right\} p_0 - p''_m \left(\frac{p_1}{p_0} - c\right)$$

$$= p'_m \times c\ (p'_m - p_0) + c p_1 \left(1 - \frac{p''_m}{p_0}\right) - p_0$$

$$= (p'_m - p_0)\ (1+c)\ + c p_1 \left(1 - \frac{p''_m}{p_0}\right) \quad . \quad . \quad . \quad . \quad (C.)$$

General Effect of Clearance and Cushioning.—Let p', the absolute initial pressure, be represented in Fig. 25 by C D, p_0 the back pressure by B L, A B the length of stroke, A C the clearance c, A K the compression x, E F the nominal cut-off, r the nominal rate of expansion, r_1 the real rate of expansion, &c., &c., as before. p'_m the mean pressure due to an initial pressure p', and a rate of expansion r_1; p_m the real mean pressure of N E F G L H.

As before

$$r_1 = \frac{1+c}{\frac{1}{r}+c} = r\,\frac{1+c}{1+cr} \quad . \quad . \quad . \quad (1.)$$

Since the steam at point K is shut up in a space $x+c$, and is compressed into a space c, the *rate of compression* is $\frac{x+c}{c}$; and the pressure after compression at N is $p^c = \frac{x+c}{c} p_0$, and represented by A N or C M; let p^c_m be the mean pressure of the figure M N H K C, which is that due to a pressure $\frac{x+c}{c} p_0$, and a rate of expansion $\frac{x+c}{c}$.

The area N E F G L H = C D F G B – D E N M – M N H K C – K H L B.

„ N E F G L H $= p_m \times 1$.

„ C D F G B $= p'_m (1+c)$.

„ D E N M $= \left(p' - p_0 \frac{x+c}{c}\right) c = (p' - p_0)\, c - p_0 x$.

„ M N H K C $= p^c_m (x+c)$.

„ K H L B $= p_0 (1-x)$.

Therefore,

$$p_m = p'_m (1 + c) - \{(p' - p_0)\, c - p_0 x\} - p^c{}_m (x + c) - p_0 (1 - x).$$
$$= p'_m (1 + c) - p'c - p_0 (1 - 2x - c) - p^c{}_m (x + c) \quad . \quad (2.)$$

Example I.—To find the effective mean pressure in a cylinder having a clearance space equal to one-seventh its capacity, the initial pressure 80 lbs. absolute, the back pressure 10 lbs. absolute, and the nominal cut-off $\frac{1}{5}$ the stroke:

(1.) If no compression

$$r = 5\,\frac{1+\frac{1}{7}}{1+\frac{5}{7}} = 5 \times \tfrac{8}{12} = 3{\cdot}33.$$

By reference to Table IV. $\frac{p_m}{p_1} = 0{\cdot}6615$ for a rate of expansion = 3·33.

Then

$$p'_m = 80 \times 0{\cdot}6615 = 52{\cdot}92 \text{ lbs.},$$

and

The effective mean pressure = 52·92 − 10 = 42·92 lbs.

(2.) If full compression to 80 lbs.: Here

Rate of compression

$$r_0 = \frac{p_1}{p_0} = \frac{80}{10} = 8.$$

Therefore,

$$\frac{p^c{}_m}{p_0} = \frac{r_0 p^c{}_m}{p_1} = 3{\cdot}08 \text{ (Table IV.)}$$

$$p'_m = 52{\cdot}92 \text{ lbs. as before.}$$

Then the effective mean pressure by formula (C), p. 122,

$$= (52{\cdot}92 - 10)\,(1 + \tfrac{1}{7}) + \tfrac{80}{7}\,(1 - 3{\cdot}08).$$

$$= \tfrac{8}{7} \times 42{\cdot}92 - \frac{166{\cdot}4}{7} = 25{\cdot}28 \text{ lbs.}$$

If there was no clearance, the effective mean pressure would be 41·74 − 10, or 31·74 lbs.

The steam used in the case (2.) is the same as if there had been no clearance, and as the effective mean pressure was only 25·28 lbs., there is a *loss due to clearance* of 6·46 lbs., or 20 per cent. In case (1.) the quantity of steam used is $\frac{2}{3\frac{5}{5}}$ the volume of the cylinder per stroke, or one-seventh of the volume in excess of the quantity with no clearance, so that with this increase of steam, if there was no clearance and the rate of expansion 5, there should be an increase in the work done, and that increased work

will be to the work done by the smaller quantity of steam as 12 is to 7.

The equivalent mean effective pressure is then $\frac{12}{7}$ of 31·74, or 54·41, as against 42·92 lbs. which was obtained, showing a loss of 11·49 lbs., or 21 per cent.

The example given is a very extreme case, and such as would be rarely found in practice. The effect of clearance in the high-pressure cylinder of a compound engine may be seen in the following.

Example II.—The nominal rate of expansion is 2, the initial absolute pressure 90 lbs., and the absolute back pressure 22½ lbs., the clearance being one-ninth the capacity of the cylinder.

(1.) No compression:

$$r = 2\frac{1+\frac{1}{9}}{1+\frac{2}{9}} = 1{\cdot}82.$$

By reference to Table IV. $\frac{p_m}{p_1} = {\cdot}8786$ for a rate of expansion of 1·82.

Then $p_m = 90 \times 0{\cdot}8786 = 79$ lbs.

Mean effective pressure = 79 − 22·5, or 56·5 lbs.

The equivalent mean pressure when $\frac{1}{2} + \frac{1}{9}$ or $\frac{11}{18}$ of the volume of the cylinder of steam is used will be $\frac{11}{9}$ of 53·68 lbs., or 65·61 lbs., showing a loss by clearance of 13·88 per cent.

(2.) If full compression to 90 lbs.:

Here $\frac{p_1}{p_0} = 4$, which is the *rate of compression*; so that

$$\frac{p^{\circ}_m}{p_0} = \frac{r_0\, p^{\circ}_m}{p_1} = 2{\cdot}39. \quad . \quad . \quad . \quad . \quad . \quad . \quad \text{Table IV.}$$

The effective mean pressure by formula (C) p. 122,

$$= (79 - 22{\cdot}5)\,(1 + \tfrac{1}{9}) + \tfrac{90}{9}\,(1 - 2{\cdot}39)$$
$$= 62{\cdot}77 - 13{\cdot}9 = 48{\cdot}87 \text{ lbs.}$$

Thus showing a loss of 5·81 lbs., or 10·8 per cent. only. The loss from the clearance in the compound is not so serious as in the expansive engine, as the steam in the former (which has passed from the high-pressure cylinder without giving out its full work), will do more work in the low-pressure cylinder; whereas, with the expansive engine, the exhaust steam passes direct to the condenser at a higher pressure than when there is no clearance. Further, since the cut-off in an expansive engine is much earlier than in the compound, and the clearance from practical considerations is very much the same, the ratio of clearance to volume at cut-off will be much higher in the former than in the latter.

The beneficial effect of cushioning is seen in both the preceding examples, but its value is greater still when the cut-off in the high-pressure cylinder is somewhat earlier, as may be seen by the following.

Example III.—The cut-off in the cylinder of example (2.) is altered to $\frac{1}{4}$ the stroke, so that the nominal rate of expansion is 4.

(1.) No compression:

$$r = 4\,\frac{1+\frac{1}{9}}{1+\frac{4}{9}} = 3.$$

Then

$$p_m = 62{\cdot}1 \text{ lbs.},$$

and the effective mean pressure = 62·1 − 22·5 = 39·6 lbs.

The equivalent mean pressure due to the amount of steam used is now $\frac{13}{9}$ of 31·185, or 45 lbs., thus showing a loss of 12 per cent.

(2.) If full compression to 90 lbs.:

The effective mean pressure by formula (C)

$$= (62{\cdot}1 - 22{\cdot}5)\ \tfrac{10}{9} + \tfrac{90}{9}\ (1 - 2{\cdot}39)$$
$$= 44 - 13{\cdot}9 = 30{\cdot}1 \text{ lbs.}$$

Thus showing a loss of 1·085 lbs., or 3·4 per cent. only.

The economy effected by working with a considerable amount of cushioning is, therefore, very appreciable, and practice has proved the correctness of this.

In actual practice, however, it seldom happens that so much cushioning can be effected as to fill the clearance space with steam of pressure equal to that of the entering steam; but still even what is conveniently obtained materially adds to the economic working of the engine. It must not, however, be forgotten that the effective mean pressure is considerably reduced by cushioning.

Mean Pressure in a Compound Engine.—If the effective mean pressure in the high-pressure cylinder of a compound engine be divided by the ratio of capacity of low-pressure to that of the high-pressure cylinder, the quotient represents the mean pressure necessary to do the same work in the low-pressure cylinder as is effected in the high-pressure cylinder. If this be added to the effective mean pressure in the low-pressure cylinder, the sum will be the mean pressure necessary to obtain from the low-pressure cylinder alone the whole work done by both cylinders, and may be called the *equivalent mean pressure.* If there be no loss of mean pressure, owing to drop in the receiver, or other cause, this equivalent mean pressure will be the same as the effective mean pressure obtained by the steam expanding in one cylinder at the same rate as the total expansion effected in both cylinders of the compound engine. In the two-cylinder receiver form of compound engine, there is sometimes a considerable fall in pressure from the release point to the exhaust, owing to the low pressure maintained in the receiver.

(1.) Two-cylinder receiver compound engine.

Let p_1 be the initial pressure, p_0 the back-pressure in the low-pressure cylinder, p_r the pressure in the receiver and back-pressure in the high-pressure cylinder; R the ratio of cylinder capacities, r the total rate of expansion, r_1 the rate of expansion in the high-

pressure cylinder, and r_n that in the low-pressure cylinder; p'_m the mean pressure due to an initial pressure, p_1, and a rate of expansion, r_1 : p''_m, the mean pressure due to an initial pressure, p_r, and a rate of expansion r_n. P_m is the mean pressure due to a rate of expansion, r, and an initial pressure p_1 :

The effective mean pressure in the high-pressure cylinder is then $(p'_m - p_r)$; and that in the low-pressure cylinder is $(p''_m - p_0)$.

Also

$$P_m = p_1 \frac{1 + \text{hyp. log. } r}{r},$$

$$p'_m = p_1 \frac{1 + \text{hyp. log. } r_1}{r_1},$$

$$p''_m = p_r \frac{1 + \text{hyp. log. } r_2}{r_2}.$$

Since the work performed in the engine is supposed to be equally divided between the two cylinders,

$$p'_m - p_r = R\,(p''_m - p_0). \quad . \quad . \quad . \quad . \quad (1.)$$

But if there be no loss due to "drop," and the mean pressure in the high-pressure to be referred to the low-pressure cylinder.

Then

$$\frac{p'_m - p_r}{R} + (p''_m - p_0) = P_m - p_0.$$

By substituting the value of $(p'_m - p_r)$ of (1.) in the above

$$\left.\begin{aligned} p''_m - p_0 &= (P_m - p_0)\tfrac{1}{2} \\ \text{and} \quad p'_m - p_r &= (P_m - p_0)\frac{R}{2} \end{aligned}\right\} \quad . \quad . \quad . \quad (2.)$$

Let x be the efficiency of the system, so that $(1 - x)$ is the proportion of loss due to drop.

Then

$$\left.\begin{aligned} p''_m - p_0 &= x\,(P_m - p_0)\tfrac{1}{2} \\ \text{and} \quad p'_m - p_r &= x\,(P_m - p_0)\frac{R}{2} \end{aligned}\right\} \quad . \quad . \quad . \quad (3.)$$

To find the *actual* mean pressures when there is loss due to "drop," the value of x must be determined; this may be done by substituting the value of p'_m and p''_m, found by the preceding formulæ; but an approximate value may be found by determining the value of p_r in equation (3.); from the value thus found calculate

p''_m, and referring the mean pressures of both cylinders to the low-pressure cylinder. If $(P'_m - p_0)$ be the equivalent mean pressure thus found, then, approximately,

$$x = \frac{P'_m - p_0}{P_m - p_0}. \quad . \quad . \quad . \quad . \quad . \quad (4.)$$

Example.—To find the mean pressure in a compound engine using steam of 90 lbs. absolute pressure, the total rate of expansion being 7, the ratio of the cylinder capacities 3·5, and the back pressure 4 lbs.

$$P_m = 90 \times 0{\cdot}421 = 37{\cdot}89 \text{ lbs.} \quad . \quad \text{Table IV.}$$

$$r_1 = 7 \div 3{\cdot}5 = 2.$$

Then

$$p'_m = 90 \times 0{\cdot}8465 = 76{\cdot}18 \text{ lbs.} \quad . \quad . \quad \text{Table IV.}$$

$$p_r = 76{\cdot}18 - \frac{3{\cdot}5}{2}(37{\cdot}89 - 4) = 16{\cdot}88 \text{ lbs.}$$

$$r_2 = \frac{p_r r}{p_1} = \frac{16{\cdot}88 \times 7}{90} = 1{\cdot}313,$$

$$p''_m = 16{\cdot}88 \frac{1 + \text{hyp. log. } 1{\cdot}313}{1{\cdot}313} = 16{\cdot}36.$$

That is, the effective mean pressure in high-pressure cylinder is 76·18 – 16·88, or 59·3 lbs., and that in low-pressure cylinder is 16·36 – 4, or 12·36. Referred to low-pressure cylinder alone,

$$P'_m - p_0 = 12{\cdot}36 + \frac{59{\cdot}3}{3{\cdot}5} = 29{\cdot}3 \text{ lbs.}$$

$$P_m - p_0 = 37{\cdot}89 - 4 = 33{\cdot}89 \text{ lbs.}$$

Therefore,

$$x = \frac{29{\cdot}3}{33{\cdot}89} = 0{\cdot}865.$$

Then, actual effective mean pressure in high-pressure cylinders $= 0{\cdot}865\ (37{\cdot}89 - 4)\ \frac{3{\cdot}5}{2} = 51{\cdot}3$ lbs.

Then, actual effective mean pressure in low-pressure cylinder $= 0{\cdot}865\ (37{\cdot}89 - 4)\frac{1}{2} = 14{\cdot}65$ lbs.

And the actual pressure in receiver is then $= 76{\cdot}18 - \frac{3{\cdot}5}{2}(29{\cdot}3) = 24{\cdot}88$ lbs.

(2.) *The three-cylinder receiver compound engine, having two low-pressure cylinders.* Ratio of each low-pressure cylinder to the high-pressure is $\frac{R}{2}$.

In this case only one-third of the work is done in each cylinder. Then

$$p'_m - p_r = \frac{R}{2}(p''_m - p_0), \quad . \quad . \quad . \quad (1.)$$

and as

$$\frac{p'_m - p_r}{R} + (p''_m - p_0) = P_m - p_0.$$

Then

$$p''_m - p_0 = \tfrac{2}{3}(P_m - p_0)$$

and

$$p'_m - p_r = \frac{R}{3}(P_m - p_0) \quad . \quad . \quad . \quad (2.)$$

Also the actual values

$$p''_m - p_0 = \tfrac{2}{3}(P_m - p_0)\,x$$

$$p'_m - p_r = \frac{R}{3}(P_m - p_0)\,x \quad . \quad . \quad . \quad (3.)$$

Example.—To find the mean pressures in a three-cylinder compound engine (having two low-pressure cylinders), using steam of 90 lbs. absolute pressure, the total rate of expansion being seven, the ratio of the combined capacity of the low-pressure cylinder to that of the high-pressure being 3·5, and the back pressure 4 lbs.

$$P_m = 90 \times 0{\cdot}421 = 37{\cdot}89 \text{ lbs.},$$

$$r_1 = \frac{r}{R} = 7 \div 3{\cdot}5 = 2,$$

$$p'_m = 90 \times 0{\cdot}8465 = 76{\cdot}18 \text{ lbs.},$$

$$p_r = 76{\cdot}18 - \frac{3{\cdot}5}{3}(37{\cdot}89 - 4) = 36{\cdot}64 \text{ lbs.},$$

$$r_2 = \frac{p_r r}{p_1} = \frac{36{\cdot}64 \times 7}{90} = 2{\cdot}85,$$

$$p''_m = 36{\cdot}64 \frac{1 + \text{hyp. log. } 2{\cdot}85}{2{\cdot}85} = 26{\cdot}4.$$

Then the mean effective pressure in the high-pressure cylinder . } $= 76{\cdot}18 - 36{\cdot}64 = 39{\cdot}54$ lbs.

Then the mean effective pressure in the low-pressure cylinder . } $= 26{\cdot}4 - 4 = 22{\cdot}4$ lbs.

Then

$$P'_m - p_0 = 22{\cdot}4 + \frac{39{\cdot}54}{3{\cdot}5} = 32{\cdot}7 \text{ lbs.}$$

Then

$$x = 32{\cdot}7 \div 33{\cdot}89 = 0{\cdot}965.$$

Then actual effective mean pressure in high-pressure cylinder . . . $= \frac{3{\cdot}5}{3}(37{\cdot}89 - 4) \times 0{\cdot}965 = 38{\cdot}15$ lbs.

Then actual effective mean pressure in each low-pressure cylinder . . . $= \frac{2}{3}(37{\cdot}89 - 4) \times 0{\cdot}965 = 21{\cdot}8$ lbs.

(3.) *The three-cylinder compound continuous expansion engine, having one high-pressure, one low-pressure, and one medium pressure cylinder.*

R is the ratio of low-pressure to high-pressure cylinder; R_1 the ratio of low-pressure to mean-pressure cylinder; p' the initial pressure, &c., as before.

p'_m the mean pressure due to expansion, r_1, and pressure p',
p''_m ,, ,, ,, r_2, ,, p'',
p'''_m ,, ,, ,, r_3, ,, p'''.

p'' is the pressure in the receiver between high-pressure and mean-pressure cylinders, p''' that in the receiver between mean-pressure and low-pressure cylinders.

Then effective mean pressure in high-pressure cylinder $= p'_m - p''$,
,, ,, mean-pressure ,, $= p''_m - p'''$,
,, ,, low-pressure ,, $= p'''_m - p^0$.

Then if there is no loss due to drop,

$$p'_m - p'' = R\,(p'''_m - p^0); \text{ and } p''_m - p''' = R_1\,(p'''_m - p^0) \quad . \quad (1.)$$

But

$$P_m - p^0 = p'''_m - p^0 + \frac{p''_m - p'''}{R_1} + \frac{p'_m - p''}{R}.$$

Therefore

$$\left.\begin{aligned} p'''_m - p^0 &= \frac{P_m - p^0}{3} \\ p''_m - p''' &= \frac{R_1}{3}(P_m - p^0) \\ p'_m - p'' &= \frac{R}{3}(P_m - p^0). \end{aligned}\right\} \quad . \quad . \quad . \quad (2.)$$

This is true when there is no loss from "drop;" but as in practice there is generally some loss from this cause, an approximation must be found in a similar way to that for the two-cylinder compound engine.

The cut-off in the high-pressure cylinder will be, as before,

$$\frac{1}{r_1} = \frac{R}{r}.$$

The cut-off in mean-pressure cylinder in order to maintain a pressure, p'', in the receiver between it and the high-pressure cylinder can be found in the same way as before. Since R is the ratio of low-pressure to high-pressure cylinder, and R_1 that of low-pressure to mean-pressure cylinder, $\frac{R}{R_1}$ will be the ratio of mean pressure to high-pressure cylinder.

Then

$$\frac{p''}{r_2} \times \frac{R}{R_1} = \frac{p'}{r_1}$$

and

$$\frac{1}{r_2} = \frac{R_1}{R} \times \frac{p'}{p''} \times \frac{1}{r_1}.$$

Substituting the value of $\frac{1}{r_1}$. Then, $\frac{1}{r_2} = R_1 \frac{p'}{p'' r}$.

The cut-off in low-pressure cylinder to maintain a pressure, p''', in the receiver between it and the mean-pressure cylinder,

$$\frac{1}{r_3} = \frac{1}{R_1} \times \frac{p''}{p'''} \times \frac{1}{r_2}.$$

Substituting the value of $\frac{1}{r_2}$. Then, $\frac{1}{r_3} = \frac{p'}{p''' r}$.

But since the terminal pressure in the low-pressure cylinder will be that due to an initial pressure, p', and a rate of expansion, r.

Then

$$\frac{p'}{r} = \frac{p'''}{r_3}; \text{ or } \frac{1}{r_3} = \frac{p'}{p''' r}.$$

Therefore,

$$\left.\begin{aligned} &\text{Cut-off in high-pressure cylinder} = \frac{R}{r} \\ &\text{,, mean-pressure ,,} = R_1 \times \frac{p'}{p'' r} \\ &\text{,, low-pressure ,,} = \frac{p'}{p''' r} \end{aligned}\right\} . \quad (3.)$$

To avoid any lengthy or elaborate calculations, a result sufficiently accurate for practical purposes may be obtained by assuming a value for x, and using it only in the first step of the calculation. This value will vary from 1·0 to 0·9 in well-proportioned engines of this class, when the steam pressure is not less than 120 lbs. absolute, and the rate of expansion not less than 10 times.

Example.—To find the mean pressures in a three-cylinder continuous expansion engine, using steam of 120 lbs. absolute pressure, and expanding 12 times. The ratio of low-pressure to high-pressure cylinder being 6, and of low-pressure to mean-pressure cylinder, 2·5; the back pressure in low-pressure cylinder being 4 lbs.:

Assume $x = 0{\cdot}9$.

$$\left.\begin{aligned} P_m &= 120 \times 0{\cdot}2904 = 34{\cdot}85 \text{ lbs.} \\ p'_m &= 120 \times 0{\cdot}8465 = 101{\cdot}58 \text{ lbs.} \end{aligned}\right\} \text{ Table IV.}$$

$$p'_m - p'' = \tfrac{6}{5}\,(34{\cdot}85 - 4) \times 0{\cdot}9 = 55{\cdot}53 \text{ lbs.}$$

Therefore,

$$p'' = 101{\cdot}58 - 55{\cdot}53 = 46{\cdot}05 \text{ lbs.}$$

Now,

$$\frac{1}{r_2} = 2{\cdot}5 \times \frac{120}{46{\cdot}05 \times 12} = {\cdot}544\,; \text{ or } r_2 = 1{\cdot}838.$$

Then,

$$p''_m = p'' \frac{1 + \text{hyp. log. } 1{\cdot}838}{1{\cdot}838} = 38 \text{ lbs.}$$

If the work performed in the second cylinder is to equal that done in the first, then

$$p''_m - p''' = \frac{R_1}{R} \times 55{\cdot}53 = \frac{2{\cdot}5}{6} \times 55{\cdot}53 = 23{\cdot}14 \text{ lbs.}$$

Then

$$p''' = 38 - 23{\cdot}14 = 14{\cdot}86 \text{ lbs.}$$

$$\frac{1}{r_3} = \frac{120.}{14{\cdot}86 \times 12}, \qquad \text{or } r_3 = 1{\cdot}486$$

$$p'''_m = p''' \frac{1 + \text{hyp. log. } 1{\cdot}486}{1{\cdot}486} = 13{\cdot}96 \text{ lbs.}$$

$$p'''_m - p_0 = 13{\cdot}96 - 4 = 9{\cdot}96 \text{ lbs.}$$

Therefore, the mean pressures are 55·53 lbs., 23·14 lbs., and 9·96 lbs.

Referred to the low-pressure cylinder,

$$P'_m - p_0 = 9{\cdot}96 + \frac{23{\cdot}14}{2{\cdot}5} + \frac{55{\cdot}53}{6} = 28{\cdot}471,$$

$$P_m - p_0 = 30{\cdot}85.$$

Therefore,

$$x = \frac{28{\cdot}471}{30{\cdot}85} = 0{\cdot}923.$$

So that if the work is exactly equally divided between the cylinders, then—

Mean pressure in L.P. cylinder

$$= \frac{P_m - p_0}{3} 0{\cdot}923 = \frac{30{\cdot}85}{3} \times 0{\cdot}923 = 9{\cdot}49 \text{ lbs.}$$

Mean pressure in M.P. cylinder

$$= \frac{R_1}{3} (P_m - p_0)\, 0{\cdot}923 = \frac{2{\cdot}5}{3} \times 30{\cdot}85 \times 0{\cdot}923 = 23{\cdot}72 \text{ lbs.}$$

Mean pressure in H.P. cylinder

$$= \frac{R}{3} (P_m - p_0)\, 0{\cdot}923 = \frac{6}{3} \times 30{\cdot}85 \times 0{\cdot}923 = 56{\cdot}94 \text{ lbs.}$$

Actual Mean Pressure in Practice.—In the preceding pages, the mean pressure spoken of is only such as would be obtained from a *perfect* engine, and as such is what may be called the *theoretical mean pressure.* In an actual engine, however carefully designed and manufactured, there will be certain causes of loss of pressure, so that the actual indicator-diagram will show a mean pressure considerably less than that due to the initial pressure and the rate of expansion.

The following are the principal causes of loss of pressure in the cylinder of a marine engine :—

(1.) **Friction in the Stop-valves on the Boiler and Engine, and in the Pipes connecting these.**—If the initial pressure is taken as that in the slide-valve case, of course this particular loss does not affect the indicator-diagram at all. If the stop-valves are opened to the extent of one-quarter of their diameter, and the steam-pipe is of sufficient diameter, so that the flow of steam at any point does not exceed a velocity of 8000 feet per minute: the loss of pressure at the valve-case will be very slight, and not exceed $2\frac{1}{2}$ per cent. If the capacity of the valve-case is nearly equal to that of the cylinder at the cut-off point, the loss will be still less, as the case then acts as a reservoir in which steam is stored between the cut-off and admission periods.

(2.) **Friction or Wire-drawing of the Steam during admission and cut-off.**—This is the principal cause of loss of pressure in most marine engines, and is generally due to defective valve-gear, combined with small steam ports and passages. If the opening to steam during admission is small at the most, and the valve closes slowly, large passages and ports are of no avail; and, on the other hand, if the passages are contracted, there will be considerable loss of pressure

in the cylinder, however efficient the valve-gearing may be. But the slow and limited motion of the valve itself is the most serious obstacle to the obtaining of good diagrams. The slow opening of the valve causes no loss, as the piston speed is low at that period. A perfect valve should open wide enough to allow the steam to pass at a velocity of 8000 feet per minute, and remain open until cut-off, which should take place quickly; the valve should remain closed until very nearly the end of the stroke, when it should open quickly and wide to *exhaust;* the slow closing to *exhaust*, and slow opening to *lead*, are of no consequence, and cause no practical loss. The loss of pressure from these causes with engines having common slide-valves, and the ordinary link-motion, is very great; especially is this the case when steam is cut-off early in the stroke, by the main valves being set with very little lead, and having only single ports. As has already been stated, the steam becomes superheated by the friction, and so is more efficient during expansion than it would otherwise be.

When cut-off is effected by means of special valve-gear, or by a separate cut-off valve, the pressure at cut-off is very little below that in the valve-casing, and sometimes equal to it; when effected by the ordinary single-ported slide valve and link-motion, the pressure at cut-off is sometimes as much as 15 per cent., and seldom less than 7½ per cent. below that in the valve-case.

(3.) **Liquefaction during Expansion**, partly due to the cooling action of the walls of the cylinder, is a frequent source of loss of pressure, and this is especially so in expansive engines working with moist steam in unjacketed cylinders; and is observable also, though in a smaller degree, in all compound engines working under similar circumstances.

(4.) **Exhausting before the Piston has reached the end of its stroke**, although conducive to the good working of a fast-running engine, will show a loss of pressure in the indicator-diagram. The loss from this cause is, however, more imaginary than real.

(5.) **Compression and Back Pressure due to "Lead,"** also tend to reduce the mean pressure of the diagram when compared with the *theoretical mean pressure.* But these are both essential to the good working of an engine, and (as has been shown in a previous part of this chapter) compression tends to balance the loss due to clearance.

(6.) **Friction in the Ports, Passages, and Pipes**, between the cylinder and condenser, produces a loss of pressure, and, although not large when the velocity through them does not exceed 6,000 feet per minute, sometimes amounts to 2 or 3 lbs. in badly designed engines.

(7.) **Clearance** has been shown to serve to increase the mean pressure beyond that due to the nominal rate of expansion, and therefore cannot be reckoned as a source of loss, unless the *equivalent* cut-off is taken to obtain the rate of expansion.

It will be seen, then, that the actual mean pressure expected to be

obtained from the indicator-diagram of an engine depends very much on the proportion and arrangement of the cylinders and their valves, &c., and in calculating the *expected* mean pressure from the *theoretical mean pressure*, due allowance must be made in each individual case.

If the Theoretical Mean Pressures be calculated by the methods laid down in this chapter, and the necessary corrections made for *clearance* and compression, the *expected* mean pressure may be found by multiplying the results by the factor in the following Table :—

TABLE V.

Particulars of Engine.	Factor.
(1.) Expansive engine, special valve-gear, or with a separate cut-off valve, cylinders jacketed, ...	0·94
(2.) Expansive engine having large ports, &c., and good ordinary valves, cylinders jacketed, . . .	0·9 to 0·92
(3.) Expansive engines with the ordinary valves and gear as in general practice, and unjacketed, ...	0·80 to 0·85
(5.) Compound engines, with expansion valve to H.P. cylinder; cylinders jacketed, and with large ports, &c., .	0·9 to 0·92
(6.) Compound engines, with ordinary slide valves, cylinders jacketed, and good ports, &c., ...	0·8 to 0·85
(7.) Compound engines as in general practice in the merchant service, with early cut-off in both cylinders, without jackets and expansion valves, ...	0·7 to 0·8
(8.) Triple compound engines, with ordinary slide valves, good ports, unjacketed, moderate piston speed, .	0·65 to 0·7
(9.) Fast-running engines of the type and design usually fitted in war-ships, ...	0·6 to 0·7

If no correction be made for the effects of clearance and compression, and the engine is in accordance with general modern practice, the clearance and compression being proportionate, then the Theoretical Mean Pressure may be multiplied by 0·96, and the product again multiplied by the proper factor in Table V., the result being the expected mean pressure.

Example.—To find the expected mean pressure in the cylinders of a marine engine using steam of 60 lbs. absolute pressure, the rate of expansion 4, the clearance equal to one-tenth of the cylinder, and the pressure in the condenser 2 lbs., the valve-gearing specially adapted for an early cut-off, and the ports, passages, &c., of ample size; compression commences at $\frac{3}{4}$ of the stroke. The cylinders are jacketed.

The effective rate of expansion is

$$r_1 = 4\,\frac{1+0{\cdot}1}{1+4\times 0{\cdot}1} = 3{\cdot}143.$$

$$p^{\circ} = \frac{0{\cdot}25+0{\cdot}1}{0{\cdot}1}\times 2 = 7 \text{ lbs.}$$

and the rate of compression 3·5.

Then,

$$p^0_m = 7\ \frac{1 + \text{hyp. log. } 3{\cdot}5}{3{\cdot}5} = 4{\cdot}5 \text{ lbs.}$$

$$p'_m = 60 \times \frac{1 + \text{hyp. log. } 3{\cdot}143}{3{\cdot}143} = 41 \text{ lbs.}$$

Expected mean pressure $= 41\ (1 + 0{\cdot}1) - 60 \times 0{\cdot}1 - 2\ (1 + 0{\cdot}5 - 0{\cdot}1) - 4{\cdot}5\ (\cdot 25 + 0{\cdot}1) = 35{\cdot}3$ lbs.

If the effects of clearance and cushioning be neglected, the mean pressure $= 60 \times 0{\cdot}5965 - 2$, or 33·8 lbs. This is less than the result obtained by the more accurate calculation in this case, because the cushioning is small for so low a back pressure when compared with the clearance.

The mean pressure in practice will be found now by multiplying 35·3 lbs. by 0·94, and is therefore 33·18 lbs.

Example.—To find the expected mean pressure in the cylinders of a compound engine using steam of 100 lbs. absolute pressure, the cut-off in both high-pressure and low-pressure cylinders being at half stroke; the clearance in both cylinders is equal to one-tenth of their net capacity; the pressure in the condenser is 2 lbs.; the cylinders are jacketed, and the ports, &c., of ample size, no expansion valves. Compression commences at $\frac{3}{4}$ the stroke. Cylinder ratio 4.

Here the effective rate of expansion $= 2\ \frac{1 + 0{\cdot}1}{1 + 2 \times 0{\cdot}1} = 1{\cdot}83.$

The theoretical pressure in the receiver $= \frac{100}{1{\cdot}82} \times \frac{2}{4} = 27{\cdot}3$ lbs.

The *expected* pressure in receiver $= 27{\cdot}3 \times 0{\cdot}85 = 23{\cdot}2$ lbs.

The steam is compressed in high-pressure cylinder to

$$p^0 = \frac{\frac{1}{4} + \frac{1}{10}}{\frac{1}{10}} \times 23{\cdot}2 = 81{\cdot}2 \text{ lbs.}$$

$$\text{The rate of compression} = \frac{\frac{1}{4} + \frac{1}{10}}{\frac{1}{10}} = 3{\cdot}5.$$

The mean pressure due to a rate of expansion 1·83, and an initial pressure of 100 lbs.

$$= 100 \frac{1 + \text{hyp. log. } 1{\cdot}83}{1{\cdot}83} = 87 \text{ lbs.}$$

The mean pressure due to a rate of expansion 3·5, and an initial pressure of 81·2 lbs.

$$= 81{\cdot}2\ \frac{1 + \text{hyp. log. } 3{\cdot}5}{3{\cdot}5} = 52 \text{ lbs.}$$

The theoretical mean pressure in high-pressure cylinder

$$= 87\ (1 + 0{\cdot}1) - 100 \times 0{\cdot}1 - 23{\cdot}2\ (1 - 0{\cdot}5 - 0{\cdot}1) - 52\ (0{\cdot}25 + 0{\cdot}1)$$
$$= 58{\cdot}22 \text{ lbs.}$$

The *expected mean pressure* in high-pressure cylinder

$$= 58{\cdot}22 \times 0{\cdot}85 = 49{\cdot}5 \text{ lbs.}$$

The mean pressure due to a rate of expansion 1·83, and an initial pressure of 23·2 lbs.

$$= 23{\cdot}2\ \frac{1 + \text{hyp. log. } 1{\cdot}83}{1{\cdot}83} = 20{\cdot}2 \text{ lbs.}$$

The mean pressure due to a rate of expansion 3·5, and an initial pressure of 7 lbs. = 4·5 lbs.

Then theoretical mean pressure in low-pressure cylinder

$$= 20{\cdot}2\ (1 + 0{\cdot}1) - 23{\cdot}2 \times 0{\cdot}1 - 2\ (1 - 0{\cdot}5 - 0{\cdot}1) - 4{\cdot}5\ (0{\cdot}25 + 0{\cdot}1)$$
$$= 17{\cdot}5 \text{ lbs.}$$

And the *expected mean pressure* in low-pressure cylinder.

$$= 17{\cdot}5 \times 0{\cdot}85 = 14{\cdot}87 \text{ lbs.}$$

Example.—To find the expected mean pressure in a compound engine as fitted in ordinary merchant steamers; the cylinders are unjacketed, the boiler pressure 80 lbs. (95 lbs. absolute); the cylinder ratio is 3·5, and the cut-off, effected by common slide-valves, is at half-stroke in the high-pressure cylinder, and 0·6 the stroke in low-pressure cylinder. The clearance in both cylinders is one-twelfth the cylinder capacity. Compression takes place in the high-pressure cylinder, when the piston is 0·2 of its stroke from the end, and in the low-pressure cylinder at 0·3.

Efficiency in this case taken at 0·75.

The effective rate of expansion in high-pressure cylinder

$$= 2\ \frac{1 + \frac{1}{12}}{1 + \frac{2}{12}} = 1{\cdot}86.$$

The theoretical pressure in the receiver $= \frac{95}{1{\cdot}86} \times \frac{1}{3{\cdot}5 \times 0{\cdot}6} = 24{\cdot}3$ lbs.

The expected „ „ $= 24{\cdot}3 \times 0{\cdot}75 = 18{\cdot}23.$

The rate of compression in H.P. cylinder $= \frac{0{\cdot}2 + 0{\cdot}083}{0{\cdot}083} = 3{\cdot}4$, and

the steam is compressed to $18{\cdot}23 \times 3{\cdot}4$, or 62 lbs. The mean pressure due to a rate of expansion of 1·86, and an initial pressure of 95 lbs.

$$= 95\ \frac{1 + \text{hyp. log. } 1{\cdot}86}{1{\cdot}86} = 80 \text{ lbs.}$$

The mean pressure due to a rate of expansion 3·4, and an initial pressure of 62 lbs.

$$= 62 \frac{1 + \text{hyp. log. } 3{\cdot}4}{3{\cdot}4} = 40 \text{ lbs.}$$

Then theoretical mean pressure in high-pressure cylinder

$$= 80(1 + \tfrac{1}{12}) - 95 \times \tfrac{1}{12} - 18{\cdot}23\ (1 - 0{\cdot}4 - \tfrac{1}{12}) - 40(0{\cdot}2 + \tfrac{1}{12}) = 58 \text{ lbs.}$$

And the expected mean pressure in H.P. cylinder

$$= 58 \times 0{\cdot}75 = 43{\cdot}5 \text{ lbs.}$$

The back pressure in the condenser is 2 lbs.
The effective rate of expansion in low-pressure cylinder

$$= \frac{1}{0{\cdot}6} \times \frac{1 + \frac{1}{12}}{1 + \frac{1}{0{\cdot}6}\frac{1}{12}} = 1{\cdot}58.$$

The rate of compression in low-pressure cylinder $= \dfrac{0{\cdot}3 + 0{\cdot}083}{0{\cdot}083} = 4{\cdot}6.$
Steam is compressed in low-pressure cylinder to 4·6 × 2, or 9·2 lbs.
The mean pressure due to a rate of expansion 1·58, and an initial pressure of 18·23 lbs.

$$= 18{\cdot}23 \times \frac{1 + \text{hyp. log. } 1{\cdot}58}{1{\cdot}58} = 16{\cdot}8 \text{ lbs.}$$

The mean pressure due to a rate of expansion 4·6, and an initial pressure 9·2 lbs.

$$= 9{\cdot}2 \times \frac{1 + \text{hyp. log. } 4{\cdot}6}{4{\cdot}6} = 5 \text{ lbs.}$$

Then theoretical mean pressure in low-pressure cylinder

$$= 16{\cdot}8(1 + \tfrac{1}{12}) - 18{\cdot}23 \times \tfrac{1}{12} - 2\,(1 - 0{\cdot}6 - \tfrac{1}{12}) - 5\,(0{\cdot}3 + \tfrac{1}{12}) = 14{\cdot}13 \text{ lbs.}$$

And the *expected mean pressure* in low-pressure cylinder

$$= 14{\cdot}13 \times 0{\cdot}75 = 10{\cdot}6 \text{ lbs.}$$

Practical Method of Calculating the Expected Mean Pressure.—An approximate value for the expected mean pressure in a compound engine, may be found by first calculating the theoretical mean pressure due to the total rate of expansion, subtracting from

it the back pressure in condenser, and dividing by 2, for a two-cylinder engine, by 3 for a triple, and by 4 for a quadruple engine. The result is the mean pressure in the low-pressure cylinder, when there is no loss from "drop." Multiply this by the factor in Table V. (page 134), and again multiply the product by 0·8, and the *result is the expected mean pressure when the work is equally divided between the two cylinders.*

Example.—To find the mean pressures expected in the cylinders of a compound engine, using steam of 90 lbs. absolute pressure, and expanding it six times; the ports being of ample size, and the cylinders jacketed; the cut-off in high-pressure cylinder effected by an expansion-valve, and the pressure in the condenser is 3.

The mean pressure due to a rate of expansion of 6, and initial pressure of 90 lbs. = 90 × ·4653 = 41·8 lbs.

The effective mean pressure = 41·8 − 3 = 38·8 lbs.
" " in L.P. cylinder = 19·4 lbs.

The expected mean pressure in L.P. cylinder . . . . = 19·4 × 0·9 × 0·8 = 13·9 lbs.

If the ratio of the cylinders is 3·5, then
The expected mean pressure in H.P. cylinder = 13·9 × 3·5 = 48·7 lbs.

CHAPTER VII.

PISTON SPEED, STROKE OF PISTON, REVOLUTIONS, SIZE OF CYLINDER, CYLINDER FITTINGS, &c., &c.

THE Indicated Horse-Power depends on the area of piston, speed of piston, and mean pressure exerted by the steam on the piston; the two latter are variable, which *may* be fixed in an arbitrary way within certain limits, but which must generally depend on the particular circumstances of each individual engine. It has been shown in the last chapter how the mean pressure may be calculated for a proposed engine; but it is necessary to know beforehand the speed of piston, before any decision can be made for the size of the pistons of an engine to develop a certain horse-power.

Piston Speed.—The speed of piston depends on the length of stroke and number of revolutions, and the *mean* velocity is equal to twice the length of stroke multiplied by the number of revolutions per minute.

Experience has shown that heavy marine pistons may be run

safely at a velocity of 700 feet per minute, and, in some instances, the pistons of some large vertical engines have been run at a velocity of even 800 feet;* while higher speeds still have been attained in large locomotives, whose pistons move, when run at express speed, at a velocity of 1000 feet per minute. Although there is no difficulty in causing a piston to move at even higher speeds than these, it is doubtful if there would be any advantage in doing so, and the risk of causing serious damage to the cylinders, and precipitating a break-down without any warning, is very great. There is little doubt that a well-fitted piston, moving in a smooth and true cylinder at a speed of 1000 feet per minute, will work well so long as the rubbing surfaces receive a steady lubrication from the moisture of the steam and the oil injected, and there is not the slightest fear of danger under these circumstances; but if a little priming occurs, and the scum carried into the cylinders causes abrasion of the rubbing surfaces, an immense amount of mischief may be caused in a few seconds. Moreover, when the cylinders wear a little out of shape from one cause or other, so that the packing-rings will have lateral motion, the danger increases with the velocity of the piston.

Although the revolutions of a screw engine may be, within certain limits, as few or as many as the designer chooses, experience or prejudice has fixed very closely in practice the limits beyond which it is not considered expedient to go. In the days of the geared engine, the screw revolved three or four times to once of the engine, and no objection was raised to the small screw and the high number of revolutions; later such a thing was deemed very objectionable—on the ground of excessive speed of piston by some engineers, and excessive friction in journals by others. And also the slow-moving engine was quoted as a proof of the economy of slow piston speed and small friction.

The fine lines of the older steamships admitted of the small screw, which was the accompaniment of the engine, by necessity geared. Bluff ships, as now built for mercantile purposes, require a much larger screw for the same power of engine and dimensions of hull than formerly obtained; and it is not to the *slowness* of the pistons that they owe their economy, but rather to the *small number* of strokes per minute made by them in turning the large screw.

An engine requires a certain power to be expended in moving it through *one revolution* to overcome internal resistances; if the number of revolutions is 80 per minute, this power will be double that at 40, and, roughly, will vary directly with the revolutions. But the resistance of the propeller, caused by friction of the water on the surface of the blades, will increase roughly as the square of the revolutions, so that the power expended to overcome this resistance at 80 revolutions is four times that required at 40 revolutions. If now the screw can be so altered with respect to pitch that, at 40 revolutions, the same speed of ship is obtained as

*Piston speeds of 850 to 900 feet per minute are now common in H.M. Navy, both in large and small engines, and with torpedo boat "catchers" and "destroyers" as high as 1100 feet.

at 80 revolutions, the indicated horse-power will be found to be considerably less; and although the *coal consumed per I.H.P.* will not be less, and may possibly be more than before, the consumption per day will be considerably less. Now, although this economy is co-existent with decreased piston speed, it is not due to it.

The object of a high rate of piston velocity is to decrease the piston area, and that generally for the sake of reducing the size of the engine. But an increased velocity may be obtained either by increasing the stroke of piston, or by increasing the number of revolutions; if the former method is adopted, there will be no decrease in the size of engine; but, on the contrary, an increase in space occupied and in the weight. If a high piston speed is obtained by a high number of revolutions, a smaller cylinder will suffice for a certain indicated horse-power than if the same piston speed were obtained by length of stroke alone. In other words, engines which are required to develop a certain power in a minute will vary in size of cylinder inversely as the number of revolutions per minute, all other things remaining constant; and if the cylinders are of the same diameter, the stroke will vary inversely as the number of revolutions.

The piston speed of many engines is governed entirely by circumstances beyond the immediate control or will of the designer. An example of this is the case of the paddle-wheel engine with vertical oscillating cylinders. If the position of the shaft is determined by the structural arrangements of the hull, as is often the case, then the diameter of the wheel is fixed, and the speed of ship fixes the number of revolutions to be made by the wheel; the length of stroke of piston is limited by the distance from the centre of the shaft to the floors or keelson of the ship. Further, if the engineer is free to decide the position of the shaft, any attempt to increase the piston speed by placing the shafting high is frustrated by the fact that, the higher the shaft the larger will be the wheel, and consequently the fewer the revolutions. If the engine is inclined, then the designer may fix the diameter of the wheel to suit the revolutions which he deems most advisable, or he may fix the position of shaft to suit the ship's structure, and still be free to choose the stroke of piston.

Again, the horizontal engine must be designed so as to accommodate itself to the space allotted to it in the ship, which means that only a limited length of stroke is permissible. The revolutions, however, in this case may be varied very considerably; but there is, after all, a limit to the number beyond which any increase will result in very little gain in speed, and a very certain loss of efficiency. If the screw is of comparatively small diameter, owing to the shallow draught of the ship, a higher number of revolutions than usual is absolutely necessary to project a sufficient mass of water back to propel the ship forward with the necessary velocity; and it is the medium number, or that number at which the engine can be run without loss of efficiency so as to obtain the maximum

speed of ship that is so difficult to decide, and which can only be determined with any degree of certainty by experiment.

The one great feature which places the vertical engine so much above all the other forms of screw engine, as an economic and good working machine, is its superior length of stroke. Power for power, the vertical engine always has exceeded the horizontal in this respect; and although in the practice of the past there was no very great difference in this respect between the two types, the tendency is now to make the stroke as long as is possible or convenient in the engines of all ships, and to remain as before in the horizontal engines of war-ships.

The advantages of the long stroke are due to the corresponding decrease in piston area. Two engines of the same power, and working at the same number of revolutions, must have the same volume of cylinder; or, to speak more correctly, the pistons must sweep out the same volume if their efficiency is the same. The crank-shafts will be of the same diameter, and the crank-pins, also, practically of the same dimensions. Now the one with the long stroke will have smaller pistons than the other, consequently the total pressure on the pistons will be smaller—and, in fact, is inversely proportional to the stroke; consequently, the pressure on the guides, crank-pins, and journals will vary in the same way, and the friction on them correspond also. The lateral pressure of the piston packing rings will vary with the diameter, so that any reduction in diameter will produce a corresponding reduction in the friction.

But, perhaps, so far as economy in working is concerned, there is no more important consideration than the reduction in clearance space effected by the reduction in piston area. The steam ports will be nearly the same, whether the engine be long or short stroke; but the space between the piston and cylinder-ends is very considerably reduced, and will vary inversely as the length of stroke, because the distance of piston from the cylinder-ends is constant.

Revolutions.—Although there is a very considerable range for choice of number of revolutions of the engine of most merchant steamers, there are certain well defined limits beyond which very few practical engineers go.

Taking the nominal horse-power to designate the engines, and adopting the following rule to calculate it, D_h being the diameter of the high-pressure cylinder, D_m that of the medium, and D_e that of the low-pressure cylinder, and S the length of stroke, all in inches,

$$\text{N.H.P.} = \frac{D_h^2 + D_m^2 + D_e^2}{100} \sqrt[3]{S}.$$

The following is considered good practice for the engines of merchant steamers :—

TABLE VI.

N.H.P.	Revolutions.	N.H.P.	Revolutions.	N.H.P.	Revolutions.
20	180 to 200	70	120 to 140	140	100 to 115
30	160 to 180	80	115 to 135	180	95 to 110
40	150 to 170	90	110 to 130	200	95 to 105
50	140 to 160	100	105 to 125	250	90 to 100
60	130 to 150	120	100 to 120	upwards	80 to 95

Very few screw engines are now worked below 75 revolutions per minute when in good condition; and it is at this speed that most of the engines of the large mail steamers are kept running on the voyage so long as the weather permits.* The engines of war-ships, for two very good reasons, work at much higher speeds. Their machinery must be light, and go into a small space, so that it is necessary to make an engine of certain dimensions to suit these conditions, and cause it to develop the requisite horse-power by running at a higher number of revolutions. The speed of a war-ship is much higher in proportion to its size than is that of the merchant ship, while the draught of water is no more, and often less. For these reasons the screw of the war-ship is small for the power to be developed, so that even if large engines were admissible to drive the screw, they would be of small advantage, as they would have to move at a high rate. It will be seen, then, that small fast-running engines are a necessity, and especially is this so with modern war-ships, whether armoured or unarmoured. The latter must be as fine as possible, and every ton of weight saved to obtain the very high speeds which their service demands; the former demands every sacrifice to save weight in machinery, for the sake of adding it to the armour and armament.

Since a war-ship has so seldom to steam at full speed, and when she does, it is only for a short period, the short-stroke fast-running engine is not so very objectionable, and rigid economy is quite a secondary consideration in war questions.

The Admiralty have, for many years, given up using N.H.P., and have adopted I.H.P. to designate the size of their engines. The following table gives the number of revolutions at which naval engines are run on their trial trips :—

* The demand for greater speed of ship has caused a corresponding increase in revolutions, so that now even very large engines are run at 70 revolutions regularly, and the tendency is to higher rates still.

TABLE VII.*

I.H.P.	Revolutions.	I.H.P.	Revolutions.	I.H.P.	Revolutions.	I.H.P.	Revolutions.
500	250 to 450	1500	200 to 350	3500	150 to 180	5500	110 to 120
750	230 to 400	2000	200 to 260	4000	140 to 160	6000	105 to 110
1000	220 to 375	2500	175 to 220	4500	130 to 150	6500	100 to 110
1250	210 to 350	3000	150 to 200	5000	115 to 125	10000	100

The stroke of horizontal engines varied from 18 inches of the gun-boat, to 54 inches of the large armour-clad, and the vertical engines of the Navy vary from 18 inches in the torpedo-gunboat, to 51 inches in the first-class cruisers and battle-ships.

Length of Stroke.—For very many years there existed a standard scale for the stroke of the vertical engine of the mercantile marine, and although there was no written law which guided engineers in the choice of this important dimension, it was so well-known that only *the diameter* of the cylinders was mentioned in speaking of the size of engine, and in most of the rules for nominal horse-power used by manufacturing engineers in their dealings with shipowners, no direct allowance was made for length of stroke. Even at the present time, in some districts an engine is called a certain N.H.P. whatever the stroke may be. There is still some semblance of a standard, although competition and differences of opinion are steadily sweeping it away; so long as the expression N.H.P. exists, so long there must be some standard stroke for every power of engine; for the rule for N.H.P. which includes the factor $\sqrt[3]{S}$, is not sufficient by itself, as it is manifestly absurd to suppose that there is only so slight a difference in value as would be given by this rule between two engines whose cylinders are of the same diameter, while the stroke of one is double that of the other.

The following Table (page 144) gives the stroke corresponding to the different powers; the one column giving the standard, and the other the stroke as existing in ordinary every-day practice.

Some engineers go beyond the strokes given in the second column, as, for example, there are engines of 100 N.H.P., having a stroke of 48 ins.; but since, so far, few have made a practice of thus exceeding the old standard, it is unnecessary to comment upon it further than by saying, that such engines will undoubtedly work well, and with economy both as to coal and working expenses, but will be very costly in construction.

The Cylinder, to calculate the Diameter of.—In this, as in all calculations based on *power*, it is better to deal with I.H.P. than N.H.P.; but, as has already been shown, the latter cannot always be avoided. Hence, when the rule is N.H.P. $= \frac{D_h^2 + D_m^2 + D_e^2}{F}$, and R is the ratio of H.P. to L.P. cylinder capacity, and R_1 that of M.P. to L.P.

* The engines of torpedo cruisers are run at as many as 350 revolutions per minute, each with an indicated horse-power of 1500.

	Compound.	Triple.
Diameter of H.P. cylinder	$\sqrt{\frac{\text{N.H.P.} \times \text{F}}{1+\text{R}}}$	$\sqrt{\frac{\text{N.H.P.} \times \text{F}}{1+\frac{\text{R}}{\text{R}_1}+\text{R}}}$
Diameter of L.P. cylinder	$\sqrt{\frac{\text{N.H.P.} \times \text{F} \times \text{R}}{1+\text{R}}}$	$\sqrt{\frac{\text{N.H.P.} \times \text{F} \times \text{R}\,\text{R}_1}{\text{R}\,\text{R}_1+\text{R}+\text{R}_1}}$

(1.)

TABLE VIII.

N.H.P.	Standard Stroke.	Stroke, as in common practice.	N.H.P.	Standard Stroke.	Stroke, as in common practice.
20	12 ins.	15 ins. to 18 ins.	140	33 ins.	33 ins. to 42 ins.
30	15 ins.	18 ins. to 21 ins.	160	33 ins.	33 ins. to 42 ins.
40	18 ins.	20 ins. to 24 ins.	180	36 ins.	36 ins. to 45 ins.
50	21 ins.	24 ins. to 30 ins.	200	36 ins.	36 ins. to 48 ins.
60	24 ins.	24 ins. to 27 ins.	250	39 ins.	39 ins. to 54 ins.
80	27 ins.	27 ins. to 30 ins.	300	42 ins.	42 ins. to 54 ins.
100	30 ins.	30 ins. to 36 ins.	400	45 ins.	45 ins. to 60 ins.
120	30 ins.	30 ins. to 39 ins.	500	48 ins.	48 ins. to 66 ins.

Example.—To find the diameter of the cylinders of a compound engine of 200 N.H.P. The allowance being 30 circular inches per N.H.P., and the ratio of cylinders 3·5.

Here R = 3·5, and F = 30.

Then diameter of H.P. cylinder $= \sqrt{\frac{200 \times 30}{1 + 3{\cdot}5}} = 36{\cdot}5$ ins.

and „ L.P. „ $= \sqrt{\frac{200 \times 30 \times 3{\cdot}5}{1 + 3{\cdot}5}} = 68{\cdot}3$ ins.

If the rule $\text{N.H.P.} = \frac{d^2 + \text{D}^2}{\text{F}_1} \sqrt[3]{\text{S}}$ is to be observed,

then diameter of H.P. cylinder $= \sqrt{\frac{\text{N.H.P.} \times \text{F}_1}{(1 + \text{R})\,\text{S}^{\frac{1}{3}}}}$

and „ L.P. „ $= \sqrt{\frac{\text{N.H.P.} \times \text{F}_1 \times \text{R}}{(1 + \text{R})\,\text{S}^{\frac{1}{3}}}}$

(2.)

Example.—To find the diameter of the cylinders of an engine of 60 N.H.P., the stroke to be 27 ins., and the allowance 100 per N.H.P.; cylinder ratio, 3·75.

Here F = 100; R = 3·75; $\sqrt[3]{S} = 3$.

Then diameter of H.P. cylinder $= \sqrt{\frac{60 \times 100}{(1 + 3{\cdot}75)\,3}} = 20{\cdot}5$ ins.

and „ L.P. „ $= \sqrt{\frac{60 \times 100 \times 3{\cdot}75}{(1 + 3{\cdot}75)\,3}} = 39{\cdot}7$ ins.

Example.—If the stroke of the engine in the first example is to be 48 ins., to find the diameter of cylinders.

By reference to Table VIII., the standard stroke for 200 N.H.P. is 39 ins.

Hence the diameter of H.P. cylinder $= \sqrt{\frac{39}{48} \times 36{\cdot}5^2} = 33$ ins.

and „ L.P. „ $= \sqrt{\frac{39}{48} \times 68{\cdot}3^2} = 61{\cdot}6$ ins.

If the calculations for diameter of cylinders are to be made from the indicated horse-power, and the power is equally divided between the cylinders, whose number is n; let R be the number of revolutions per minute; S the stroke *in feet*; p_m the mean pressure in pounds per square inch.

$$\text{Area of piston} = \frac{(\text{I.H.P.} \div n) \times 33{,}000}{p_m \times \text{R} \times \text{S} \times 2}$$

$$\left.\begin{aligned}\text{Then diameter of cylinder} &= \sqrt{\frac{(\text{I.H.P.} \div n)\,33{,}000}{p_m \times \text{R} \times \text{S} \times \frac{\pi}{4} \times 2}} \\ &= \sqrt{\frac{\text{I.H.P.} \times 21{,}000}{n \times p_m \times \text{S} \times \text{R}}}\end{aligned}\right\} \quad . \quad (3.)$$

Example.—To find the diameter of the two cylinders of a paddle engine which is required to develop 1,200 I.H.P. when working at 30 revolutions per minute; the stroke being 5 feet and the mean pressure 30 lbs.

Diameter of each cylinder $= \sqrt{\frac{1{,}200 \times 21{,}000}{2 \times 30 \times 5 \times 30}} = 53$ inches.

Example.—To find the diameters of the three cylinders of an expansive screw engine to develop 1,500 I.H.P., when working at 80 revolutions per minute; the stroke being 3 feet, and the mean pressure 25 lbs.

Diameter of each cylinder $= \sqrt{\frac{1{,}500 \times 21{,}000}{3 \times 25 \times 3 \times 80}} = 41{\cdot}8$ inches.

Example—To find the diameters of the two cylinders of a compound engine to develop 1,000 I.H.P., when working at 70 revolutions per minute, the stroke being 42 inches, and the mean

pressures 45 lbs. in the high-pressure cylinder, and 12 in the low-pressure cylinder.

$$\text{Diameter of H.P. cylinder} = \sqrt{\frac{1{,}000 \times 21{,}000}{2 \times 45 \times 3{\cdot}5 \times 70}} = 30{\cdot}8 \text{ inches.}$$

$$\text{,, of L.P. ,,} = \sqrt{\frac{1{,}000 \times 21{,}000}{2 \times 12 \times 3{\cdot}5 \times 70}} = 59{\cdot}8 \text{ inches.}$$

Example.—To find the diameters of the cylinders of a compound engine having 1 H.P. and 2 L.P., to develop 6,000 I.H.P., when working at 55 revolutions per minute, the stroke being 72 inches, and the mean pressures 35 lbs. in the high-pressure cylinder, and 20 lbs. in each of the two low-pressure cylinders.

$$\text{Diameter of H.P. cylinder} = \sqrt{\frac{6{,}000 \times 21{,}000}{3 \times 35 \times 6 \times 55}} = 60{\cdot}3 \text{ inches.}$$

$$\text{,, of each L.P. ,,} = \sqrt{\frac{6{,}000 \times 21{,}000}{3 \times 20 \times 6 \times 55}} = 79{\cdot}8 \text{ inches.}$$

Example.—To find the diameters of the cylinders of a triple compound engine to develop 5,000 I.H.P., when working at 80 revolutions per minute, the stroke being 60 inches, and the pressures in H.P. cylinder 65 lbs., in M.P. cylinder 28 lbs., and in the L.P. cylinder 11 lbs.

$$\text{Diameter of H.P. cylinder} = \sqrt{\frac{5{,}000 \times 21{,}000}{3 \times 65 \times 5 \times 80}} = 36{\cdot}7 \text{ inches.}$$

$$\text{,, M.P. ,,} = \sqrt{\frac{5{,}000 \times 21{,}000}{3 \times 28 \times 5 \times 80}} = 55{\cdot}9 \text{ inches.}$$

$$\text{,, L.P. ,,} = \sqrt{\frac{5{,}000 \times 21{,}000}{3 \times 11 \times 5 \times 80}} = 89{\cdot}2 \text{ inches.}$$

Main Steam Pipe.—The main steam pipe, which supplies a cylinder with steam, should be of such a size that the mean velocity of flow through it does not exceed 8000 feet per minute. When this is not exceeded, the loss of pressure between the boiler and the valve-chest is very slight indeed. If, however, the valve-chest is large, and the cut-off in the cylinder is before half-stroke, the area of transverse section of this pipe may be smaller than given by the above rule, inasmuch as the piston speed is below the mean velocity at the early part of the stroke, and the space in the steam-chest acts as a reservoir for steam, so as to keep up a steady supply during admission. If the space is not less than one-half the volume swept through by the piston at cut-off, the velocity of steam in the pipe may be *assumed* to be 9,000 for engines of 150 N.H.P. to 250 N.H.P., and 10,000 for those above that power; for smaller engines, owing to the comparatively larger resistances of small pipes, it is not advisable to take a higher speed than 8,000. On the other hand, if the cut-off is later than half-

stroke, and the valve-box small, the assumed velocity should be at least 10 per cent. less than that given above.

Taking 8,100 feet as the mean velocity, S the mean speed of piston in feet per minute, and D the diameter of the cylinder, then,

$$\text{Diameter of main steam pipe} = \sqrt{\frac{D^2 \times S}{8{,}100}} = \frac{D}{90}\sqrt{S}.$$

Example.—To find the diameter of the main steam pipe to a cylinder 45 inches diameter and 60 inches stroke, the revolutions at full speed to be 60 per minute.

$$\text{Here } S = 2 \times 5 \times 60 = 600, \text{ and } D = 45 \text{ inches.}$$

Therefore,

$$\text{Diameter of main steam pipe} = \frac{45}{90}\sqrt{600} = 12{\cdot}25 \text{ inches.}$$

When the main steam pipe is abnormally long, as is the case with large ships with long boiler rooms, the steam pipe should be somewhat larger.

Area through Stop and Throttle Valves.—Although the loss of pressure at the valve-box is often attributed to want of sectional area in the main steam pipe, it is more frequently due to contracted area past these valves. The friction through a number of small openings is considerably more than through one of an area equal to the collective areas of those openings, especially if the perimeters of the latter largely exceed that of the single opening, and the "loss of head" will be large if due allowance is not made. For this reason there should always be an excess of area around valves and other obstructions to the free passage of steam, and the passages leading to and from them should be as easy as possible, so as to avoid violent changes both of direction and velocity of flow.

Steam Ports and Passages.—Since, in most engines, the steam has to exhaust through the same ports and passages by which it was admitted, their size must be governed by the proper flow of emission, rather than of admission. The area of section of steam ports should be such that the mean velocity of flow should not exceed 6000 feet per minute. The ports may be somewhat larger than the section of the passages when certain kinds of valves are used, which will be dealt with later on; but, as a rule, they have the same area as the sectional area of the passages. To avoid excessive *clearance*, the capacity of the passages should be as small as possible consistent with free flow of steam, and as this depends greatly on their sectional area, the reduction in capacity can only be attained by making them as short as possible. Not only will the evils arising from *clearance* be avoided, but the loss through resistance be very materially lessened by shortening the distance between the valve face and cylinder.

Area of steam ports and of section through passages

$$= \frac{\text{Area of piston} \times \text{speed of piston}}{6000}$$

$$= \frac{(\text{Diameter of cylinder})^2 \times \text{speed of piston}}{7636}$$

Opening of Port to Steam.—It is advisable so to design the valve, &c., that the opening for admission of steam to the cylinder is sufficient to avoid any serious loss by "wire-drawing;" but in actual practice, unless special gearing is designed so as to give a quick motion to the valve at the instant of cut-off, there is very considerable loss of pressure shown on the indicator-diagram; and, what is worse still, from deficient opening, the loss is generally not limited to the period of cut-off, but during the whole time of admission. The ordinary valve-gears do not give that quick motion, either at opening or at cut-off, which is such a desideratum. Separate expansion valves and special valve-gearings admit of such a motion, and consequently the opening to steam with them may be smaller than when cut-off is effected by the ordinary slide-valve and link-motion.

Hence, when only common valves and gear are to be used, the area of opening to steam when at its greatest should be such that the mean velocity of flow does not exceed 10,000 feet per minute. When expansion valves, or special valve gearing, is used, the mean velocity may be assumed at 12,000 feet, although it is better to give such an amount of opening, when possible, that the velocity shall not exceed 10,000 feet. In actual practice the amount of opening is often much less than that given by the above rules, but it always results in loss of pressure in the cylinder throughout, and excessive "wire-drawing" previous to cut-off.

Exhaust Passages and Pipes.—The area of section of exhaust passages should be such that the mean velocity of steam does not exceed 6000 feet per minute, and if the distance from the cylinder to the condenser is comparatively great, a somewhat larger area is advisable. There should not be a greater difference than 1 lb. between the pressure in the cylinder and that in the condenser when exhausting.

The exhaust passages from the high-pressure cylinder of a compound engine to the receiver should be such, that the flow of steam does not exceed 5,000 feet per minute, in order that the difference between the pressure during admission in the low-pressure cylinder and exhaust in the high-pressure cylinder may not be excessive. The pressure in the receiver is not sensibly constant, as it is in the condenser, being subject to sudden fluctuation when the high-pressure valve opens to exhaust and the low-pressure valve opens to *lead*.

The following table gives the relation between the various passages, &c., and the piston in accordance with the foregoing rules, and is based on the assumption of a mean velocity of flow of 8,000 feet per minute for the main steam pipe, 12,000 for opening to steam, and 6,000 for exhaust; A is the area of piston, and D is its diameter:—

TABLE IX.

Piston Speed. Feet per Minute.	Diameter Main Steam ÷ D.	Diameter Exhaust ÷ D.	Area Main Steam ÷ A.	Opening to Steam ÷ A.	Area Exhaust ÷ A.
200	0·158	0·182	0·025	0·0167	0·0333
250	0·177	0·204	0·0313	0·0208	0·0417
300	0·194	0·223	0·0375	0·0250	0·0500
350	0·209	0·241	0·0437	0·0292	0·0583
400	0·224	0·258	0·0500	0·0333	0·0667
450	0·237	0·274	0·0562	0·0375	0·0750
500	0·250	0·288	0·0625	0·0416	0·0833
550	0·262	0·302	0·0687	0·0458	0·0917
600	0·274	0·316	0·0750	0·0500	0·1000
650	0·285	0·329	0·0812	0·0541	0·1083
700	0·296	0·341	0·0875	0·0583	0·1167
750	0·306	0·353	0·0937	0·0625	0·1250
800	0·316	0·365	0·1000	0·0667	0·1333
850	0·326	0·376	0·1062	0·0708	0·1417
900	0·335	0·387	0·1125	0·0750	0·1500
950	0·344	0·397	0·1187	0·0791	0·1583
1000	0·353	0·400	0·1250	0·0833	0·1667

In naval and other ships the engines of which are only occasionally, and for short periods, run at full speed, so that high efficiency at those times is not of first consideration, the exhaust-pipe to the condenser may be of such a size that the flow is 8,000 feet in large engines and 7,000 feet in smaller ones; the exhaust-pipes from cylinder to cylinder may be correspondingly reduced, as may also the ports, &c.

Cylinder Liner.—In order that a suitable material may be supplied to resist the rubbing action of the piston without wearing away, and one that shall be capable of taking and retaining a polished surface, so as to minimise the friction of the piston, and which, when worn, may be easily and cheaply renewed, an inner bush or false barrel is fitted, usually called the *cylinder liner*. This liner should be made of a hard, close-grained metal having considerable strength, but not so hard as to resist the action of a cutting tool or file; it should also be such that the expansion caused by heat is very nearly the same as the cast iron of which the cylinder itself is made. It is usual to make these liners of cast iron, strengthened, closed, and hardened by mixing with it certain kinds of pig iron, or by the addition of a small quantity of steel (*vide* Chap. XXII.) The Admiralty prefer, for horizontal engines, the liners to be made of Whitworth's com-

pressed or other equally good steel, hammered out to the proper size for boring; and some engineers use cast steel. Although the compressed steel gives good results, it can be equalled by the specially-made cast iron, so far as good wearing is concerned, but, of course, it far exceeds cast iron in strength; this latter quality is necessary to a higher degree for the horizontal engine than for the vertical engine, so that the Admiralty are justified in going to the expense of the steel, more especially as it enables them to fit much lighter liners than would be admissible if made of cast iron. In the merchant service, with the vertical engine the cast iron liner does exceedingly well, and is not likely to be superseded by steel, even if this material can be manufactured much cheaper than at present. Liners are usually made with an inside flange at the bottom end (fig. 26), which fits into a recess in the cylinder end, and is secured there by *screw-bolts*. The upper end is turned for a few inches, so as to fit tightly into the cylinder shell at that part. The joint at the cylinder bottom is made with red lead paint, while leakage between the liner and the cylinder shell is prevented at the other end by stuffing a few rounds of gasket, rope, or Tuck's packing into a recess formed for that purpose, and preventing it from coming out by securing a flat wrought-iron ring *to the liner* so as to cover the packing. Sometimes in lieu of a stuffing-box, the outer edge of the liner and the edge of the turned part of the cylinder shell are champhered so as to form a groove; into this groove a turn of Tuck's packing or asbestos rope is pressed with a ring as before. Some engineers, preferring to rely on metallic contact, turn a slight recess instead of champhering the edge of the liner, and *caulk into it* a strip of soft copper. The liners are sometimes secured without a flange at the bottom, by screwing studs through the cylinder shell and liner, and making the ends steam-tight as before.

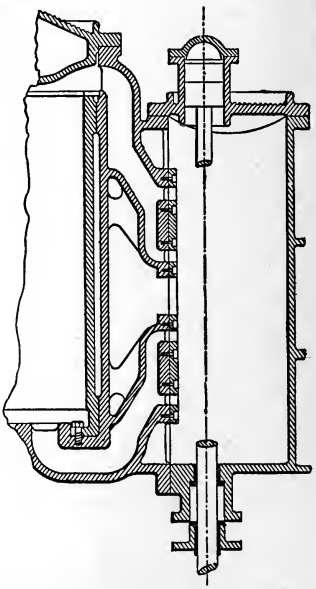

Fig. 26.—Section through cylinder.

The space between the liner and shell should not be less than 1 inch, and may be filled with steam so as to heat the steam during expansion. If the cylinder has to be jacketed, this is really a better plan of doing it than by casting the cylinder and inner cylinder together, as was very generally done formerly. Independently of the advantage derived from the harder metal of which

the liner may be made, compared with that which is suitable for so intricate a casting as a cylinder, there is another very great advantage to the manufacturer. Since it is a necessity that the walls of the cylinders be sound and free from sponginess, as well as blow-holes, a casting has often to be condemned for a defect which in no way detracts from its strength or usefulness, excepting that it does not admit of the piston working on it steam-tight. If a liner is to be fitted, a little sponginess, or even a blow-hole, is of no consequence, and therefore the extra cost of fitting a liner does not, as a rule, exceed the reasonable premium which would be allowed for assuring good and sound castings; and this is especially so in the case of large cylinders.

False Faces.—For the same reason that liners are fitted to the cylinders, the cylinder face needs a false face. This is usually made of hard, close-grained cast iron, of the same quality as the liner, and secured to the cylinder (fig. 26) by brass screws having *cheese* heads sunk in a recess, so as to be considerably below the surface. Care should be taken to lock these screws, so that they cannot slack back; the simplest way of doing this is to cut a slight nick in the side of the recess, and caulk or drift the metal of the screwhead into it, after the screw is tightened in place.

False faces were sometimes made of hard gun-metal, or phosphor-bronze, especially in the engines of war-ships. The superior strength of these metals over cast iron admits of the face being much thinner, but besides being much more expensive, there is great risk of damage to the cylinder itself, owing to the greater expansion by heat of the bronzes; and even if this danger is slight, some difficulty has been experienced in keeping the joint between the two metals steam-tight.

By connecting the recesses for the screwheads with grooves cut in the face, the rubbing surfaces are well lubricated, and a considerable amount of relief given to the valve itself by the reduction of the effective pressure on it, caused by the steam flowing through these grooves, &c.

The corners of the ports, both in the false face and cylinder face, should be well rounded, as the casting is very apt to crack if they are sharp.

The Width of the Steam Ports, in the direction parallel to the cylinder bottom, is usually 0·6 to 0·8 of the diameter, but engines of longer stroke than usual require a larger proportion than this to obtain the necessary port area without having excessive length (measured in direction parallel to the axis). It is obvious that, at the cylinder bore, the width of port cannot exceed the diameter, and must really be somewhat less; in actual practice it seldom exceeds 0·8 of the diameter; but at the cylinder face it may, and sometimes does, exceed the diameter, the length being such that the area of section of the passage is uniform throughout.

Piston Valves.—If the very broad cylinder face is bent into the form of a cylinder, there will be the same area of orifice, while the

space occupied in direction of the width of the port is less than one-third of that required for the flat face. The valve for such a face must be cylindrical, or composed of two circular discs or pistons having the same depth of edge as there would be of bearing surface at each end of the ordinary slide-valve. Such a valve (fig. in Ch. xiii.) is called a *piston-valve*, and besides possessing the advantage of occupying little space, has the more valuable one of being free from lateral pressure, requiring no balancing or relief, and moving with the least resistance of any slide-valve. For these reasons, the piston-valve is an exceedingly good form when high pressures of steam are used and for very large engines. It is a very general thing among some engineers to fit a piston-valve to the high-pressure cylinder of compound engines of all sizes, and nearly all engineers fit a piston-valve to the H.P. cylinder of triple compound engines of all sizes; many makers also fit the M.P. cylinder with piston-valves, and a few fit them to all three cylinders, especially of large engines.

Double-Ported Valves.—Although there is of necessity only one opening of the steam passage into the cylinder, there may be two or more openings *through the cylinder face* into the steam passage. The combined area of these openings need not materially exceed that of the section of the passage, and usually only equals it; but as each will be open to steam by the same amount as the single port, if the valve has the same travel, lap, &c., the total opening is in this case double that of the single port for a double-ported face, and treble for a treble-ported face. When the face is treble-ported, the valve is generally arranged so as to admit steam through all three ports, but to exhaust through two only, as there is seldom any difficulty in getting full opening to exhaust.

Steam Jackets.—It is not necessary here to enter into the question of the economy of steam-jacketing. If the economy is doubted, it is, at least, certain that it admits of the cylinders being gently warmed before starting, without moving the working parts. It was customary at one time to form a jacket around the cylinder by *casting it* with two thicknesses of metal; but this was often inconvenient, and always risky to the moulder. Now, when a jacket is desired, a loose liner is fitted. When the engines are of short stroke, the ends present almost as large a surface to the steam as do the walls, and should be jacketed if the jacketing is to be effective. For strength of structure, too, all large cylinders should have hollow bottoms and covers, as merely stiffening them with webs is not sufficient, and is in some cases even a source of danger. If the pressure is on the same side as the webs, they are safe and do add to the strength of structure; if on the opposite side, then they are in tension, and their outer edge liable to extreme tension; so that if their be a nick or other such defect from which to start a crack, or if subject to a sudden application of the strain, the outer edge is apt to crack, which will develop and spread into the main body of metal, finally causing serious damage. This arises from the fact of cast iron possessing so low a power of resisting a

strain in tension, compared with its power against compression. Care should be taken to thoroughly drain the steam jackets, and to this end no webs should so be placed as to stop the flow of water to the drain-cocks. The steam supplied to the jackets of the low-pressure cylinder should not much exceed in pressure that in the receiver; for this purpose, a reducing valve is fitted between the boiler supply pipes and the jacket.

Boring Holes.—The diameter of the boring hole depends generally on the size of the boring bar employed, and should not be less than one-fifth the diameter of the cylinder. When there is a single piston-rod, the stuffing-box is formed in the cover of the boring hole. When there are two or more piston-rods, the boring hole should be large enough to admit a man; and, therefore, not less than 14 inches diameter, and, when possible, 16 inches diameter. The doors are sometimes made with the flange fitting into a recess *inside* the cylinder, so that the piston-rod may be drawn from the cylinder with the piston; when this is required, the boring hole must be of sufficient diameter to admit of the piston-rod end drawing through it.

Auxiliary Valves.—To render engines handy—whose main valves cut off at a somewhat early period of the stroke, and compound engines having only one cylinder, into which steam is admitted direct from the boiler—so that they may be started from any position of the cranks, it is necessary to arrange the gear so that the valves may be worked by hand, or else to fit smaller valves, which may be readily worked by the engineer; these are called auxiliary valves, and should have a port area equal to 0·002 the area of the piston. It is only usual to fit such valves to the low-pressure cylinder of compound engines having a cut-off not earlier than half-stroke; when the cut-off is earlier than this, they are fitted to both cylinders, and are usually of the same size—viz., the port area 0·002 the area of low-pressure piston. A careful engineer having an auxiliary valve to the high-pressure cylinder need never use that on the low-pressure cylinder.

Three-crank triple compound engines are often fitted with an auxiliary slide valve to the L.P. cylinder, but it is not necessary; pass cocks or valves to admit steam to the M.P. and L.P. valve-boxes are quite sufficient to ensure handiness.

These valves are usually only flat plates, without even an exhaust cavity; but for large engines they should be piston valves, or other form of balanced valve.

Escape or Relief Valves —These are simply spring-loaded safety valves, to allow of the escape of water caused by priming or condensation when the piston presses it to one of the cylinder. They are fitted to each end of the H.P. cylinders of all marine engines of 30 N.H.P. and upwards. It is sufficient in vertical engines if there is only an escape valve at the bottom of the M.P. and L.P. cylinders. The diameter of these valves should be one-fifteenth the diameter of the cylinder (the low-pressure of a compound engine being taken). In the Navy it is usual, with horizontal engines, for all large cylinders to have a pair of escape valves at each end.

Drain-Cocks.—These should be placed wherever any water is likely to accumulate in the cylinder and casings, and should be 0·4 the diameter of the escape valves. They should be connected to a pipe leading into the condenser; for if led to the bilge the engine-

room is filled with steam when open, and the receiver and low-pressure cylinder will seldom drain—in fact, during the greater part of the stroke, instead of letting water out, they let air into the low-pressure cylinder and spoil the vacuum.

Receiver Space.—The space between the valve of the H.P. cylinder and that of the M.P. cylinder, and that between the valves of the M.P. and the L.P. cylinders, should be from 1 to 1·5 times the capacity of the exhausting cylinder, when the cranks are set at an angle of from 120° to 90°. When the cranks are opposite or nearly so, this space may be very much reduced. The pressure in the M.P. receiver should never exceed 0·7 the boiler pressure, and is generally much lower than this. It is usual to fit a safety valve to the L.P. receiver, loaded by weight or spring to a pressure of 20 to 30 lbs. per square inch; otherwise, owing to the large flat sides between the two cylinders, great risk of explosion would be run. This safety valve is usually of the same size and design as the cylinder escape valves. The receivers of three-crank engines need not be very large, as the cranks are usually at angles of 120°; in the case of triple compound engines with the M.P. leading the H.P., a very small receiver will do.

Column Facings and Feet.—It was very usual at one time to form only facings for the jointing of the cylinder to the frames and columns; but as this necessitated the use of studs, or else driven bolts with the heads inside the cylinders, it is now very generally abandoned, distinct projections or feet being cast to the cylinder bottom, having flanges corresponding to those on the columns or frames, so that they may be connected by driven bolts, which are always accessible. The only objections to this method are, that it is more expensive to mould, and a certain amount of risk is run of getting the casting sound and strong where the feet meet the main casting. The former should be disregarded in considering so important a part as the cylinder, and the latter is always avoided by a good moulder.

Great care should be exercised in designing these column feet, for through them the whole force of the steam on the cover (which is equal to that on the piston) is transmitted; and as the strain is always applied suddenly, very ample section of metal should be provided to sustain it. The area of section through these feet should be such that the strain does not exceed 600 lbs. per square inch. The webs from the flanges of the feet should be well spread over the cylinder bottom and towards the sides, so as to distribute the strain.

Holding-down Bolts.—The bolts connecting the cylinder to the columns or frames should be such that the strain on them does not exceed 4000 lbs. per square inch, taking the section at the bottom of the thread, and when there is a large number of comparatively small size it should not exceed 3000 lbs. per square inch.

Whenever possible both cylinder feet and holding-down bolts should be larger than given by the above rules by 20 per cent.

Horizontal Cylinders.—In addition to the facings or feet for connecting to frames, additional feet are necessary for the cylinders of horizontal engines to rest on, and be secured to the engine bed. These feet, too, should have webs so arranged as to distribute the strain caused by the reaction from the weight of the cylinder, pistons, &c. The front part of the cylinder should be rigidly bolted down, while the back end, especially of long cylinders, should be *held down* only, and be free to move horizontally when expanded by the heat. But since cast iron will expand only one-tenth of an inch in 8 feet, by an increase of 180° Fahr. of temperature, there is seldom need to make any special provision, beyond boring the holes for the bolts rather larger, or making them slightly oval in the cylinder feet.

Diagonal Cylinders.—The feet of the cylinders of a diagonal engine often serve the double purpose of supporting their weight, and transmitting the strains to the framing; for this purpose they should be as nearly as possible in a plane passing through the axis of the cylinder, and exceptionally long, with good webs, well extended. They should fit into recesses in the framing, and well keyed against strong fillets at either end, so as to take the shearing strain from the holding-down bolts. If the valve-boxes are on the top sides of the cylinders, either in the diagonal or horizontal engine, care should be taken to form, by means of webs or other device, arches springing from the feet to support their weight, and so avoid distortion of the cylinder bore.

Oscillating Cylinders.—The chief peculiarity of these cylinders is the method of supporting by trunnions, which also serve as steam and exhaust-pipes (*vide* fig. 5.) Half the strain on the piston is taken on each trunnion, and since they are of such ample diameter, it is sufficient to assume that the metal is subject only to shearing stresses, and therefore the area of section should be such that the strain does not exceed 500 lbs. per square inch. The diameter of the trunnions is governed by the size of the exhaust-pipe, since the steam must exhaust through one of them, and it is usual and convenient to make them all of the same size. In the case of a compound oscillating engine, the trunnions of both cylinders should be of the same size, which will depend on the size of exhaust of the low-pressure cylinder. The trunnions of the high-pressure cylinder, being so much larger than is necessary to accommodate the steam-pipe, allows of a space between its outer or working part and the inner part or stuffing-box, which, if left open to the air, is well ventilated, and so prevents the bearing from becoming heated by the steam of high temperature.

The *length* of the trunnion journal or bearing should be such that the pressure per square inch on the area, made by the multiple of its diameter and length, does not exceed 350 lbs.; generally it is from one-third to one-half of the diameter.

The trunnions have interposed between them and the cylinder body a belt, which conveys the steam to and from the valve-boxes.

This belt should be very strong and well ribbed to the body of the cylinder, immediately above and below the trunnions, and when the cylinder is fitted with a liner, it is better to form the outer shell in the shape of a beer barrel, so that the belt projects inside, and not outside, as it would be were there no liner; the strain from the trunnions is then at once taken by the cylinder sides without the intervention of webs or ribs.

The cylinder faces of oscillating engines should be so set that the edge next the steam entrance should be the nearest point to the cylinder—that is, the plane of the cylinder face touches a cylinder whose axis coincides with the axis of the cylinder-bore at this edge. When this is so, the lead of the steamway into the valve-box is short and easy, and the opening into the exhaust-belt on the side opposite is large, without causing the valve-spindle centre to be unnecessarily far out from the cylinder.

Cylinder Covers.—Like the cylinder end or bottom, the cover has to be strong enough to take the full steam pressure, but as a rule it has no strain to distribute to any other part. The same remarks as to webs, &c., equally apply to the covers, and all above 24 inches diameter of high-pressure cylinders, and 40 inches diameter for low-pressure cylinders, should be made hollow with two thicknesses of metal. Those of vertical engines are better made in that way for all sizes, inasmuch as it is necessary to fill in the spaces between the webs, when they are so made, to prevent the lodgment of water, &c., and it is usual to add a false cover, either polished or cast with a pattern to give a good appearance. This can always be accomplished by casting the covers hollow. The depth of the cylinder cover at the middle should be about one-quarter of the diameter of the piston for pressures of 80 lbs. and upwards, and that of the low-pressure cylinder cover of a compound engine equal to that of the high-pressure cylinder. Since, however, the size of the piston-rod is the best measure of the pressure on the cover, it is better to so design the cover that its depth at the middle is not less than 1·3 times the diameter of the piston-rod. The depth of the cover at the edge depends on the steam port; a recess being formed for the steam way, and the inside of the cover otherwise being parallel to the piston.

The cylinder covers in the Navy are now steel-castings, varying from $\frac{3}{4}$ inch to $1\frac{1}{4}$ inch thick, and sometimes cast without webs, the necessary stiffness being obtained by their form, which is often a series of corrugations.

It is the custom with some engineers to end the cylinder a little beyond the extreme travel of the piston, the steam port-opening being then in the same plane with the cylinder flange; the cover has a large recess in it, and its flange so extended as to enclose the port-opening (fig. 27, p. 159). The advantage of this method is the decreased length and weight of cylinder, and the being able to secure the cover in way of the steam port direct to the main casting, instead of to the comparatively weak bridge of metal across the

port. On the other hand, however, the cover occupies considerably more room, and not being of circular form at the flange cannot be turned there. For large engines this plan is a very good one, and may be adopted with advantage, but for such ones and those of moderate size it is not so convenient as the older one.

Cylinder Cover Studs and Bolts should be made of the best steel, and of such a size that the strain on them does not exceed 5000 lbs. per square inch of section at the bottom of the thread, as they are subject to severe and sudden shocks when *priming* occurs, and to considerable wear and tear from the frequent removals of the covers for examination of the pistons. In large engines it is usual to fit the cylinder covers with manholes for purposes of examination, as for such large engines larger studs may be fitted, a higher strain is permissible if desired, so that the section may be such that with the maximum pressure there is a strain of 6000 lbs. per square inch. From one or two causes the resistance to pressure on the cover may not be evenly distributed over the whole of the studs, so that a good nominal margin of safety should be allowed in such a very important part; this is especially so when a large number of small studs are fitted; in this case, when of less diameter than $\frac{7}{8}$ inch, the allowance should not exceed 4500 lbs. per square inch. If iron is used, the strain should be 20 per cent. less.

Cylinder Flanges.—The width of the cylinder flange need not exceed three times the diameter of the bolts or studs, but if the former are fitted this allowance is not sufficient. Studs are now nearly always fitted to marine cylinders in great measure for this reason.

Clearance of Piston.—If both cylinder end, piston, and cover were accurately turned, and the brasses did not wear, a very small amount of space would suffice for clearance between the piston and cylinder end; but as it is usual to leave these parts as they come from the foundry, and the bearings, however well made, do wear in course of time, it is necessary to make due allowance for this. Small engines up to 30 N.H.P. require an allowance of $\frac{1}{8}$ inch at each end for roughness of castings, and $\frac{1}{16}$ inch for each working joint, that is, for any part between the piston and the shaft journals where wear can take place; engines from 30 N.H.P. to 80 N.H.P., $\frac{3}{16}$ inch and $\frac{3}{32}$ inch for each working part; engines from 80 N.H.P. to 150 N.H.P., $\frac{1}{4}$ inch and $\frac{3}{32}$ inch for each working part; engines of 150 N.H.P. and upwards, $\frac{3}{8}$ inch and $\frac{1}{8}$ inch for each working part. Naval and other very fast running engines should have a larger allowance.

For example, take the case of a vertical direct-acting engine of 100 N.H.P.; the parts which wear so as to bring the piston nearer to the bottom are three—viz., the shaft journals, crank-pin brasses, and piston-rod gudgeon brasses, so that the clearance at *top* will be $\frac{3}{8}$ inch, and the clearance at *bottom* $\frac{3}{8}$ inch $+ 3 \times \frac{1}{8}$, or $\frac{3}{4}$ inch in all. Here the total clearance in the cylinder is $1\frac{1}{8}$ inch. In a return connecting-rod horizontal engine the same *amount* of clearance is necessary,

but the larger allowance at the back or cover end. In a horizontal trunk engine the wear on the shaft journals tends to neutralise that on the connecting-rod ends, so that, if the wear is equal on all of the brasses, an allowance at the front end for one bearing only would be sufficient; but as the shaft journals wear much less than do the others an allowance for two joints should be made, so that in this case there should be $\frac{3}{8}$ inch at the back or cover end, and $\frac{5}{8}$ inch at the front.

Valve-Box Covers.—The covers are usually formed of a flat plate stiffened by ribs or webs. So long as the stiffening webs are on the same side as the pressure this form is satisfactory, especially when the covers are not very large; but when they are large and inconvenient to web them on that side they should be made hollow, with the back rounded like a hog-back girder. These covers in Naval ships are now very generally made of cast steel.

The studs and bolts with which these doors are secured, should be arranged in accordance with the rules laid down for those of cylinder covers.

Small Doors and Covers.—As it is essential to examine from time to time the internal working parts, and as this examination is more for the sake of seeing that everything is in good order, rather than in the expectation of having to execute repairs, and generally there is little time at the disposal of the engineer for these purposes, small doors should be fitted to the large heavy doors, secured with only a few studs, so as to be quickly taken off and refitted. These may for this reason, with advantage, be of cast steel or of steel plate pressed to shape. There should be, when possible, a doorway in the bottom and cover of the low-pressure cylinder, and to the valve casing of the low-pressure cylinder, large enough to admit a man. To the valve boxes of both cylinders there should be peep-holes, through which to ascertain the leads and cut-off of the valves, and to press the valves to the cylinder faces should they have become blown off.

Lagging and Clothing of Cylinders.—All hot surfaces, from which loss of heat may occur by radiation, should be covered with a non-conducting substance. Felt was usually employed and well suited for this purpose, being enclosed in polished teak or mahogany lagging, secured with brass bands wherever in view in the engine-room, and by pine lagging or canvas when not in view. Sheet-iron is sometimes used as being more enduring than wood, but unless very carefully fitted and well painted does not look so well as wood.

Cement and silicate cotton are often specified for by some engineers for the cylinder covering, but they are both very objectionable, on the ground that the dust coming through the lagging from them, owing to the vibration, &c., is very apt to get into the bearings and guides, and cause serious trouble. Asbestos fibre may, however, be used with advantage, especially on the H.P. cylinder of triple engines.

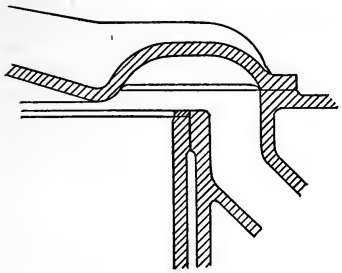

Fig. 27.—Shortened Cylinder with Port in Cover.

The following rules are for the scantlings of the cylinder and its connections:—

D is the diameter of the cylinder in inches.
p, the load on the safety-valves in lbs. per square inch.
p_1, the absolute pressure of steam in the boiler.
f, a constant multiplier = thickness of barrel + ·25 inch.

Thickness of metal of cylinder barrel or liner, not to be less than $p \times D \div 3{,}000$ when of cast iron.*

$$\text{Thickness of cylinder barrel} = \frac{D}{6{,}000}(p + 50) + 0{\cdot}2.$$

$$\text{,, liner} = 0{\cdot}8 \times f.$$

For purposes of calculation p may be taken as follows:—

H.P.	cylinder	p =	boiler pressure.
M.P.	,, triple	p = 0·6 ×	boiler pressure.
M.P.	,, quadruple	p = 0·7 ×	,,
$M.P._2$	,, ,,	p = 0·45 ×	,,
L.P.	,, ,,	p = 0·25 ×	,,
L.P.	,, triple	p = 0·25 ×	,,

Thickness of liner when of steel		= 0·65 × f.	
,,	metal of steam ports	= 0·6 × f.	
,,	,, valve-box sides	= 0·65 × f.	
,,	,, ,, covers	= 0·7 × f.	
,,	,, cylinder bottom	= 1·1 × f,	if single thickness.
,,	,, ,, ,,	= 0·65 × f,	if double ,,
,,	,, ,, covers	= 1·0 × f,	if single ,,
,,	,, ,, ,,	= 0·6 × f,	if double ,,
,,	cylinder flange	= 1·4 × f.	
,,	,, cover flange	= 1·3 × f.	
,,	,, valve-box ,,	= 1·0 × f.	
,,	,, door ,,	= 0·9 × f.	
,,	,, face over ports	= 1·2 × f.	
,,	,, ,, ,,	= 1·0 × f,	when there is a false face.
,,	,, false face	= 0·8 × f,	when cast iron.
,,	,, ,, ,,	= 0·6 × f,	when steel or bronze.

* When made of exceedingly good material, at least twice melted, the thickness may be 0·8 of that given by the above rules.

For torpedo boats, catchers, and other such ships where extreme lightness is a necessity, and full power is only developed at intervals and for a short time, the scantling may be reduced by 25 per cent.

Pitch of Studs or bolts in cylinder-cover or valve-box door in inches should not exceed $\sqrt{\frac{t \times 100}{p}}$, t being the thickness of the cover or door flange in sixteenths of an inch, p, the pressure per square inch in pounds on it.

Flat Surfaces.—All flat surfaces of cast iron should be stiffened by webs, or stays of some form, whose pitch should not exceed $\sqrt{\frac{t^2 \times 50}{p}}$. These webs should be of the same thickness as the flat surface, and their depth at least 2·5 times the thickness.

The Cylinder Body or Barrel should be stiffened by external flanges or webs, at about 12 times the thickness of metal apart; these webs should be $1{\cdot}5 \times f$ thick, and stand at least $0{\cdot}75 \times f$ beyond the surface of the cylinder. Some engineers, however, prefer to do without these stiffening webs, and make the cylinder somewhat thicker instead.

Stuffing-Boxes and Glands.—For obvious reasons, it is useless giving any definite rules for the sizes of these, as they will differ

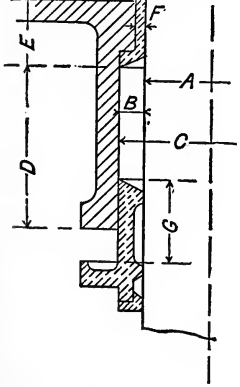

Fig. 28.

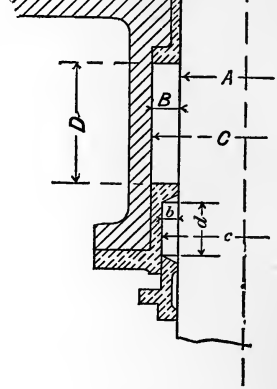

Fig. 29.

STUFFING-BOXES, &c.

TABLE X.—Stuffing-Boxes for Elastic Packing (Fig. 28).

A	B	C	D_1 50 lbs.	D_2 100 lbs.	D_3 150 lbs.	E	F	
Diameter of Rod.	Width of Packing Space.	Diameter of Box. 1·25 × A + ·55.	Depth of Packing. ·9 × A + ·75.	Depth of Packing. 1·15 × A + ·75.	Depth of Packing. 1·4 × A + ·75.	Overall Depth of Neck-Ring. ·45 A + ·35.	Thickness of Bushes, Gland, and Neck. ·045 × A + ·18.	Number and Diameter of Studs.
Ins.	Ins.	Ins.	Ins.	Ins.	Ins.	Ins.	In.	Ins.
$\frac{3}{4}$	$\frac{3}{8}$	$1\frac{1}{2}$	$1\frac{3}{8}$	$1\frac{5}{8}$	$1\frac{3}{4}$	$\frac{3}{4}$	$\frac{3}{16}$	2 to $\frac{3}{8}$
$\frac{7}{8}$	$\frac{3}{8}$	$1\frac{5}{8}$	$1\frac{1}{2}$	$1\frac{3}{4}$	2	$\frac{7}{8}$	$\frac{3}{16}$	2 ,, $\frac{3}{8}$
1	$\frac{7}{16}$	$1\frac{7}{8}$	$1\frac{5}{8}$	2	$2\frac{1}{4}$	1	$\frac{1}{4}$	2 ,, $\frac{1}{2}$
$1\frac{1}{8}$	$\frac{7}{16}$	2	$1\frac{3}{4}$	$2\frac{1}{8}$	$2\frac{3}{8}$	$1\frac{1}{8}$	$\frac{1}{4}$	2 ,, $\frac{1}{2}$
$1\frac{1}{4}$	$\frac{7}{16}$	$2\frac{1}{8}$	$1\frac{7}{8}$	$2\frac{1}{4}$	$2\frac{1}{2}$	$1\frac{1}{4}$	$\frac{1}{4}$	2 ,, $\frac{5}{8}$
$1\frac{3}{8}$	$\frac{7}{16}$	$2\frac{1}{4}$	2	$2\frac{3}{8}$	$2\frac{5}{8}$	1	$\frac{1}{4}$	2 ,, $\frac{5}{8}$
$1\frac{1}{2}$	$\frac{1}{2}$	$2\frac{1}{2}$	$2\frac{1}{8}$	$2\frac{1}{2}$	$2\frac{7}{8}$	1	$\frac{1}{4}$	2 ,, $\frac{3}{4}$
$1\frac{3}{4}$	$\frac{1}{2}$	$2\frac{3}{4}$	$2\frac{1}{4}$	$2\frac{3}{4}$	$3\frac{1}{4}$	$1\frac{1}{8}$	$\frac{1}{4}$	2 ,, $\frac{3}{4}$
2	$\frac{9}{16}$	$3\frac{1}{8}$	$2\frac{1}{2}$	$3\frac{1}{8}$	$3\frac{1}{2}$	$1\frac{1}{4}$	$\frac{1}{4}$	2 ,, $\frac{7}{8}$
$2\frac{1}{4}$	$\frac{9}{16}$	$3\frac{3}{8}$	$2\frac{3}{4}$	$3\frac{1}{2}$	$3\frac{7}{8}$	$1\frac{3}{8}$	$\frac{6}{16}$	2 ,, $\frac{7}{8}$
$2\frac{1}{2}$	$\frac{5}{8}$	$3\frac{3}{4}$	3	$3\frac{3}{4}$	$4\frac{1}{4}$	$1\frac{1}{2}$	$\frac{5}{16}$	2 ,, $\frac{7}{8}$ / 3 ,, $\frac{3}{4}$
$2\frac{3}{4}$	$\frac{5}{8}$	4	$3\frac{1}{4}$	4	$4\frac{5}{8}$	$1\frac{5}{8}$	$\frac{5}{16}$	2 ,, 1 / 3 ,, $\frac{3}{4}$
3	$\frac{11}{16}$	$4\frac{3}{8}$	$3\frac{1}{2}$	$4\frac{1}{4}$	5	$1\frac{3}{4}$	$\frac{5}{16}$	2 ,, 1 / 3 ,, $\frac{7}{8}$
$3\frac{1}{4}$	$\frac{11}{16}$	$4\frac{5}{8}$	$3\frac{3}{4}$	$4\frac{3}{4}$	$5\frac{3}{8}$	$1\frac{7}{8}$	$\frac{3}{8}$	2 ,, $1\frac{1}{8}$ / 3 ,, $\frac{7}{8}$
$3\frac{1}{2}$	$\frac{3}{4}$	5	4	5	$5\frac{5}{8}$	2	$\frac{3}{8}$	2 ,, $1\frac{1}{8}$ / 3 ,, 1
$3\frac{3}{4}$	$\frac{3}{4}$	$5\frac{1}{4}$	$4\frac{1}{4}$	$5\frac{1}{4}$	6	$2\frac{1}{8}$	$\frac{3}{8}$	2 ,, $1\frac{1}{4}$ / 3 ,, 1
4	$\frac{13}{16}$	$5\frac{5}{8}$	$4\frac{1}{2}$	$5\frac{1}{2}$	$6\frac{3}{8}$	$2\frac{1}{8}$	$\frac{3}{8}$	2 ,, $1\frac{1}{4}$ / 3 ,, 1
$4\frac{1}{2}$	$\frac{7}{8}$	$6\frac{1}{4}$	$4\frac{3}{4}$	6	7	$2\frac{3}{4}$	$\frac{7}{16}$	2 ,, $1\frac{3}{8}$ / 3 ,, $1\frac{1}{8}$
5	$\frac{15}{16}$	$6\frac{7}{8}$	5	$6\frac{1}{2}$	$7\frac{3}{4}$	$2\frac{5}{8}$	$\frac{7}{16}$	2 ,, $1\frac{3}{8}$ / 3 ,, $1\frac{1}{8}$
$5\frac{1}{2}$	1	$7\frac{1}{2}$	$5\frac{5}{8}$	7	$8\frac{1}{2}$	$2\frac{7}{8}$	$\frac{7}{16}$	4 ,, $1\frac{1}{8}$
6	$1\frac{1}{8}$	$8\frac{1}{4}$	$6\frac{1}{4}$	$7\frac{5}{8}$	$9\frac{1}{4}$	3	$\frac{7}{16}$	4 ,, $1\frac{1}{8}$
$6\frac{1}{2}$	$1\frac{1}{8}$	$8\frac{3}{4}$	$6\frac{5}{8}$	$8\frac{1}{8}$	$9\frac{7}{8}$	$3\frac{1}{4}$	$\frac{1}{2}$	4 ,, $1\frac{1}{8}$
7	$1\frac{1}{4}$	$9\frac{1}{2}$	7	$8\frac{3}{4}$	$10\frac{1}{2}$	$3\frac{1}{2}$	$\frac{1}{2}$	4 ,, $1\frac{1}{4}$
$7\frac{1}{2}$	$1\frac{1}{4}$	10	$7\frac{1}{2}$	$9\frac{3}{8}$	$11\frac{1}{4}$	$3\frac{3}{4}$	$\frac{1}{2}$	4 ,, $1\frac{1}{4}$
8	$1\frac{3}{8}$	$10\frac{3}{4}$	8	10	12	4	$\frac{9}{16}$	4 ,, $1\frac{1}{4}$
$8\frac{1}{2}$	$1\frac{3}{8}$	$11\frac{1}{4}$	$8\frac{1}{2}$	$10\frac{1}{2}$	$12\frac{3}{4}$	$4\frac{1}{4}$	$\frac{9}{16}$	4 ,, $1\frac{3}{8}$
9	$1\frac{1}{2}$	12	$8\frac{1}{2}$	11	$13\frac{3}{8}$	$4\frac{3}{8}$	$\frac{9}{16}$	4 ,, $1\frac{3}{8}$
$9\frac{1}{2}$	$1\frac{1}{2}$	$12\frac{1}{2}$	$9\frac{3}{8}$	$11\frac{5}{8}$	$14\frac{1}{8}$	$4\frac{5}{8}$	$\frac{5}{8}$	4 ,, $1\frac{3}{8}$
10	$1\frac{1}{2}$	13	$9\frac{3}{4}$	$12\frac{1}{4}$	$14\frac{3}{4}$	$4\frac{5}{8}$	$\frac{5}{8}$	4 ,, $1\frac{3}{8}$

from different circumstance, and many of the parts do not vary when others are varied. The foreging Table of sizes (p. 161) gives such as are found in good practice, and will be of more use than any abstract rules.

In the case of the cylinder, it is usual to make the stuffing-boxes, for uniformity's sake, for the low-pressure and medium-pressure piston-rods of the same depth as that of the high-pressure rod. The stuffing-boxes of the valve-spindles, too, are usually exceptionally deep, on account of their liability to leak, and the trouble of packing them. The packing of the stuffing-boxes in the cylinder-covers of vertical engines is very liable to give trouble with steam of high-pressure from the want of moisture; the lubricant affects only the top layers of packing, and keeps them soft, while the bottom ones get hard and charred. Metallic packings are the best for use with steam of high-pressure, and although some patent vegetable packings work very well, no doubt these latter will all in time be superseded by the former. The metallic packings so far have been only partially successful; they are generally arranged in a series of hoops of triangular section, the pressure on the rod being caused either by a second set of hoops outside the first, causing a wedging action on the gland being pressed home, or else by an arragement of springs or spring clips. The newer and better forms are now giving great satisfaction and taking the place of vegetable and asbestos in the high-pressure cylinder, and used by many engineers for the medium-pressure cylinder also.

CHAPTER VIII.

THE PISTON—PISTON-ROD—CONNECTING-ROD.

The Piston is essentially only a disc, strong enough structurally to withstand the pressure of the steam on it, and fitting steam-tight in the cylinder. The piston in this simple form is seen in the Richard's Indicator, and is often so fitted to small engines.

In the early days of steam-engine construction, when there existed no machine capable of boring out a cylinder, the bore was not perfectly true, nor the sides very smooth, and, consequently, unless some form of elastic packing was interposed between the piston and the cylinder sides, it could not work steam-tight. It was customary to form the piston with a recess on the rim, into which rope or *junk* was coiled, just as is now the custom to do with air-pumps. This packing could not be examined or renewed without drawing the piston from the cylinder, a tedious operation at all times; to remedy this the recess was made without a flange at the top or side of the piston next the cylinder cover, and a false flange or loose ring was bolted to the piston so as to retain the junk packing in place, and admit of its being removed or added to without removing the piston from the cylinder. This ring was called the "junk-ring," and retains that name although junk is no longer used to pack pistons. After a few weeks' work the cylinder was rubbed smooth and fairly true, when the piston would work steam-tight with very little friction, and with steam of low pressure and temperature the packing lasted a considerable time.

A solid piston, that is, one without packing, is really the best for good working, so long as it remains steam-tight; but as there is always some slight amount of wear, especially when the cylinder is fresh from the boring mill, and leakage past the piston is most serious, especially when the engine is standing still, it is necessary to have some means of adjustment, whereby the piston is maintained a steam-tight fit in the cylinder.

In lieu of the vegetable packing, which is not admissible with steam of high pressure, engineers now fit metallic rings, called "packing rings," in various forms, which are pressed outwards against the side of the cylinder by springs. These rings are maintained in position steam-tight by the junk-ring as of old.

When these metallic rings are once in place so as to fit closely to the cylinder sides, there is no need of further lateral pressure until by wear the piston becomes slack, and steam permitted to pass it. However, nearly all existing pistons are automatic in this respect, and the consequence is that the packing rings press so tightly on the cylinder sides, that the loss by friction seriously impairs the efficiency of the engine; and it is only when the ring or cylinder is considerably rubbed away, that the piston works with ease. From these causes many really good pistons have been condemned after *having been made* to cause serious damage.

Perhaps the first remove from the primitive piston is to be found in the form usually fitted in locomotives, and generally known as *Ramsbottom's.*

Ramsbottom's Rings (fig. 30).—Mr. Ramsbottom, of the L. & N.W. R. Co., was the first to pack pistons by one or more narrow metal rings, turned somewhat larger in external diameter than that of the cylinder bore, and which, after being cut across so as to be capable of being compressed to suit the bore of the cylinder, are fitted into recesses turned in the piston edge. The rings fit accurately into these recesses, and as they are so placed that no two of the joints are in a line, the piston is practically steam-tight, and works very well in locomotives and other quick working engines of small size; but for large engines, and engines undergoing the same vicissitudes as those on shipboard, there is an objection to this form of piston. It will be seen that the rings cannot be removed without drawing the piston, and that there is no means of preventing steam from passing where the spring is cut across, besides which the rubbing surface is very small, and the spring is always exerting its maximum effort. The first of these objections is overcome (fig. 31) by fitting a junk-ring, having cast with it a spigot or ring, which goes down into the recess around the piston for the packing ring, and made steam-tight; into grooves turned in the outer surface of this spigot the Ramsbottom rings are fitted.

For small engines these rings are made of steel; for such engines as may be standing unused for many days, some engineers prefer to fit hard brass rings. When for larger engines where the section may be three-quarters of an inch square and upwards, the rings are better of tough and hard cast iron, which works very well indeed.

Common Piston Rings (fig. 33) consist only of a single hoop made of very tough, close-grained, cast iron, made on the same principle as the Ramsbottom rings, but fitted between the piston flange and the junk-ring, so as to be free to move laterally steam-tight. This packing ring is usually turned to a diameter about 1 per cent. in excess of that of the cylinder, and either cut across diagonally, or formed so that one end has a tongue fitting into a recess in the other (fig. 32), a brass cover-piece being fitted behind the gap, so as to prevent steam leaking into the space

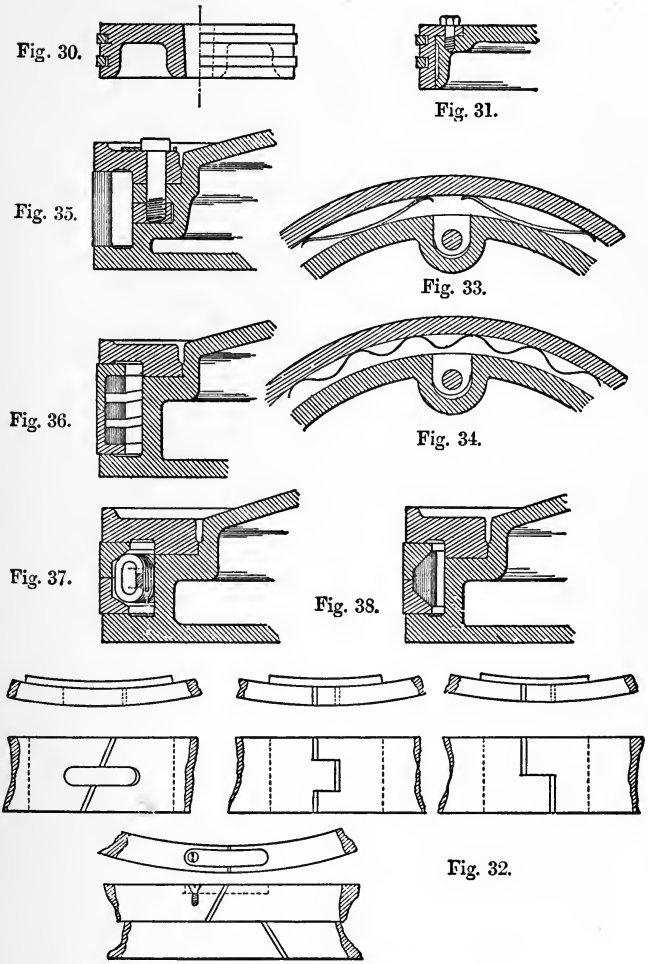

Figs. 30 to 38.—Various Forms of Piston.

behind the rings. The ring is then fitted to the piston flange steam-tight by scraping both surfaces; the ring is raised by interposing very thin pieces of paper between it and the flange, and the junk-ring is then fitted steam-tight to the piston and packing ring by scraping, &c. Some makers of pistons profess to turn the piston and rings so accurately as to require no scraping, but it is doubtful if there is economy in the practice if carried to the perfection professed; other engineers prefer to grind the rings tight after coming from the lathe. In whatever way the object is attained is of small moment compared with the necessity of having the ring *perfectly* steam-tight between the flange and junk-ring.

Piston Springs.—When the piston is of comparatively small diameter, the elasticity of the packing ring itself is sufficient to keep it steam-tight against the cylinder sides for a very considerable time after it is fitted; and even larger rings may be made of sufficient strength to do this, but they would then be open to the same objection as raised against the Ramsbottom rings. The old method of pressing the ring out by means of dished springs or coach-springs, as shown in fig. 33, is now seldom used in new engines; the objections to it are the uneven and unknown pressure exerted, and the reaction of the piston itself, from the fact of the springs pressing on it. It was a very difficult thing to so set every spring that the pressure on the ring was uniform; and the range of action of this form of spring is very limited, so that although the ring might be very tight when first fitted, after a few days running it would be passing steam. The surface exposed to pressure too was small, and the springs were apt to bed themselves into the ring, and in doing so wear through their curved ends. These defects were partially remedied by adding to each one or more subsidiary springs on the principle of coach-springs, but that only tended to aggravate the other evil spoken of—viz., the reaction of the piston itself.

When a piston is moving through its course, and guided therein by the rod at one end and the tail rod (or back guides in case of a horizontal engine) at the other, it should be quite free laterally from the packing ring, which may follow its course freely. When the bore of the cylinder is quite true, and its axis coincides with the line of motion of the piston centre, it is of no consequence if the springs do bear on the piston; but if the cylinder wears somewhat out of truth in either direction, it is important that the spring-ring shall follow the sides of the cylinder freely; it cannot do this if the springs react from the piston body.

Cameron's Patent.—Fig. 34 shows a piston-ring pressed out with a corrugated ribbon of steel; the lateral pressure here is obtained by the resistance of the spring to being bent into a circle, and by the pressure exerted by the corrugations when the ends of the spring are pressed apart. This spring exerts an almost uniform lateral pressure on the packing ring without touching the body of the piston, and by making the packing ring comparatively thin, it

will adapt itself to the shape of the cylinder when worn. The pressure on the ring can also be easily and nicely adjusted by packing pieces between the ends of the spring. One great advantage of this spring is that it can be fitted to any piston without condemning any of the parts beyond the springs.

Mather and Platt's Patent.—It was found that metallic packing rings not only wore sideways, but also on the edges, so as to become slack between the flange and junk-ring; a very slight amount of play between these soon causes a very large degree of slackness from the continual concussion on change of motion at every stroke. To obviate this the ring was formed with inside flanges, as shown in fig. 36, and split into two, a spiral hoop, having three or four turns, being coiled inside the rings, whose action is to press the packing rings outward against the cylinder sides, and up and down against the flange and junk-ring. This form has been generally very successful, and pistons so fitted have worked very well indeed; but there is the objection that no adjustment of the spring is possible, and it is always exerting its maximum effort. The chief part of the elasticity of this spring, however, is exerted in pressing the rings against the flange and junk-ring, and the friction so caused helps to prevent undue pressure on the cylinder side, so that in practice it is not found that there is excessive side pressure when first fitted, nor lack of it when the cylinder is worn. These springs are made of steel, or very strong cast iron, cut out of a ring of either metal. They are also sometimes cast to the form required.

Buckley's Patent consists of two rings, of section as shown in fig. 37; a spiral coil of steel wire is bent into a circle, and inserted between the two packing-rings. Pressure is exerted in the same way as in Cameron's spring, and tends to press the packing rings both outwards and against the flange and junk-ring. This form of piston is very generally used at the present time, and when properly adjusted works very well. The spring, however, is a very stiff one, and requires but little end pressure to exert a very considerable pressure on the sides of the cylinder.

Prior's Patent.—The rings in this plan are precisely like those of Buckley's piston, but the spring is made of bar steel bent zigzag, so as to form a belt and exert pressure both outwards and sideways in the same way that Buckley's does.

Qualter and Hall's Patent.—This piston has two packing rings of triangular section, with a third ring inside and between them, as shown in fig. 38, so that on this inner ring being pressed outwards, it exerts a wedge action on the two packing rings so as to force them against the flange and junk-ring. Coach-springs are employed to press the ring outwards, which are each held in a brass frame having a tapered piece on the back, which fits into a recess in the piston and against a tapered cotter; this cotter can be pressed down by a set screw in the junk-ring, and any required pressure is imparted to the ring through the spring in this way.

This piston has therefore the advantage of being capable of adjustment without removing the junk-ring, and the adjustment can be made to a nicety with very little trouble, and also, in case of the engines not being required for some weeks, the pressure on the springs may be relieved until required again. This piston has given very great satisfaction.

Rowan's Patent, and MacLaine's Patent, consists of two strong rings of square section, or of U section, pressed outwards by springs at the cross cut, and against the flange and junk-ring by wave springs fitted in a groove between them. This arrangement has been found to work well.

Body of the Piston.—Pistons of small size are usually made of a single thickness of metal without, of course, any stiffening webs or ribs. Pistons of very considerable size (88 inches diameter) have been made of cast steel in one thickness without stiffening ribs; they are in the form of a cone, to suit the cylinder end, and by that means have the requisite degree of stiffness; they were made in this form to save weight, being for fast-running horizontal engines, and are now used exclusively in naval engines of all kinds. The pistons for torpedo boats and other very fast running machinery are usually made of forged steel, and are very thin at the flange and near it.

Pistons of ordinary marine engines above 12 inches diameter for a high-pressure, and 24 inches diameter for a low-pressure cylinder, are usually made cellular—that is, with two thicknesses of metal

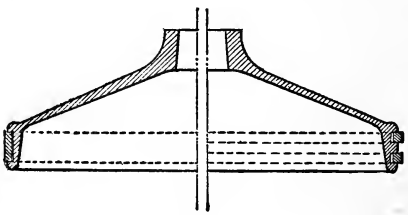

Fig. 39.—Forged-Steel Piston.

stiffened or connected by ribs and webs, and either by the thickness of metal or by the depth of body made strong enough structurally to safely withstand, not only the steam pressure exerted on it and transmitted to the rod, but also the shocks to which it is liable when priming occurs.

The piston body must be so designed, too, that it may be safely cast, for in the early days of large pistons it was not at all an uncommon thing for a piston to break in cooling, or mysteriously afterwards. For this reason any rules must of necessity be empirical which set out the thickness of metal of the different parts of the body; but care must always be exercised that no one part is too small for the strains to which it is subject. For example, there must be sufficient metal in the immediate neigh-

bourhood of the piston-rod boss to resist the tendency to force out this part by shearing the metal. Again, the piston may be taken as consisting of a number of sectors, and by considering one

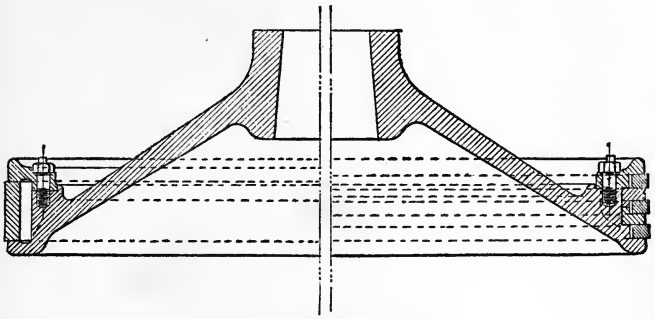

Fig. 40.—Cast-Steel Piston.

of such small sectors loaded with the pressure on its area at the centre of gravity of its figure, the bending moment at any section may be found, and the thickness of metal tried whether it be sufficient for the purpose.

For the section of an ordinary piston having a single rod, the following table gives the multipliers for obtaining the thickness of metal and sizes of the different parts.

Details of Construction of the Ordinary Piston.—Let D be the diameter of the piston in inches, p the effective pressure per square inch on it, x a constant multiplier, found as follows :—

$$x = \frac{D}{50} \times \sqrt{p} + 1.$$

For H.P. cylinders p may be taken at half the boiler pressure, for M.P. cylinders a quarter the boiler pressure, and for low-pressure cylinder half the boiler pressure, divided by ratio of L.P. to H.P. cylinders.

Cast-Iron Pistons.

The thickness of front of piston near the boss	= 0·2	× x.
„ „ „ „ rim	= 0·17	× x.
„ back „ . . .	= 0·18	× x.
„ boss around the rod .	= 0·3	× x.
„ flange inside packing ring .	= 0.23	× x.
„ „ at edge . . .	= 0·25	× x.
„ packing ring . . .	= 0·15	× x.
„ junk-ring at edge . .	= 0·23	× x.
„ „ inside packing ring	= 0·21	× x.
„ „ at bolt holes. .	= 0·35	× x.
„ metal around piston edge .	= 0·25	× x.

CAST-IRON PISTONS—*continued.*

The breadth of packing ring . . .	$= 0{\cdot}63 \times x.$
„ depth of piston at centre . .	$= 1{\cdot}4 \times x.$
„ lap of junk-ring on the piston .	$= 0{\cdot}45 \times x.$
„ space between piston body and packing ring	$= 0{\cdot}3 \times x.$
„ diameter of junk-ring bolts . .	$= 0{\cdot}1 \times x + 0{\cdot}25$ in.
„ pitch „ „ „ . .	= 10 diameters.
„ number of webs in the piston .	$= \frac{D + 20}{12}$.
„ thickness „ „ .	$= 0{\cdot}18 \times x.$

CAST-STEEL PISTONS.

Thickness near boss	$= 0{\cdot}26 \times x.$
„ „ rim	$= 0{\cdot}15 \times x.$

FORGED-STEEL PISTONS.

Thickness near boss	$= 0{\cdot}2 \times x.$
„ „ rim	$= 0{\cdot}1 \times x.$

When made of exceptionally good metal, at least twice melted, the thicknesses of cast-iron pistons may be as much as 20 per cent. less than given by the rules; but, on the other hand, if made of other than really good metal they should be thicker. The piston should be made of good metal always, and for fast-running engines it is better made of steel. The packing ring is sometimes made much thicker in the part opposite the cut than given above, in order to have sufficient elasticity of itself to press steam-tight against the cylinder; but it is better to let the springs perform their function wholly, and leave the ring to act only as the packing.

Junk-ring Bolts.—When screw-bolts are used to hold the junk-ring in place, they are either screwed into a brass nut let into a recess in the side of the piston, or else screwed into a brass plug, which has been screwed tightly into the piston. The former plan is most general, and has the advantage that if the bolt thread is torn away the nut can be easily replaced, and owing to the length of body the bolts cannot slack themselves back. Many engineers, however, prefer to screw the bolts directly into the cast iron, making the tapped hole as deep as possible; and although it may be supposed the bolts would set fast by rust, practice has shown that such does not take place, nor do the cast-iron threads wear quickly away.

Studs are often used instead of screw-bolts, but although, to some extent, possessing advantages over the latter, they are not so convenient, and have all to be withdrawn when any refitting of the packing and junk-rings is necessary.

Safety-rings and Lock Bolts.—The vibration of the junk-ring has

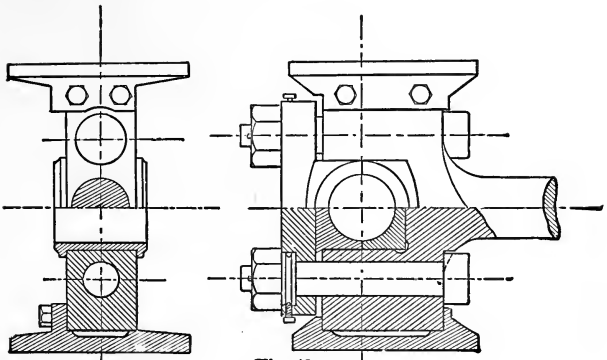

Fig. 41.

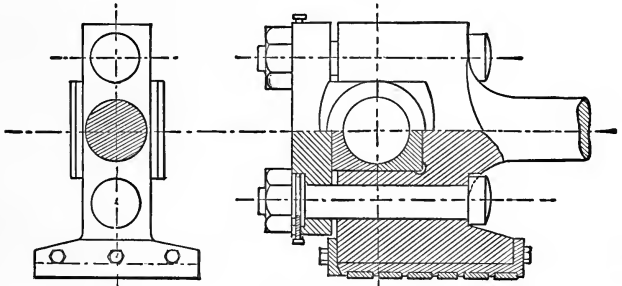

Fig. 42.

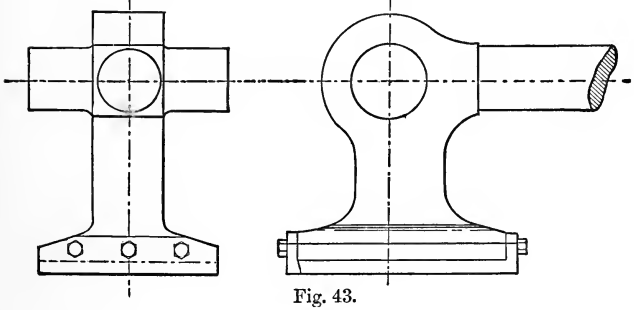

Fig. 43.

Piston-Rod Ends and Guide Blocks, &c.

a tendency to slack back the bolts, and although it is a rare occurrence to find such a thing happen in a vertical engine, very serious accidents have frequently been caused by the junk-ring bolts getting loose in a horizontal cylinder. To prevent such a casualty the piston bolts of all horizontal engines should have a light wrought-iron ring secured to the junk-ring by studs, having square bodies and nuts secured with split-pins; this ring fits close to the heads of the bolts, and prevents them then from turning. When studs are used their bodies should be square or with a projecting side, the holes in the junk-ring corresponding in size and form to them, so that when on it prevents them from unscrewing; the nuts may be prevented from slacking by a ring, or each stud may have a split-pin through its end.

There are some other methods, but none of them are either so efficient or so inexpensive as the above.

Solid Packings.—In order that the weight of the piston of a horizontal engine may be taken by the broad packing ring, instead of by the comparatively narrow flange and junk-ring, it is customary and advisable to fit a cast-iron packing between the body of the piston and the packing ring for about one-third of the circumference in lieu of springs. The pistons of diagonal and oscillating cylinders are also better if fitted in this way.

Piston-rod.—It is usual to have only one rod to each piston of a direct-acting engine, but some manufacturers, to suit a particular style of crosshead and connecting-rod, fit two. The single rod is preferable from practical considerations, even for large engines, because it requires very considerable care on the part of the workman to bore the two holes in the piston, cylinder bottom, and crosshead so *exactly* that the rods will fit into their place without adjustment; the friction of the two stuffing-boxes will be very considerably more than that of the one larger one; the cost of labour will also be nearly double that for the single rod, and there are two stuffing-boxes, which require packing, and two glands demanding attention, instead of one.

Return connecting-rod and steeple engines of necessity require two rods to each piston, and Messrs. Humphreys fitted four rods in the case of the very large pistons of H.M.S. "Monarch," the better to distribute the strain over the piston face, and to admit of a better form of crosshead.

Diameter of Piston-rod.—Since the piston-rod is secured in the piston, and usually well guided at the other end, so that it could not bend without meeting with considerable resistance, it may be treated as a *strut* or column, secured at both ends; but when the outer end fits into a crosshead, which would offer little or no resistance to bending, then the rod must be treated as a column loose at one end and secured at the other.

From Mr. Hodgkinson's experiments and Mr. L. Gordon's investigations, the following are the formulæ for computing the strength of columns:—

(1.) For a column fixed at both ends, $$P = \frac{f.S}{1 + a\frac{l^2}{d^2}}.$$

(2.) For a column loose at both ends, $$P = \frac{f.S}{1 + 4a\frac{l^2}{d^2}}.$$

(3.) For a column fixed at one end only, $$P = \frac{2f.S}{2 + 5a\frac{l^2}{d^2}}.$$

P is the load, l the length of the column in inches, d the diameter in inches, a for solid wrought iron and mild steel $\frac{1}{3000}$, and f 36,000 lbs. per square inch, S being the area of section of the rod in square inches. Taking this value of f in the above formulæ, P is the breaking load; since it is usual to have a factor of safety for all important parts of a marine engine, of at least 6, the value of f should not exceed 6000 lbs., and may be taken generally at 5000 lbs.; but as the piston-rod is liable to great shock, and always receives its load suddenly, 3000 lbs. should be taken as the value of f to calculate the diameter. These formulæ are too complicated for general use, but the size of a piston-rod may be *checked* by them easily after having been calculated by an empirical formula.

Since, however, an approximate value may be safely taken for the relation between l and d of ordinary marine engines, the formulæ may be reduced to a very simple form. Hence, since

$$P = \frac{\pi D^2}{4} \times p: \quad \text{and } f S = \frac{\pi d^2}{4} \times f.$$

D being the diameter of the piston, and p the effective pressure on it in pounds per square inch.

$$p \,.\, D^2 = f d^2 \div 1 + a\frac{l^2}{d^2}$$

Let

$$\frac{l}{d} \text{ be represented by } r,$$

Then

$$d = D \sqrt{\frac{p}{f}(1 + a r^2)}$$

taking $f = 3025$.

Diameter of piston-rod

$$= \frac{D}{55} \sqrt{p\,(1 + a r^2)} \quad . \quad . \quad . \quad (1).$$

The following are the values of r;—

Short stroke direct-acting engines,	boiler pressure	30 lbs,	$r =$	7 to 8
Long	„	„	„	30	„	$r =$ 8 to 10
Short	„	„	„	80	„	$r =$ 6 to 7
Long	„	„	„	80	„	$r =$ 7 to 8
Very long	„	„	„	80	„	$r =$ 10 to 12
Oscillating engines of short stroke,			„	30	„	$r =$ 10 to 15
„	„	long	„	„	30	„	$r =$ 15 to 18
„	„	medium	„	and compound	70	„	$r =$ 10 to 12
Return connecting-rod engines,	boiler pressure			30	„	$r =$ 22 to 28
„	„	„		70	„	$r =$ 18 to 23

The following rules, however, will give results sufficiently accurate for all practical purposes.

$$\text{Diameter of piston-rod} = \frac{\text{Diameter of Cylinder}}{\text{F}} \sqrt{p}.$$

The following are the values of F:—

Naval engines,	direct-acting,	F = 60
„	short stroke,	F = 70
„	return connecting-rod, 2 rods,	F = 80
Mercantile ordinary stroke,	direct-acting,	F = 50
„	long „ „	F = 48
„	very long „ „	F = 45
„	medium stroke, oscillating,	F = 45

NOTE.—*Long and very long*, as compared with the stroke usual for the power of engine or size of cylinder.

In considering an expansive engine p, the effective pressure, should be taken as the *absolute* working pressure, or 15 lbs. above that to which the boiler safety valve is loaded; for a compound engine the value of p for the high-pressure piston should be taken as the absolute pressure, less 15 lbs., or the same as the load on the safety valve; for the medium-pressure the load may be taken as that due to half the absolute boiler pressure; and for the low-pressure cylinder the boiler pressure divided by the ratio of L.P. to H.P. cylinder. For several obvious reasons it is an advantage to make all the rods of compound engines alike, and this is now the rule.

Piston-Rod Ends.—It is absolutely necessary that the rod should fit *perfectly* steam-tight into the piston, and also be so tight as not to "draw" in the least when subject to shock. If the rod end were made cylindrical or "parallel," as it is technically called, and fitted in to satisfy the above conditions, it would be very tedious and difficult to get it out again. For this reason principally it is usual to turn the part fitting into the piston "taper" or conical. If the taper is very slight the rod can be easily made a tight fit, but unless formed with a shoulder at the end of the taper, it would in time become so tightly held by the piston as to withstand all attempts at withdrawal, and also there would be at all times a great danger of splitting the piston by the wedging action. If the

taper extends the whole depth of the piston, it should be at the rate of $\frac{3}{4}$ inch to the foot; that is, the diameter of the rod at back is less than that at the front by one-sixteenth of the length of taper. Even with so liberal an allowance as this, there is great difficulty often experienced in withdrawing the rod after a few months' work; for this reason some engineers do not extend the taper the full depth of the piston. The most convenient, and at the same time reliable, practice is to turn the piston-rod end with a shoulder of $\frac{1}{16}$ inch for small engines, and $\frac{1}{8}$ inch for large ones, make the taper 3 inches to the foot (fig. 44) until the section of the rod is three-fourths of that of the body, then turn the remaining part parallel; the rod should then fit into the piston so as to leave $\frac{1}{8}$ inch between it and the shoulder for large pistons, and $\frac{1}{16}$ inch

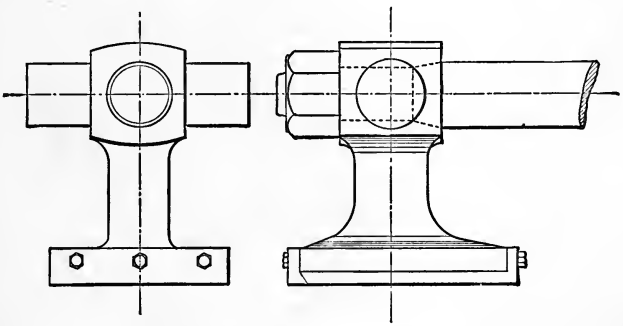

Fig. 44.—Piston-Rod Crosshead.

when small. The shoulder prevents the rod from splitting the piston, and allows of the rod being turned true after long wear without encroaching on the taper.

It was usual to prolong the piston-rods of vertical engines so as to admit of the "tail" end passing through a stuffing-box in the cylinder-cover, and so help to guide the piston, and prevent its unduly wearing the cylinder. Since no moisture can get to the packing of this stuffing-box, and the lubricant applied externally soon gets carried through to the cylinder, some trouble is experienced in keeping it steam-tight; the rolling of the ship also causes the piston to exert pressure sideways on the gland and packing, and further aggravates the evil. For these reasons it is preferable to simply fit a brass bush in the cover for the "tail" end to work in, and cover it with a dome or sheath fitted steam-tight and true on the cover, making a couple of grooves in the side of the bush to admit and release the steam. But, on the whole, it is very doubtful if these tail-rods are so efficacious as represented, and they cannot be so beneficial to the good working of the cylinder as a piston with broad bearing-surfaces. When the packing ring

is pressed out by springs acting independently of the body of the piston, it is advisable to form the piston with greater depth of flange and junk-ring.

The piston is secured to the rod by a nut, and the size of the rod should be such that the strain on the section at the bottom of the thread does not exceed 5500 lbs. per square inch for iron, and 7000 lbs. for steel. The depth of this nut need not exceed the diameter which would be found by allowing these strains. To avoid the large cavity which is necessary in the cylinder-cover for the piston-rod nut, many engine builders recess it into the piston; this recess does not materially affect the strength of the piston, and the plan may be followed with advantage. Although piston-rod nuts seldom work loose, and those of vertical engines are less liable to this than are others, still as a measure of safety in all cases a taper split-pin should be fitted to the rod behind the nut, and in the case of large horizontal engines it is usual to fit a "lock" plate to the nut itself, or to adopt some other means of preventing it from moving at all when at work.

Back-Rods and Trunks.—Horizontal direct-acting engines had tail-ends to the piston-rods with slipper guides, working on a bracket secured to the cover, and stayed by rods so as to give a rigid bed to the slide. Return connecting-rod engines had usually a central back-rod secured by its flange to the piston, and, passing through a stuffing-box in the cylinder-cover, guided in the same way as above described. These rods were usually made of cast iron, and of much larger diameter than the piston-rods themselves, so that they aided very materially in supporting the piston. The use of light steel pistons has obviated the necessity for these back-rods, and they are now never fitted.

Trunk Engines.—These engines, which have been described in Chap. I, have pistons with the trunks through which the connecting-rod passes, cast in one with them; the back-trunk, which serves as a means of getting at the gudgeon, as well as a guide or support to the piston, is bolted to the piston by a flange fitting into a recess, in the same way as the back-rod of the return connecting-rod engine. The crosshead or "gudgeon," as it is usually called, to which the connecting-rod is attached, is secured to two strong lugs well bracketed to the piston and front trunk by two bolts on either side, its ends being flattened and extended to take these bolts. These engines are arranged to turn so that the reaction or thrust of the connecting-rods is upward when going "ahead;" in this way the weight of the piston helps to balance the upward thrust, which otherwise would have a very prejudicial effect on the cylinder.

The thickness of the trunks at the junction with the piston at about the same as the thickness of the piston at that point, and this at the mouth about 0·7 of that at the root.

The diameter of the trunk depends on the length of stroke and diameter of connecting-rod at its middle; roughly

Diameter of trunk = 0·75 × length of stroke.

Piston-Rod Guides.—The pressure on the piston is transmitted through the piston-rod to the connecting-rod, and the reaction of the latter rod acts in the direction of its length; consequently, when the connecting-rod is not in line with the piston-rod, the force of its reaction can be divided into two component forces, one in the direction of the piston-rod, and the other perpendicular to it. This latter force is usually called the "thrust of the connecting-rod," and unless specially prevented, would tend to bend the piston-rod. To prevent such an occurrence, and to preserve the piston-rod in its true course, a guide is provided, and the piston-rod end fitted with blocks or slippers to work in it. This thrust varies from O at the end of the stroke to its maximum point, which is towards the point when the crank is at a right angle to the centre line through the cylinder, and depending on the cut-off point; when steam is cut off past half-stroke, then this is exactly the point of maximum thrust. To determine the magnitude of the thrust when P is the total effective load on the piston, S the stroke, and L the length of connecting-rod, represented by A B, fig. 45:

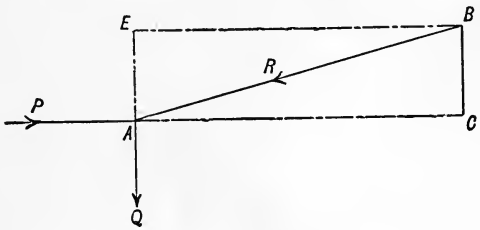

Fig. 45.

completing the parallelogram by the dotted lines A E, B E, A C, then the reaction, R, of the connecting rod, represented in direction and magnitude by A B, will be resolved into the two forces, P and Q, represented by the lines E B, A E, both in direction and magnitude. P must equal the load on the piston, and Q, the thrust on the guides, may be obtained by measuring B C on a graphically constructed diagram, or by geometry calculated as follows:—

$$AC^2 = AB^2 - BC^2 = L^2 - \left(\frac{S}{2}\right)^2$$

Now,

$$P : Q :: AC : BC.$$

Therefore,

$$Q = P \times \frac{BC}{AC} = P \times \frac{\frac{S}{2}}{\sqrt{L^2 - \left(\frac{S}{2}\right)^2}} = P \times \frac{S}{\sqrt{4L^2 - S^2}}$$

Or, by Trigonometry,

$$Q = R \text{ sine } BAC,$$

$$P = R \text{ cosine } BAC, \text{ or } R = \frac{P}{\text{cosine } BAC} = P \text{ secant } BAC.$$

Therefore,

$$Q = P \frac{\text{sine } BAC}{\cos BAC} = P \tan BAC.$$

The angle B A C is found by knowing its sine to be half the stroke ÷ length of connecting-rod.

Example.—To find the thrust taken on the piston-rod guide of an engine whose piston load is 100,000 lbs.; the length of stroke is 60 inches, and the connecting-rod is 120 inches long.

$$\text{Thrust} = 100{,}000 \times \frac{60}{\sqrt{4 \times (120)^2 - 60^2}} = 23{,}238 \text{ lbs.}$$

Surface of Guide-block.—The area of the guide-block, or slipper-surface on which the thrust is taken, should in no case be less than will admit of a pressure of 400 lbs. on the square inch; and for good working those surfaces which take the thrust when going *ahead* should be sufficiently large to prevent the maximum pressure per square inch exceeding 100 lbs. per square inch. When the surfaces are kept well lubricated this allowance may be exceeded, but the reduction in surface should be effected by making shallow grooves and recesses in the face of the slipper, in which the lubricant can lodge and impart itself to the guide as it is carried along. A good method of carrying this into effect is to provide a surface calculated on the allowance of 100 lbs. per square inch, and by cross-planing so as to leave shallow recesses about $\frac{1}{16}$ inch deep, reduce the actual surface which touches the guide to about $\frac{5}{8}$ of the original area; there will be then strips across the slipper $1\frac{1}{4}$ inches wide, with depressions between them $\frac{3}{4}$ inch wide, filled with grease.*

Cast iron, hard and close grained, is the best material for the guide-plates; its surface, after a few hours work, becomes exceedingly hard and highly polished, and offers very little resistance to the slipper or guide-block. So long as this hard skin remains intact, no trouble will be experienced, but if abrasion takes place from heating or other cause, it rarely works well after, and should be at once planed afresh.

The slippers or facing plates fitted to the piston-rod or crosshead

* When the engines are to be run at a piston speed exceeding 600 feet per minute, the maximum pressure per square inch should be reduced, so that with speed of 1,000 feet per minute it is not more than 60 lbs.

are sometimes made of brass; but brass seldom gets that smooth hard skin so essential to good and efficient working, and when once the surface is grooved and scratched, it will wear away very rapidly. Cast iron is, after all, the best metal for this purpose, if care is taken at the first working of the engine to run for a few hours at easy speed, so as to rub down and polish the surfaces; after this is once thoroughly done, cast-iron surfaces will continue to work well with very slight attention. White metal is often used for the facing of slippers, and works very well, and for high speed is essential for good and safe working. The best way of using white metal for this purpose is to fit strips of this material into grooves planed across a cast-iron slipper, and leave them standing from $\frac{1}{16}$ to $\frac{1}{8}$ inch above the cast iron. The strips should be above 2 inches wide, and the space between them about $1\frac{1}{4}$ inches, into which the lubricant can lodge, as before described. A slipper fitted in this way is shown in fig. 42. It is usual to cut oil-ways in the face of the guide, which distribute the oil across it, and metal combs secured to the slipper dip into the oil receiver at the end of the guide, and smear the face on the return stroke.

The guide-plates are sometimes planed across, instead of the slippers, for the same purpose of retaining the lubricant.

Piston-Rod Crossheads and Gudgeons.—When there are two piston-rods, as in the case of the return connecting-rod engine, they are united to a common crosshead, having a turned journal in the middle for the connecting-rod to work on; or else a bearing is fitted to the crosshead, in which a gudgeon on the connecting-rod works. The former (fig. 46) is the better and usual plan under ordinary circumstances. This crosshead is of wrought iron or steel, and made of

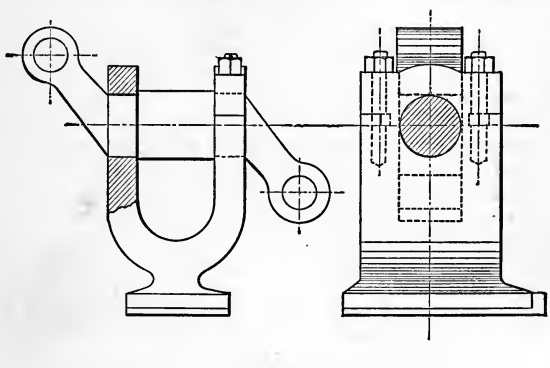

Fig. 46.—Crosshead and Guide-Block.

a form suitable to the circumstances, and arranged to work in guides. The diameter at the middle must, of course, be sufficient to withstand the bending action, and generally from this cause ample

surface is provided for good working; but in any case the area, calculated by multiplying the diameter of the journal by its length, should be such that the pressure does not exceed 1200 lbs. per square inch, taking the maximum *load on the piston* as the total pressure on it.

Let L be the distance of the centres of the piston rods in inches, and P the maximum load on the piston in pounds, then for strength

$$\text{Diameter of crosshead should not be less than } \frac{\sqrt[3]{P \times L}}{18}.$$

For good wearing, l being the length of the journal,

$$\text{Diameter of crosshead should not be less than } \frac{P}{1200 \times l}.$$

Of course, the maximum load on the crosshead is really the reaction of the connecting-rod, but, to avoid any complication of the calculation, it is sufficient to take the load on the piston.

When the diameter of the crosshead journal is calculated by the first rule, the length is usually made equal to it.

Direct-acting engines have usually a gudgeon secured to the connecting-rod (fig. 47), which works in a bearing in the piston-rod end; but larger engines have the gudgeon shrunk into the piston-rod end (fig. 43), and connecting-rod (fig. 48) swung on it by brasses, &c., on either side. The advantage of the latter plan is the larger bearing surfaces obtainable, and the brasses being on the outside of the rods are much easier watched and adjusted; on the other hand, there are two sets of bolts, brasses, &c., to lubricate and keep in order, and there is the liability from carelessness to put the whole of the load on one side only. In the main, however, this plan is a preferable one for large and heavy rods, and it is one which admits of the piston-rod being fitted into its end (fig. 44) instead of forged with it. This latter advantage is one well worthy of consideration, for it is highly important that the piston-rod shall be quite free from flaws and reeds on its surface, otherwise the packing gets soon damaged, and it is found then impossible to keep the glands from leaking. A forged iron rod is seldom quite free from such blemishes, while a steel one is, but the latter cannot be easily and cheaply forged with shoes, &c., on it; hence if the rod simply fits into the crosshead or rod end, this latter may with advantage be made of cast steel, while the rod is of forged mild steel.

Smaller engines are better with the gudgeon shrunk into the jaws of the connecting-rod, and working in brasses fitted into a recess in the piston-rod end (fig 41), and secured by a wrought-iron cap and two bolts.

The diameter of the gudgeon = 1·25 × diameter of piston rod.
„ length „ „ = 1·4 × „ „
The area obtained by multiplying these is exactly double the area of the piston-rod section, and so if the maximum strain per

Fig. 47.

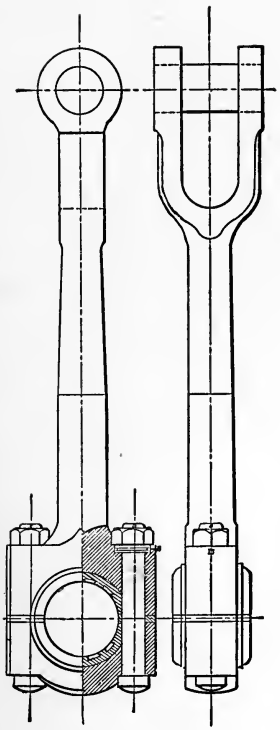

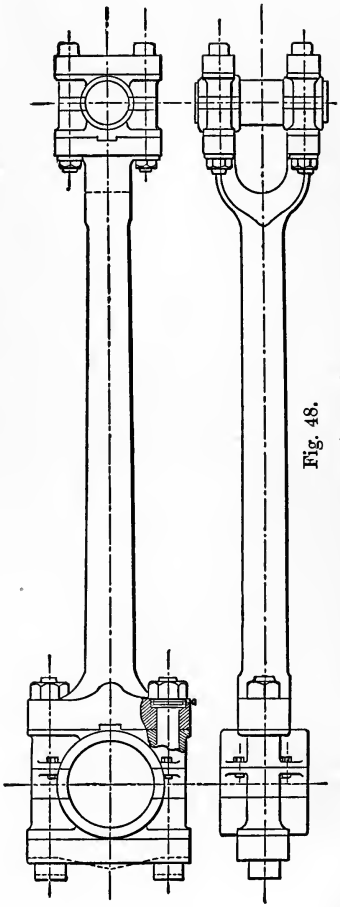

Fig. 48.
Connecting-Rods.

square inch on the rod does not exceed 2400 lbs., the above rule holds good; if this allowance of strain is exceeded in calculating the rod, then the *length* of the gudgeon should be increased until the pressure on the section, as calculated by multiplying length by diameter, does not exceed 1200 lbs. per square inch.

When the gudgeon is fixed in the piston-rod (fig. 43), the length *of each* end should be not less than 0·75 the diameter of the piston-rod.

The brasses when fitted into the piston-rod should be square-bottomed and of hard gun-metal, with good oil-ways, as owing to the motion being through a comparatively small angle only, the lubricant is not so easily spread. White metal *does not* work well on gudgeons and crossheads; it has a tendency to abrade, and to *wear the journal* oval. This is observed whenever white metal is used on a bearing subject only to a small angular motion, and is somewhat peculiar.

Gudgeons should be made of hard steel, or wrought iron case-hardened; great care is required, if of the latter, that they are carefully ground true after hardening.

The bolts securing the brasses should be of the best wrought iron, or mild steel; the latter material is so carefully manufactured now that it can be safely used; they should be of such a size that the strain per square inch of section *at the bottom of the thread* does not exceed 5000 lbs. when of iron, and 6500 when of steel. It is true that where extreme lightness of machinery is a *sine quâ non*, these strains have been exceeded by some engineers; but even under these circumstances it is unwise to exceed them by more than 10 per cent., as the saving of weight effected is exceedingly small, especially when compared with the risk run.

When the bolts are less than 2 inches in diameter, owing to the uncertainty of the depth of thread, &c., the allowance should be 10 per cent. less than the above.

Diameter of piston-rod bolts at the bottom of thread

$$= D \sqrt{\frac{p}{f}}$$

D is the diameter of piston, p, the effective pressure on it per square inch.

When there are two bolts of iron $f = 10{,}000$ lbs.
" " " steel $f = 13{,}000$ lbs.
" four " iron $f = 18{,}000$ lbs.
" " " steel $f = 24{,}500$ lbs.

The cap is of the same width as the piston-rod end—viz., 1·15 × diameter of the rod, and its thickness equal to the diameter of the bolts at *the bottom of the thread.*

Connecting-Rods.—The length of the connecting-rod measured from the centre of the gudgeon to the centre of the crank-pin

should, if possible, not be less than twice the stroke. Those of the horizontal direct-acting engines of war-ships can seldom be so long as this, and were generally one and three-quarter times the stroke; those of return connecting-rod engines are never less than twice the stroke, and sometimes as much as two and a half times; those of trunk engines two and a half to three times the stroke.

A connecting-rod may be viewed as a strut loose at both ends, the formula for which, as given on page 173, is $R = \frac{f S}{1 + 4\ a\ \frac{l^2}{d^2}}$

The value of R will be found by multiplying the load on the piston by the secant of the angle of obliquity of the connecting-rod (*vide* page 177). Or by geometry

$$R = P \times \frac{2\ L}{\sqrt{4\ L^2 - S^2}}$$

P being the load on the piston, S the stroke, and L the length of the connecting-rod as before.

Simplifying the above formula by assuming a value r for the ratio of l to d, and substituting $\frac{\pi\ d^2}{4}$ for S; and taking the value of f at 3000 lbs.

$$\text{Diameter of connecting-rod in the middle} = \frac{\sqrt{R\ (1 + 4\ a\ r^2)}}{48{\cdot}5}.$$

Example.—To find the diameter at the middle of the connecting-rod of an engine, 60 inches stroke, whose length is 120 inches, and the load on the piston 100,000 lbs., r being taken at 15.

$$R = \frac{100{,}000 \times 2 \times 120}{\sqrt{4 \times 120^2 - 60^2}} = 103{,}358 \text{ lbs.}$$

$$\text{Diameter at middle} = \frac{\sqrt{103{,}358\ \left(1 + \frac{4 \times 15^2}{3000}\right)}}{48{\cdot}5} = 7{\cdot}6 \text{ inches.}$$

The following are the values of r in practice.

Naval engines	—Direct-acting	.	$r = 9$ to 11.
,, ,,	Return connecting-rod		$r = 10$ to 13, old.
,, ,,	,, ,,		$r = 8$ to 9, modern.
,, ,,	Trunk . . .		$r = 11{\cdot}5$ to 13.
Mercantile ,,	—Direct-acting, ordinary		$r = 12$.
,, ,,	,, long stroke		$r = 13$ to 16.

Taking 10 as the average value of r for naval engines, and 13 for mercantile, then,

For a naval engine,

$$\text{Diameter of connecting-rod at middle} = \sqrt{\frac{R}{2000}}.$$

For mercantile engines,

$$\text{Diameter of connecting-rod at middle} = \sqrt{\frac{R}{1900}}.$$

The sizes given by these rules, although large enough for strength, are somewhat smaller than found in actual practice in the mercantile marine generally.

The following empirical formula will be found a very useful one, and the results given by it agree very closely with good modern practice.

$$\text{Diameter of connecting-rod at middle} = \frac{\sqrt{L \times K}}{4}.$$

L is the length of the rod in inches, and—

$$K = 0{\cdot}03 \times \sqrt{\text{Effective load on the piston in lbs.}}$$

Example. — To find the diameter of the connecting-rod, 100 inches long, for an engine having a load of 55,000 lbs.

$$K = 0{\cdot}03 \times \sqrt{55{,}000} = 7{\cdot}0,$$

$$\text{Diameter} = \frac{\sqrt{100 \times 7}}{4} = 6{\cdot}6 \text{ inches.}$$

The diameter of the connecting-rod at the ends may be 0·875 of its diameter in the middle. The tapering of rods, or making them barrel-shaped, is usual in the case of those having single brasses at both ends, such as are generally fitted to trunk and return connecting-rod engines; then the diameter of the crank-pin end is 0·925 of the diameter at middle. Direct-acting engines have usually the connecting-rods tapering from the gudgeon end to the middle, and then parallel or nearly so to the crank-pin end.

Connecting-Rod Bolts. — The diameter of the bolts may be calculated by allowing the same strain per square inch as that given for piston-rod bolts. It is usual now, from practical considerations, to make the bolts of both piston and connecting-rod of the same size; the bolts therefore should be calculated from the strain on the connecting-rod. In order that the whole of the stretch shall not come on one section, as at the bottom of the last thread of an ordinary bolt, it is better to turn part of the body of connecting and piston-rod bolts to the same diameter as at the bottom of the thread, leaving it a little larger than the diameter

over the thread close to the head, and in way of any joint—that is, the bolt is made with a *plus* thread, and bearing collars where required.

Connecting-rod Brasses.—The crank-pin brasses are more severely tried than any others about an engine, and, therefore, should be most carefully designed, and made of the very best material. Some engineers make the brasses to form the end of the rod (fig. 48), and retained to it by bolts and a wrought-iron cap; others prefer that they shall only act as bushes or liners to the connecting-rod, sometimes fitting them into a square or octagonal recess in the rod end, and held in place by a flat cap and bolts, just as is generally done to piston-rod ends; but more generally they are fitted in duplicate halves, as shown in fig. 47. The former plan is a very expensive one when they are of large size, on account of the great weight of brass required, and consequently are also costly to renew when worn, besides which they are very liable to get out of shape when heated, and to crack through the crowns. The latter plan avoids the use of so much brass, gives a good solid bed to the brasses, and leaves the bolts free of all strain except tension. When rods are made in this way it is usual to forge the head of the rod solid, and turn it and the cap at the same operation; the hole for the brasses is bored or slotted out (the latter when the hole is 9 inches and upwards in diameter) roughly; the head is then slotted through or parted in the lathe so as to cut off the cap, the space left by the tool being equal to twice the difference in thickness of the brass at the crown and sides; the cap is then bolted close to the rod, and the hole bored out to the diameter of the brasses measured across the rod. The brasses are kept from turning by a brass distance piece secured between the cap and rod and projecting between the brasses, and in the case of large brasses a short feather is fitted close to each flange in the crown. All brasses have a tendency to close on the pin or journal after having been hot, because the inner surface becomes warm first, and the metal in expanding tends to straighten the curved part; this is resisted by the other part of the brass and the bed in which it is fitted, and in consequence this inner surface gets compressed permanently, so that on cooling down it contracts, and tries then to give the brass more curvature, and so presses hard on the journal. This is the reason why some bearings will never work cool but always a trifle warm, this slight amount of heat causing the brass to expand so as to truly fit the journal.

White metal is better than bronze for the rubbing surface of the crank-pin brasses, and it is important that the white metal shall project beyond the brass so that it alone bears on the pin. For this purpose strips of white metal should be fitted into grooves planed in the brass and be well hammered, so as to thoroughly fill the spaces, after which it should be smoothly bored and fitted to the pin. Brasses which have not been originally designed for white metal may be fitted in this way, or by boring some shallow holes, whose diameter at the bottom is more than at the surface, casting

into them buttons of white metal, and after hammering down boring out the brass so that the white metal stands out beyond the original wearing surface.

A very good plan, but somewhat more expensive and not more efficient than the one above described, is to run the white metal into recesses so cast with the brass, hammer it well in place, bore out, and then plane out the brass intervening between the white metal patches, leaving only slight ridges surrounding the latter, which prevent it from being spread out.

Caps of Connecting-rod Brasses.—The width of the connecting-rod end should be a little larger than its diameter at the end; its thickness (in direction of the length) = 0·6 × diameter at middle.

The thickness of cap at middle = 0·8 × diameter of body of bolts + 0·1 × pitch of bolts.

Thickness of cap at ends = diameter of bolts at bottom of thread.

For ease of manufacture caps are generally made straight and of thickness given by the first rule.

Gudgeon End of Rod.—Direct-acting engines have usually the connecting-rod formed with a fork at the gudgeon end (fig. 47), into which the gudgeon is shrunk.

The diameter of the eye = diameter of gudgeon + 0·9 × diameter of connecting-rod at end.

The thickness of metal around gudgeon = 0·55 × connecting-rod at end.

Width of jaw = 1·1 × diameter of rod at end.
Thickness of jaw = 0·45 „ „

CHAPTER IX.

SHAFTING—CRANKS AND CRANK-SHAFTS, ETC.

Marine shafting is invariably of circular section and generally solid, so that in speaking of a shaft one of this description will be always understood.

In practice, a shaft may be subject to a simple stress, such as twisting or bending alone, or to the combined action of two or more stresses. And, strictly speaking, every shaft is subject to bending and shearing stresses caused by its own weight; but as these latter are usually so small, compared with the stresses to which shafts are subject from external forces, it is usual to omit them from consideration in all calculations of strength. Such stresses, however, must sometimes come under consideration in very extreme cases, as when from some cause the bearings or supports are very far apart, or when a fly-wheel or other heavy fitting is attached to a shaft whose bearings are remote from the centre of gravity of the shaft and fittings.

Twisting Moment.—If a force is acting on a shaft so as to turn it, or tend to turn it, round on its axis, it is called a *twisting force*, and the *effort* of this force is measured by multiplying it by its perpendicular distance from the axis, and is called the *twisting moment*. Suppose P is the thrust along the connecting-rod when at right angles to the crank, and L is the distance of the centre of the crank-pin from the centre of the shaft, P × L is the twisting moment on the shaft.

When *one* force is acting on the shaft as above described, the second force, which completes the *couple*, is the reaction of the bearing, which is equal to P, but acts in the opposite direction. If the force P and the reaction R act in a plane *perpendicular to the axis* of the shaft, they will cause no bending action on the shaft, but there will be a force R tending to shear the shaft across. But in actual practice it is almost impossible that P and R shall act in such a plane, and they usually act in planes parallel to one another, and perpendicular to the axis; hence, the shaft is also subject to a bending action. But if a shaft is turned by means of *two equal* forces acting in opposite directions, one on either side of the shaft and equidistant from the axis and in the same plane, then the shaft is balanced, these forces will cause no pressure on the bearings, and it is subject therefore to twisting stresses only. If one shaft is coupled to another shaft, from which it is to transmit power by two coupling bolts equidistant from the centre, it will only receive a twisting stress. Such is the state of the shafting from the crank-shaft to the propeller-shaft of a screw steamship.

Resistance to Twisting.—Let T be the twisting moment on a shaft in inch pounds, d the diameter of the shaft in inches, and f the strain per square inch on the transverse section of the shaft. Then (Rankine, *Applied Mechanics*, p. 355)

$$T = \frac{\pi d^3}{16} f; \quad \text{or } d = \sqrt[3]{\frac{T}{f} \times 5{\cdot}1}.$$

For wrought iron f should not exceed 9000 lbs., and when the shafts are more than 10 inches diameter 8000 lbs. is the highest stress to which the iron should be subjected. Steel, when made from the ingot and of good materials, will admit of a stress of 12,000 lbs. for small shafts, and 10,000 lbs. for those above 10 inches diameter. If forged from *scrap* mild steel, such as used for boiler and ship plates, f should not exceed 9000 lbs. for the large shafts, and 10,500 for small ones. The difference in the allowance between large and small shafts is to compensate for the defective material observable in the heart of large shafting, owing to the hammering failing to affect it.*

Example.—To find the diameter of an iron shaft subject to twisting only, the force being 100,000 lbs. acting at a distance of 24 inches.

$$T = 100{,}000 \times 24 = 2{,}400{,}000 \text{ inch-lbs.}$$

* Shafts which are only occasionally and for short periods run at maximum power may be strained 25 to 30 per cent. higher.

$$d = \sqrt[3]{\frac{2{,}400{,}000}{8000} \times 5{\cdot}1} = 11.5 \text{ inches.}$$

If a constant force P were applied to the crank-pin tangentially to its path, then the work done per revolution will be $P \times \frac{2\pi L}{12}$; L being the length of the crank in inches; then if R be the number of revolutions per minute,

$$\text{Work done per minute} = P \times \frac{2\pi L}{12} \times R. \quad . \quad . \quad (1.)$$

But this work is equal to I.H.P. × 33,000; and the twisting moment is P × L constantly. Then

$$(P \times L) \times \frac{2\pi}{12} \times R = \text{I.H.P.} \times 33{,}000,$$

and

$$P \times L = \frac{\text{I.H.P.} \times 33{,}000 \times 12}{2\pi \times R}.$$

That is,

$$\text{Mean twisting moment} = \frac{\text{I.H.P.}}{R} \times 63{,}000. \quad . \quad (2.)$$

And as before

$$d = \sqrt[3]{\frac{\text{I.H.P.} \times 63{,}000 \times 5{\cdot}1}{R \times f}}$$

$$= \sqrt[3]{\frac{\text{I.H.P.}}{R} \times \frac{321{,}300}{f}}. \quad . \quad . \quad . \quad (3.)$$

If f be taken generally at 9000 for iron

$$\text{Diameter of shaft} = \sqrt[3]{\frac{\text{I.H.P.}}{R} \times 35{\cdot}7}. \quad . \quad . \quad (4.)$$

But as shafts must be strong enough to resist the *maximum* twisting stress, it is necessary always to base calculations on it instead of on the mean twisting moment.

Professor Rankine directs (*Rules and Tables*, p. 250), in order to find the greatest twisting moment from the mean: if a shaft is driven by a single engine, multiply by 1·6; if by a pair of engines with cranks at right angles, by 1·1; if by three engines with cranks at angles of one-third of a revolution, by 1·05.

These values are, however, very much lower than usually obtained in practice.

For a two-cylinder engine having cranks at right angles, cutting off steam at half-stroke, multiply by 1·256.

For a single-cylinder engine cutting off steam at half stroke, by 2·0.

The following rule holds good for the ordinary engines, as found in general use in the merchant service :—

$$\text{Diameter of the tunnel shafts} = \sqrt[3]{\frac{\text{I.H.P.}}{\text{R}}} \times \text{F}. \quad . \quad (5.)$$

Compound engines, cranks at right angles—

Boiler pressure 70 lbs., rate of expansion 6 to 7, F = 70.
„ 80 „ „ 7 to 8, F = 72.
„ 90 „ „ 8 to 9, F = 75.

Triple compound, three-cranks at 120°—

Boiler pressure 150 lbs., rate of expansion 10 to 12, F = 62.
„ 160 „ „ 11 to 13, F = 64.
„ 170 „ „ 12 to 15, F = 67.

Expansive engines, cranks at right angles, and the rate of expansion 5, boiler pressure 60 lbs., F = 90.

Single crank compound engines, pressure 80 lbs., F = 96.*

Bending Moment.—If a force is acting on a shaft tending to bend it only, its effort is called the *bending moment*, and is measured by multiplying the force by the distance at which it acts from the support of the shaft.

If the shaft is overhung like a cantilever, and a force P is applied at a distance L from the point of support,

$$\text{The bending moment} = \text{P} \times \text{L}. \quad . \quad . \quad (1.)$$

If supported on two bearings, whose distance apart is L, and a force P is applied at a point *midway* between these two bearings,

$$\text{The bending moment} = \frac{\text{P} \times \text{L}}{4}. \quad . \quad . \quad (2.)$$

If the bearings are long—that is, exceeding the diameter of the shaft in length, and are also strong and rigid, so that the shaft is *held* by them sufficiently to prevent flexure taking place in the bearing,

$$\text{The bending moment} = \frac{\text{P} \times \text{L}}{8}. \quad . \quad . \quad (3.)$$

Since, however, few shafts are so secured as to comply with these conditions exactly, any shaft supported in strong bearings not less than 1 diameter long, and whose distance apart does not exceed 10 diameters, and which has to work freely in its bearings, may be treated as partly complying with these conditions, and

$$\text{The bending moment} = \frac{\text{P} \times \text{L}}{6}. \quad . \quad . \quad (4.)$$

When the bearings are not rigid enough to prevent flexure of the shaft within them, L must be measured from the centres of the cap bolts, so that where each cap is held down by a pair of bolts L is measured to the centres of bearings. If the caps and bearings are strong and rigid enough to resist any tendency to bend by the action of the shaft, L may be measured from the edge of the bearing or cap. If the bearing is fitted with brasses, which project beyond the cap and bed so much as to receive little or no support from them, L must still be measured from the edge of cap. In a

* In engines of torpedo boats, catchers, and destroyers, which are run at full speed only occasionally and for short periods, F may be taken at a half of the above values.

few words, the distance must be measured from what would be the actual points of support if it is bent by severe pressure.

Resistance to Bending.—The strength of a circular section shaft to resist bending is only half of that to resist twisting. If M is the bending moment in inch pounds, and d the diameter of the shaft in inches,

$$M=\frac{\pi d^3}{32}\times f; \quad \text{and } d=\sqrt[3]{\frac{M}{f}\times 10{\cdot}2}$$

f is a factor as before, which depends on the material of which the shaft is composed, and its value may be taken as given for twisting on page 187. The only shafts in a marine engine which are subject to *bending only*, are some weigh-shafts having double-ended levers, similar to the side levers of paddle-wheel engines, and their diameter is determined from other considerations than that of mere strength; but with them, as with the crossheads of return connecting-rod engines, care should always be taken that the size suitable for good working in the bearings should be sufficient for strength.

Equivalent Twisting Moment.—When a shaft is subject to both twisting and bending simultaneously, the combined stress on any section of it may be measured by calculating what is called the *equivalent twisting moment*—that is, the two stresses are so combined as to be treated as a twisting stress only of the same magnitude, and the size of shaft calculated accordingly. Professor Rankine gave the following solution of the combined action of the two stresses (vide Rankine, *Rules and Tables*, p. 227):—Let T be the twisting moment on a shaft when M is the bending moment on a section, then taking T_1 as the equivalent twisting moment

$$T_1=M+\sqrt{M^2+T^2}.$$

Example.—To find the diameter of a section of a shaft at which the bending moment is 40,000 inch pounds, when the twisting moment is 250,000 inch pounds. The shaft of iron $f=9000$ lbs.

Here

$$T_1=40{,}000+\sqrt{40{,}000^2+250{,}000^2}$$

$$=40{,}000+10{,}000\sqrt{4^2+25^2}.$$

$$=293{,}170 \text{ inch pounds}$$

$$d=\sqrt[3]{\frac{T}{f}\times 5{\cdot}1}=\sqrt[3]{\frac{293{,}170\times 5{\cdot}1}{9000}}=5{\cdot}5 \text{ ins.}$$

Crank Shafts.—These shafts are subject always to twisting, bending, and shearing stresses; the latter are so small compared with the former that they are usually neglected directly, but allowed for indirectly by means of the factor f.

The two principal stresses vary throughout the revolution, and

the maximum equivalent twisting moment can only be obtained accurately by a series of calculations of bending and twisting moments taken at fixed intervals, and from them construct a curve of strains.

Curve of Twisting Moments.—The twisting moment at any position of the crank is equal to the pressure on the piston multiplied by the distance intercepted by a line through the connecting-rod on a line at right angles to centre line through centre of cylinder.

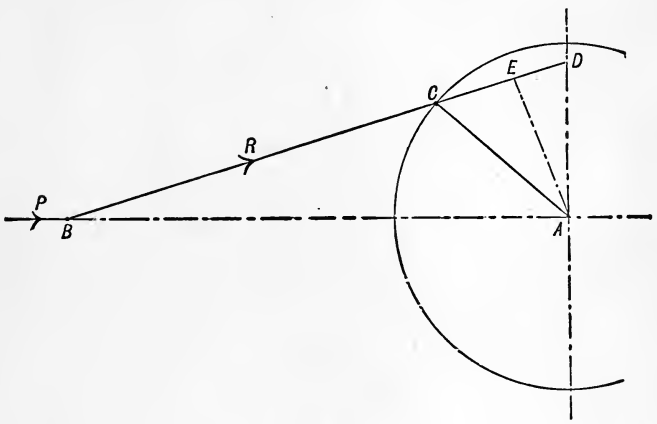

Fig. 49.

Let A B (fig. 49) be the centre line of the engine through the cylinder and shaft centres, A C the position of the crank, B C the connecting-rod, and A D a line at right angles to A B. Produce B C to cut the line A D, and drop from A a line A E perpendicular to B C. P is the load on the piston, and R is the thrust on the connecting-rod. It will easily be proved that the angle D A E is equal to the angle A B D, called for conveniency α. Then

$$P = R \cos \alpha ; \text{ and } A E = A D \cos \alpha.$$

$$\text{The twisting moment} = R \times A E = R \times A D \cos \alpha = P \times A D.$$

Let the twisting moment be calculated at equal intervals of say 10° of angular movement of the crank, so that in the whole revolution there will be 36 observations, or 18 in the half revolution. Draw a line A B (fig. 50), and divide it into 18 equal parts, A a_1, $a_1 a_2$, &c.; erect at these points perpendiculars, and cut off parts $a_1 b_1$, $a_2 b_2$, &c., to represent the value of the twisting moments at each corresponding position of the crank to a suitable scale. Through the points b_1 b_2, &c., draw a curve, which represents the curve of strain on the shaft during the forward movement of the piston; by pro-

ducing A B, and going through a similar operation for the second half of the revolution, the curve of strain during the backward movement of the piston can be obtained.

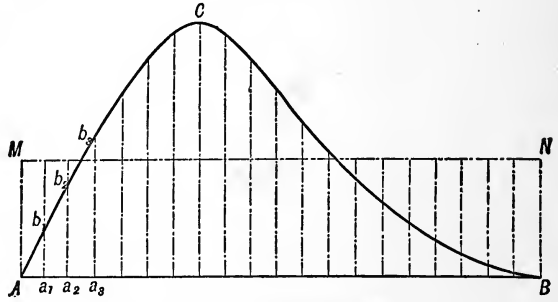

Fig. 50.—Curve of Twisting Moments.

Divide the area enclosed between this curve and the line A B by the length of A B, and the quotient is the *mean* twisting moment, and represented by A M in fig. 50, so that the rectangle A M N B is equal in area to the figure A B C.

The value of A M may be calculated by taking a mean of the values of a_1b_1, a_2b_2, &c.

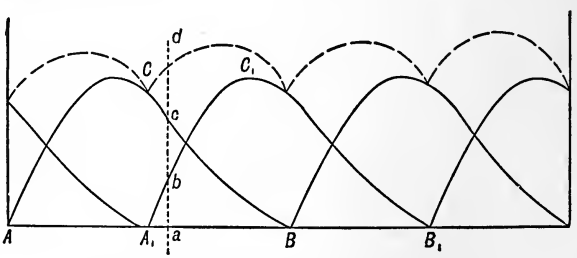

Fig. 51.—Curve of Combined Twisting Moments.

When there are two engines, that is, two pistons operating on one shaft, the combined twisting moment is found by drawing the curve of twisting moments of each crank separately, transposing that of one on that of the other in a position corresponding to the relative position of the cranks. In fig. 51 A C B is the curve of strain on one crank, and $A_1C_1B_1$ that on the other, which is at an angle with it of degrees represented by AA_1. The combined twisting moment at any period a is represented by $a\,d$, which is equal to $a\,b + a\,c$, and the dotted curve $C\,d\,C_1$, &c., represents the curve of combined twisting moments.

The maximum twisting moment will be at the point where the curve is highest, and the ordinate may be measured and its value

found by referring to the scale to which the curve is drawn. The mean twisting moment may be found by measuring the area included between the dotted curve and the base line and terminal ordinates, and dividing by the base line, or by taking a mean value from the ordinates as before.

If there are three engines a similar operation will indicate the maximum twisting moment.

The pressures at the different points may be taken from the indicator-diagrams, or by constructing diagrams from the conditions under which the engine is to work.

The bending moment on a section of the shaft will vary exactly with the pressure on the crank-pin, and to find the maximum equivalent twisting moment on a section, it is only necessary to construct a secondary curve from the formula $T_1 = M + \sqrt{M^2 + T^2}$ between the point of maximum twisting and that at which the pressure on the piston is greatest.

When steam is not cut off in the cylinder before 0·4 of the stroke, the maximum load on the piston may be used to calculate the bending moment, which is to be combined with the maximum twisting moment to find the maximum equivalent twisting moment. Only when steam is cut off earlier than this does the point of maximum equivalent twisting moment differ much from the point of maximum twisting.

Momentum of Moving Parts.—In making these calculations it has been assumed that the moving parts, such as the piston and rods, have no effect on the force exerted on the shaft; but this is not strictly true, for since these parts are of considerable weight, a part of the energy of the steam is absorbed at the commencement of the stroke in overcoming their inertia, and consequently the strain on the crank-pin is less then than is represented on the curves. Again, towards the end of the stroke the *momentum*, or energy thus stored in these moving parts, is given out on the crank-pin, and causes larger strains on it than shown by the curve. The calculation of the effect of the momentum of the working parts on the curve of strain is too difficult and tedious for practical purposes, and may be neglected, since any calculations made on the statical strains of a well-designed engine will quite cover all that is necessary to provide for dynamical strains.

The following Table (XI.) gives the relation between the maximum and mean twisting moments of engines working under various conditions, the momentum of the moving parts being neglected.

Overhung Crank.—The simplest form of crank is what is usually known as the overhung crank, such as usually fitted in land engines, and only found now in very few marine engines. The shaft projects beyond the bearing, and has keyed to its end a lever or disc, in which is secured the crank-pin.

The pin is subject to bending and shearing forces, due to the thrust on the connecting-rod. The maximum bending moment on the part of the pin close to the crank is found by multiplying

TABLE XI.

Description of Engine.	Steam cut-off at	Max. Twist. / Mean Twist.
Single-crank expansive,	0·2	2·625
,, ,,	0·4	2·125
,, ,,	0·6	1·835
,, ,,	0·8	1·698
Two-cylinder expansive, cranks at 90°,	0·1	1·872
,, ,, ,,	0·2	1·616
,, ,, ,,	0·3	1·415
,, ,, ,,	0·4	1·298
,, ,, ,,	0·5	1·256
,, ,, ,,	0·6	1·270
,, ,, ,,	0·7	1·329
,, ,, ,,	0·8	1·357
Three-cylinder compound, cranks 120°,	H.P. 0·5, L.P. 0·66	1·40
,, ,, L.P. cranks opposite one another, and H.P. midway,	,, ,,	1·26

the greatest thrust of connecting-rod by the distance to the centre of connecting-rod.

If R is the thrust of the connecting-rod, and l the length of the pin, then

* Bending moment on crank-pin $= \frac{R \times l}{2}$,

and diameter of pin $= \sqrt[3]{\frac{R \times l}{2} \times \frac{10{\cdot}2}{f}} = \sqrt[3]{\frac{R \times l}{f}} \times 5{\cdot}1.$

Example.—To find the diameter of the crank-pin whose length is 14 ins. and the thrust of connecting-rod is 125,000 lbs., f being of iron and taken at 9000 lbs.

$$\text{Diameter} = \sqrt[3]{\frac{125{,}000 \times 14}{9000}} \times 5{\cdot}1 = 9{\cdot}97 \text{ ins.}$$

The crank-arm (fig. 52) is to be treated as a lever, so that if a is the thickness in direction parallel to the shaft axis, and b its breadth at a section x inches from the crank-pin centre, then

Bending moment M at that section $= R \times x$,

$$\text{and } \frac{a \times b^2}{6} = \frac{M}{f},$$

$$\text{or } a = \frac{6\,M}{b^2 \times f}.$$

* For other conditions as to size of pins, *vide* page 204.

If a crank-arm were constructed so that b varied as $\sqrt{x}$ (as given by the above rule), it would be of such a form as to be inconvenient of manufacture, and consequently it is customary in practice to find the maximum value of b, and draw tangent lines to the curve at the points; these lines are generally, for the same reason, tangential to the boss of the crank-arm at the shaft.

The bending moment decreases as the distance from the crank-pin decreases, while the shearing stress is the same throughout the

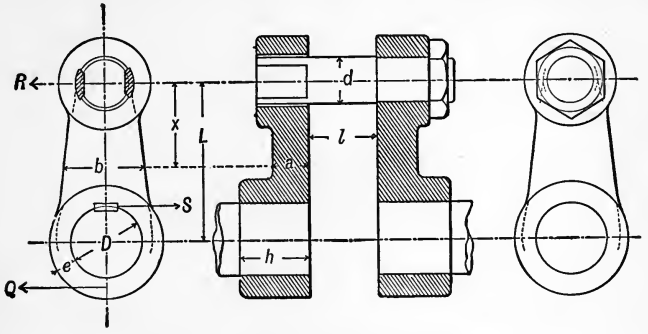

Fig. 52.—Cranks of Paddle-Wheel Engine.

crank-arm; consequently this latter stress is large compared with the bending stress close to the crank-pin, and so it is not sufficient to provide there only for bending stresses. The section at this point should be such that, in addition to what is given by the calculation from the bending moment, there is an extra square inch for every 8,000 lbs. of thrust, on the connecting-rod.

The length of the boss h, into which the shaft is fitted, is from 0·75 to 1·0 of the diameter of the shaft, and its thickness e must be calculated from the twisting stress R × L.

The crank turns the shaft (fig. 52) by exerting a force S on the key, whose centre of effort is on the circumference, and therefore at a distance of half the diameter from the axis of the shaft, so that

$$S \times \frac{D}{2} = R \times L; \qquad \text{or } S = 2\ R \times \frac{L}{D}.$$

If the crank is loose, the area of the section of the key parallel to the shaft must therefore not be less than S ÷ 10,000 lbs. And the strain on the section of the crank-boss opposite the key is

$$Q = S - R = R\left(\frac{2\ L}{D} - 1\right).$$

The stress on the section of the boss across ways is T, so that $T\frac{D+e}{2} = R \times L$; or $T = 2\ R\frac{L}{D+e}$.

The stress on this section should not exceed 9,000 lbs. if of iron, and 11,000 if of steel.

To avoid a complicated expression, it is convenient to assume a relation between h and e, and to substitute the value of e thus found in the above expression. The value of $\frac{h}{e}$ in practice varies from 2, when there is not much space for the crank, to 3, when there is ample room.

Example.—To find the section of the boss of a wrought-iron crank 8 inches long; the pressure on the crank-pin is 54,000 lbs., the diameter of the shaft 10 inches, and $\frac{h}{e}$ assumed at 2·5. Stroke of piston 60 inches.

Here assume $e=\frac{8}{2\cdot5}=3\cdot2$ inches.

$$T=2\times 54000\,\frac{30}{10+3\cdot2}=245{,}454 \text{ lbs.}$$

$$\text{Area}=245{,}454\div 9000=27\cdot27 \text{ inches.}$$

And since $h=8$ inches, then $e=\frac{27\cdot27}{8}=3\cdot41$ inches.

The cranks of marine engines are always of steel or wrought iron, and generally of the same materials of which the shaft is made, so that the length and thickness of boss may bear a constant relation to the diameter of the shaft.

When h = D, then e = 0·35 D, if steel 0·3.
„ h = 0·9 D, „ e = 0·38 D, „ 0·32.
„ h = 0·8 D, „ e = 0·400 D, „ 0·33.
„ h = 0·7 D, „ e = 0·41 D, „ 0·34.

The crank-eye or boss into which the pin is fitted, should bear the same relation to the pin that the boss does to the shaft.

Cranks are always shrunk on to both shaft and pin, and when this operation is carefully and well done, a key to the latter is almost unnecessary, and some engineers have latterly omitted to fit one to even very large pins; some engineers simply drill a hole half into the shaft and half into the crank, and drive into it a steel pin so as to answer the purpose of a key.

The diameter of the shaft end on to which the crank is fitted should be 1·1 × diameter of the journal. Overhung cranks are very rarely fitted now to screw engines, as they often proved to be very unsatisfactory, from the fact of the whole of the pressure coming on one bearing, and the whole of the bending and twisting stresses being taken by one crank and journal.

Paddle Shafts.—The cranks of a paddle-wheel engine (fig. 52) are overhung, and in the case of double engines, the arm to which the

pin is secured is the one fitted to the intermediate shaft; the pin fits loosely into an eye on a crank or disc secured to the paddle-shaft, and so drives this latter shaft. The effect of this arrangement is to give a very equable strain to the paddle-shaft, for the pressure of the pin is always at right angles to the crank on the paddle-shaft; and in smooth water the power of each engine is very nearly equally divided between the two wheels, and the *bending* action on the *paddle*-shaft never exceeds half that due to its own cylinder, for when near the dead points the bending moment is at its maximum, and is wholly taken on the crank-arm to which the pin is secured. For these reasons the shaft to which the arm having the crank-pin secured is fitted, must be stronger than the outer shafts, when the ship is intended to work in rough water, as it is *liable* to have to transmit the *whole* twisting force of one engine, and *always* takes, during certain periods of the revolution, the whole bending force from that engine. Hence, if T be the maximum twisting moment from one piston of a double paddle-wheel engine, and M the maximum bending moment from that piston. Then

$$\left.\begin{array}{l}\text{Max. equivalent twisting moment}\\ \text{on the intermediate shaft . . .}\end{array}\right\} = M + \sqrt{M^2 + T^2}$$

$$\left.\begin{array}{l}\text{And maximum equivalent twisting}\\ \text{moment on the paddle-shaft . .}\end{array}\right\} = \frac{M}{2} + \sqrt{\left(\frac{M}{2}\right)^2 + T^2}$$

Exception may be taken to the latter, since at times when one wheel is out of water the whole of the twisting force of both engines is transmitted through the shaft of the wheel which is deeply immersed; but when the maximum combined effect of twisting is on this one shaft, the bending moment on the crank journal is probably less than $\frac{M}{2}$, and is that due to the force found by dividing the maximum twisting moment by the length of the crank, which is approximately $\frac{T \times \sqrt{2}}{L}$; the distance at which this force acts is measured from the face of the crank-arm to the edge of the casting, into which the journal brass is fitted.

Example.—To find the diameter of intermediate and paddle-shafts of a double paddle-wheel engine, having cylinders 80 inches diameter and 60 inches stroke, using steam of 45 lbs. pressure absolute, cutting off at 0·6 the stroke; the distance between the bearing beds being 50 inches.

Max. effective pressure in the cylinder will be about 40 lbs. per square inch.

Hence load on piston $= 5026 \times 40$, or 201,040 lbs.

Max. twisting moment $= 201{,}040 \times 30 = 6{,}031{,}200$ inch lbs.

Max. bending moment $= \frac{201{,}040 \times 50}{4} = 2{,}513{,}000$ inch lbs.

(1.) Max. equivalent twisting moment on intermediate shaft

$$= 2{,}513{,}000 + \sqrt{2{,}513{,}000^2 + 6{,}031{,}200^2} = 9{,}056{,}000 \text{ inch lbs.}$$

$$\text{Diameter of shaft} = \sqrt[3]{\frac{9{,}056{,}000}{8000} \times 5{\cdot}1} = 17{\cdot}9 \text{ inches.}$$

(2.) Max. equivalent twisting moment on paddle-shaft

$$= \frac{2{,}513{,}000}{2} + \sqrt{\left(\frac{2{,}513{,}000}{2}\right)^2 + 6{,}031{,}200^2} = 7{,}417{,}500 \text{ inch lbs.}$$

$$\text{Diameter of shaft} = \sqrt[3]{\frac{7{,}417{,}500}{8000} + 5{\cdot}1} = 16{\cdot}8 \text{ inches.}$$

The outer part of a paddle-wheel shaft is subject to twisting and bending from the reaction of the water on the floats, and from bending due to the weight of the wheel itself. The pressure on the float can be found by dividing the twisting moment by the distance to the centre of pressure of the float from the shaft axis in inches. It is practically sufficiently accurate to measure to the centre of fixed floats, and to gudgeons of feathering floats.

For example, the reaction of the water on the floats of the engine in the preceding example, whose radius to float centres is 140 inches, will be found

$$\text{Pressure on floats} = \frac{6{,}031{,}200}{140}, \text{ or } 43{,}080 \text{ lbs.}$$

The twisting moment on the shaft is the same at the outer bearing as at the inner, and is 6,031,200 inch lbs. The weight of the wheel is 20 tons, or 44,800 lbs., and the distance of its centre from the bearing is 40 inches.

* Max. bending moment $= (44{,}800 + 43{,}080) \times 40$ inches.
$= 3{,}515{,}200$ inch lbs.

Max. equivalent twisting moment . . . $= 3{,}515{,}200 + \sqrt{3{,}515{,}200^2 + 6{,}031{,}200^2}$
$= 10{,}515{,}200.$

$$\text{Diameter of shaft} = \sqrt[3]{\frac{10{,}515{,}200}{8000} \times 5{\cdot}1} = 18{\cdot}88 \text{ inches.}$$

Crank Shaft of Screw Engines.—In case of the forward crank of a double or treble engine, and the crank of a single engine having two arms, there is the action of one engine only on it. On the *forward* journal and crank-arm, there is a twisting action sufficient to overcome the friction, and to drive the eccentrics if fixed in this

* In smooth water the bending force is really the *resultant* of the weight and reaction on the floats, and may be taken $= \sqrt{\text{weight}^2 + \text{reaction}^2}$.

part, and half of the whole bending moment due to the thrust on the crank-pin. On the *aftward* journal, the other half of the bending moment, and the whole of the twisting moment, except the small portion required as above; this portion is at certain periods of the revolution so small, that in calculations for the journals it may be neglected.

$$\left.\begin{array}{l}\text{Then equivalent twisting moment}\\ \text{on aftward journal . . .}\end{array}\right\} = \frac{M}{2} + \sqrt{\left(\frac{M}{2}\right)^2 + T^2}$$

$$\text{Strain on forward journal} = \frac{M}{2}.$$

In double crank engines the aftward crank has not only to resist the action of its own piston, but also to transmit the twisting strain of the forward engine. There will be strains from its own piston, which may be calculated in the same way as those on the forward crank, and to these must be added the twisting strain of the forward engine.

Let T_2 be the maximum twisting strain on the after engine from its own piston, and M_2 the corresponding bending moment, T_1 the twisting strain on the forward engine at the same period.

Then on the *forward* journal of the after-crank, the twisting strain is T_1, and the bending strain $\frac{M_2}{2}$, so that—

$$\left.\begin{array}{l}\text{Equivalent twisting moment on}\\ \text{forward journal of after-crank}\end{array}\right\} = \frac{M_2}{2} + \sqrt{\left(\frac{M_2}{2}\right)^2 + T_1^2}.$$

On the *after*-journal of the aftward-crank, the twisting moment is $T_2 + T_1$, and the bending moment $\frac{M_2}{2}$, so that—

$$\left.\begin{array}{l}\text{Equivalent twisting moment on}\\ \text{after journal of aftward-crank}\end{array}\right\} = \frac{M_2}{2} + \sqrt{\left(\frac{M_2}{2}\right)^2 + (T_2 + T_1)^2}.$$

The bending moment on the after-arm of the aftward-crank will be found by calculating the *maximum force on the crank-pin tending to twist the shaft.*

Let T_n be the maximum combined twisting moment, as found by the methods indicated before, L the length of the crank or half-stroke of piston. Then the maximum twisting force at the crank-pin is $T_n \div L$.

The maximum bending moment at any section of the after crank-arm of the aftward crank, whose distance from the centre of the crank-pin is x inches, is $\frac{T_n}{L} \times x$.

The maximum bending moment on a section of the forward arm of the same crank is $\frac{T_1}{L} \times x$.

Example.—To find the sizes of the parts of a crank-shaft of a double expansive engine of 1000 I.H.P., the length of stroke is 40 inches, the cut-off 0·6, the stroke and the cranks at right angles. Revolutions 60 per minute. Mean twisting moment of one engine $= \frac{500}{60} \times 63{,}000$. Since the cut-off is 0·6, the ratio of maximum to mean twisting moment is 1·835 (Table XI.); therefore

Maximum twisting moment of one engine $= 1{\cdot}835 \times \frac{500}{60} \times 63{,}000$

$= 963{,}375$ inch lbs.

Mean twisting moment of both engines $= \frac{1000}{60} \times 63{,}000.$

Ratio of maximum to mean twisting moments is 1·27 (Table XI.); therefore

Maximum twisting moment of both engines $= 1{\cdot}27 \times \frac{1000}{60} \times 63{,}000.$

$= 1{\cdot}333{,}500$ inch lbs.

Maximum turning force on forward pin $= \frac{963{,}375}{20} = 48{,}168$ lbs.

" " aftward " $= \frac{1{,}333{,}500}{20} = 66{,}675$ lbs.

Assuming the distance between the bearings on which the brasses are bedded to be 30 inches.

The maximum bending moment on each of the two forward journals

$$= \frac{48{,}168 \times 30}{8} = 180{,}630 \text{ inch lbs.}$$

That on the two journals of aftward crank

$$= \frac{66{,}675 \times 30}{8} = 250{,}000 \text{ inch lbs.}$$

Then diameter of foremost journal

$$= \sqrt[3]{\frac{180{,}630}{8000}} \times 10{\cdot}2 = 6{\cdot}13 \text{ inches.}$$

The maximum equivalent twisting moment on after journal of forward crank

$$= 180{,}630 + \sqrt{180{,}630^2 + 963{,}375^2} = 1{,}160{,}630 \text{ inch lbs.}$$

$$\text{Diameter of journal} = \sqrt{\frac{1{,}160{,}630}{8000}} \times 5{\cdot}1 = 9{\cdot}04 \text{ inches.}$$

The maximum equivalent twisting moment on fore journal of aftward crank

$$= 250{,}000 + \sqrt{250{,}000^2 + 963{,}375^2} = 1{,}245{,}000 \text{ inch lbs.}$$

$$\text{Diameter of journal} = \sqrt[3]{\frac{1{,}245{,}000}{8000} \times 5{\cdot}1} = 9{\cdot}25 \text{ inches.}$$

Maximum equivalent twisting moment on aftermost journal

$$= 250{,}000 + \sqrt{250{,}000^2 + 1{,}333{,}500^2} = 1{,}606{,}700 \text{ inch lbs.}$$

$$\text{Diameter of journal} = \sqrt[3]{\frac{1{,}606{,}700}{8000} \times 5{\cdot}1} = 10{\cdot}1 \text{ inches.}$$

The aftermost crank-arm will be 11 inches across the face; to find its thickness 18 inches from the pin.

Bending moment at that section $= 66{,}675 \times 18 = 1{,}000{,}000$ inch lbs.

$$\text{Thickness,} = \frac{6 \times 1{,}200{,}150}{11^2 \times 8000} = 7{\cdot}44 \text{ inches.}$$

In actual practice the crank-shaft would not be made with the four journals all of different diameter, but some engineers make the shafts partly in accordance with theory, by arranging the two forward journals of the same diameter, and the two aftward journals of the same diameter; that is, for the example given above, the journals of the forward crank would be each 9·04 inches diameter, and those of the aftward one 10·1 inches diameter.

Example.—To find the dimensions of the crank-shaft of a single engine, whose cylinder is 30 inches diameter and stroke 50 inches, the steam used is 65 lbs. per sq. in. absolute pressure, and the cut-off at 0·3 the stroke. The distance between foundation facings for shaft brasses is 40 inches. The connecting-rod is 100 inches long. Back pressure and loss at piston are 5 lbs.

The maximum pressure on the piston is $60 \times 706 = 42{,}360$ lbs.

The maximum twisting moment occurs just at the cut-off in this case, and is $42{,}360 \times 24$, or 1,016,640 inch lbs.

The bending moment on each journal at that period $\frac{42{,}360 \times 40}{8}$ or 211,800 inch lbs.

The bending moment on the after arm, at a distance of 22 inches from the centre of crank-pin, is $42{,}360 \times 22$, or 931,920 inch lbs.

$$\text{Diameter of fore journal} = \sqrt[3]{\frac{211{,}800}{8000} \times 10{\cdot}2} = 6{\cdot}46 \text{ inches.}$$

Maximum equivalent twisting moment on after journal

$$= 211{,}800 + \sqrt{211{,}800^2 + 1{,}016{,}640^2} = 1{,}250{,}200 \text{ inch lbs.}$$

$$\text{Diameter of after journal} = \sqrt[3]{\frac{1{,}250{,}200}{8000} \times 5{\cdot}1} = 9{\cdot}27 \text{ inches.}$$

If the crank-arm is 10 inches wide at the face, then thickness of crank-arm at 22 inches from pin $= \frac{6 \times 931{,}920}{10^2 \times 8000} = 7$ inches.

The bending moment at the centre of the pin of a solid or rigidly built up crank-shaft is $\frac{R \times L}{8}$.

Note.—A solid shaft, or one whose continuity of strength is unbroken from end to end, is treated, so far as bending stresses are concerned, as a girder or beam *secured* at its points of support; or as a continuous girder supported at several points when there are more than two journals. Hence, the bending moment in the *middle* between two journals is $\frac{R \times L}{8}$; *and at the points of support* also $\frac{R \times L}{8}$, since change of flexure takes place at a distance $\frac{L}{4}$ from the supports. Marine crank-shafts whose arms are at least 0·7 of the diameter thick, and whose bearings *thoroughly* support the shaft close to the crank-arms, are really subject to little or no bending action *at the journals.*

At and near the end of the stroke the crank-arms are subject to a bending strain applied very suddenly when the steam enters the cylinder, on opening to lead after only slight *compression.* The force should be taken at twice the load on the piston (2 P), and if L_1 is the length of the pin + the thickness of the crank-arm as close to the shaft, then

$$\text{Bending moment} = \frac{2\,P \times L_1}{4} = \frac{P \times L_1}{2}.$$

And the bending moment on the section of *each* arm caused by this force is $\frac{P \times L_1}{4}$ and *acts at right angles* to the bending force, due to the twisting force on the crank. Hence, $b = 6\frac{(P \times L_1)}{4\,(a^2 f)} = \frac{3\,P \times L_1}{2\,a^2 f}$.

In the previous example L_1 may be supposed as 23 inches, and P is 42,360 inches, a is 7 inches; then

$$b = \frac{3 \times 42{,}360 \times 23}{2 \times 7^2 \times 8000} = 3{\cdot}6 \text{ inches.}$$

So that the forward crank-arm must not be less than this thickness at any part.

Crank-shafts for screw engines, when above 10 inches diameter,

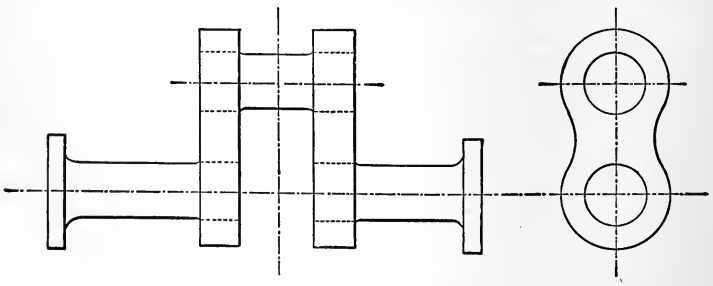

Fig. 53.—Built up Crank-Shaft.

are generally made in duplicate halves, so that in case of damage to a part only half the shaft is condemned, and a spare half-shaft can be easily carried on foreign voyages. And also by this plan there is less labour in replacing the damaged half, than if the whole shaft is moved. Crank-shafts are generally made with a flange coupling at both ends, so as to be reversible in case of a flaw showing near the after end.

Shafts above 15 inches diameter are better built up than in one forging, and they can then be made of steel at an expense very little beyond that of iron; indeed, many engineers now make crank-shafts of all sizes on this principle. The crank-arms are of the same thickness at the pin as at the shaft, and equal to 0·7 to 0·8 of the diameter of shaft journals; the end view, as in fig. 53, shows the usual shape for large cranks—smaller ones are straight on the sides. Great care is required properly to construct such a shaft so as to be perfectly true when finished, and to have the arms shrunk on without leaving the metal around the pins, and shaft-ends in such a state of tension as to be dangerous.

The thickness of the metal around the shaft, &c., can be calculated, as before stated for the overhung crank.

The crank-arms are sometimes forged with the shaft-ends, and the pins shrunk into eyes in the arms. This method has advantages, but it is very unsightly, and misses one of the chief merits of a built crank-shaft.

There are a number of patented forms of crank-shafts, some having the crank-arms of cast steel, and some of forged steel and iron, so arranged as to couple the shafts at the cranks instead of between them (*vide* Appendix).

Couplings.—It is usual now to have the coupling forged with the shaft instead of keyed on as formerly. As a rule the only strain to which a coupling is subject is twisting; hence, if t be the thickness of the coupling, and r the distance of any part of the coupling from the centre of the shaft which is subject to a twisting moment T: the section of metal resisting the force is $2\pi r t$; and if f be the strain per square inch on this section, acting at the distance r, then

$$T = 2\pi r t f \times r = 2\pi r^2 . f . t, \text{ that is, thickness of coupling} = \frac{T}{2\pi r^2 f}.$$

If r is the radius of the shaft subject to twisting only, so that $\frac{\pi r^3}{2} f$ is equal to T. Then

$$\text{Thickness of coupling} = \frac{\pi r^3 f}{2} \div 2\pi r^2 f, \text{ or } \frac{r}{4}.$$

From practical considerations the thickness of the coupling should not be less than the diameter of the bolts, and since the strength of a coupling is somewhat impaired by the holes drilled through it for the bolts, it should not be less than 0·3 the diameter of the shaft subject to twisting only.

Coupling Bolts.—When shafts are close coupled, and the bolts are a good fit in the holes, they are subject to a shearing force only, caused by the twisting strain on the shaft; hence, if d be the

diameter of the bolts, whose number is n, K is the distance from centre of bolts to centre of shaft, T the twisting moment, and D the diameter of the shaft subject to twisting only. Then

$$T = n \frac{\pi d^2}{4} f \times K; \text{ or } d = \sqrt{\frac{T}{0{\cdot}7854 f . K . n}};$$

But $$T = \frac{\pi D^3}{16} f.$$

Hence, $$\text{Diameter of bolts} = \frac{D}{2} \sqrt{\frac{D}{n \times K}}.$$

If K is always taken at 0·8 × D. Then

$$\text{Diameter of bolts} = \frac{D}{2} \sqrt{\frac{1}{0{\cdot}8 \times n}}.$$

Then when there are 5 bolts,

$$\text{Diameter of bolts} = \frac{D}{2} \sqrt{\frac{1}{5 \times 0{\cdot}8}} = \frac{D}{4}.$$

If 3	bolts,	diameter of	bolts	= diameter of	shaft ÷ 3·10.
,, 4	,,	,,	=	,,	3·58.
,, 5	,,	,,	=	,,	4·00.
,, 6	,,	,,	=	,,	4·38.
,, 7	,,	,,	=	,,	4·73.
,, 8	,,	,,	=	,,	5·06.
,, 9	,,	,,	=	,,	5·37.
,,10	,,	,,	=	,,	5·67.

The number of bolts in a coupling depends sometimes on circumstances, but usually there should be one for every 2 inches of diameter of shaft, and the above proportions are based on this allowance; but when it is necessary to have the couplings as small as possible the number may be increased, and with the consequent decrease in diameter, the centres of bolts may be nearer to the centre of shaft.

The couplings of a two-crank engine, whose shaft is in duplicate halves, should have an even number of bolts; and for those of a three-crank engine, whose shaft is in three duplicate pieces, the number of bolts must be a multiple of three.

Surface of Crank Pins and Shaft-Journals.—Measuring, as in the case of gudgeons and crossheads, the effective bearing surface as the diameter multiplied by the length of the bearing, then the bearing surface of cranks must be such that the pressure per square inch does not exceed 500 lbs.; and in the case of merchant ships, where room will permit of longer pins, 400 lbs. may be allowed. When the brass is recessed, so that it bears only in parts on the shaft, the actual bearing surface should not be exposed to more than 600 lbs. pressure per square inch.

The pins of paddle-wheel engines, owing to the comparatively slow speed of shaft, may be designed to take a pressure of 800 to 900 lbs. per square inch.

The main bearings in which the crank-shaft runs should be such that the pressure never exceeds 600 lbs. per square inch, and for screw engines the pressure should not exceed 400 lbs.; when the brasses are recessed or fitted with white metal strips, the actual bearing or rubbing surface should be such that the pressure does not exceed 600 lbs. per square inch. The main bearings of screw engines, when room admits, should be such that the pressure does not exceed 220, measuring the whole of the bearing, or 300, measuring only the parts on which the shaft bears.

Long-stroke engines now have bearings of sufficient length to admit of the pressure being very much less than as given above.

The length of the crank-pin is from 1 to 1·5 of the diameter, and that of each journal from 1 to 1·5 the diameter of the journal. Vertical engines have usually sufficient space for a crank-pin 1·25 the diameter, and each journal 1·5 the diameter. The foremost journal of a compound engine is often made much shorter than the others, to allow the eccentric sheaves to be nearer the centre, so as to come in line with the valve-rod.

Owing to the comparatively small pressures on the crank pins and journals of three-crank compound and triple compound engines, they may be generally somewhat shorter; but the foremost journal should not be materially less than in a two-crank engine.

Drivers.—In order to avoid any of the thrust of the propeller coming on the crank-shaft and its bearings, the coupling bolts connecting it to the thrust-shaft are sometimes made without heads, so that they are free to move in and out of the holes in the coupling flange of one of the shafts while held firmly in that of the other. When this is so they should be of larger diameter than the ordinary coupling bolts, and the part projecting from the face of the flange into which they are secured should be larger still, so as to form a shoulder, against which they may be tightened up, and to give the necessary strength to resist bending. The faces of the flanges when thus loosely coupled should be from $\frac{1}{4}$ to $\frac{1}{2}$ inch apart. It is found necessary, generally, to provide means for lubricating these drivers, especially in heavily armoured and high-powered war-ships.

Taper Bolts are often used in lieu of the ordinary parallel ones, especially for the shaft next the propeller-shaft, to facilitate their withdrawal. Taper bolts can be used with advantage when the flange is by necessity small, for the screwed end is much smaller than the part at the junction of the two shafts subject to shearing. These bolts also are necessarily a tighter fit in the hole, since the tightening of the nuts draws them farther into the hole.

Cross-keys are sometimes fitted to couplings. Half the key is bedded into a recess in the face of each flange, and so it takes the shearing stress from the bolts.

Since with a number of bolts or drivers it is possible, from wear or bad workmanship, that the strain is taken by only a part of them, it is usual to provide an excess of strength. This provision

can be conveniently effected by proportioning them to the diameter of the *crank-shaft* as if it were subject to twisting only.

Propeller Shafts, sometimes called "screw"-shafts, and sometimes "tail end"-shafts. The propeller shaft is subject to the twisting stress of the engine, and to a bending stress due to the weight of the propeller. In rough weather, when the ship is pitching, the strains are increased and become very severe; for when the screw is partially immersed the twisting stress, by the reaction of the water acting on one side only, causes a bending stress as on a paddle-shaft; and the momentum of the screw when pitching also causes severe bending stresses.

In still water the bending moment on the shaft is the weight of the screw multiplied by the distance of its centre from the stern bush. To provide for the strains in rough weather, the bending moment should be taken at twice this value.

Hence, if T is the maximum twisting moment on the crank-shaft, W the weight of the propeller in pounds, and L the distance of its centre from the stern bush,

$$\text{Maximum bending moment} = 2\ W \times L;$$

and

$$\text{Maximum equivalent twisting moment } T_1 = 2\ W \times L + \sqrt{(2\ W \times L)^2 + T^2};$$

and as before,

$$\text{Diameter of screw-shaft} = \sqrt[3]{\frac{T_1}{f} \times 5{\cdot}1}.$$

Example.—To find the diameter of the screw-shaft for an engine whose maximum twisting moment is 1,333,500 lbs. The weight of the screw is 6000 lbs., and the distance of its centre from stern bush is 20 inches.

$$\text{The max. bending moment} = 2 \times 6000 \times 20 = 240{,}000 \text{ inch lbs.}$$

The max. equivalent twisting moment

$$= 240{,}000 + \sqrt{240{,}000^2 + 1{,}333{,}500^2} = 1{,}594{,}000 \text{ inch lbs.}$$

$$\text{Diameter of shaft} = \sqrt[3]{\frac{1{,}594{,}000}{8000} \times 5{\cdot}1} = 10{\cdot}1 \text{ inches.}$$

It is such a very serious matter when the screw-shaft breaks, that it should always be of ample size, and for ships in the Atlantic trade it should be specially strong. It is usual to make it the same diameter as the crank-shaft, but in some ships even this is not sufficient, and it is now not at all an unusual thing to make them 10 per cent. stronger than the crank-shaft.

When the screw is fitted in a "banjo" frame for lifting above water when the ship is under sail, the shaft is, of course, nearly wholly free from bending stresses.

Outer Bearing.—It was customary to provide an outer bearing on or in the rudder-post, for the extreme end of the screw-shaft to rest upon; but since the rudder-post gives no support sideways, and a very precarious one in any direction, the practice is partially discontinued. Also, it has been found that when ships so fitted have touched the ground with the heel, the screw-shaft was bent, and sometimes dangerously so. The strongest argument in favour of this outer bearing is, that it prevents the loss of the screw when the shaft is broken; but if the shaft is broken, and the ship has to depend on the sails, it is better to be without the screw; and if the shaft is broken diagonally, and the screw is caused to revolve from the motion of the ship, there is great risk of splitting the stern tube. If there is no outer bearing, and the fracture is well within the tube, the screw will not be lost, but go back until the shaft-end butts against the rudder-post, and revolves then without danger. If the shaft breaks close to the propeller, and there is an outer bearing, the danger of damage to the rudder-post is very great indeed, from the wrenching of the bearing on the propeller falling out.

Screw-shaft End.—The shaft end fitted into the screw-boss should be turned to a taper of $\frac{3}{4}$ inch to the foot; if the taper is less than this, as is sometimes the case, extreme difficulty is experienced in getting the screw off. The screw should be secured by a key extending the whole length of the boss, and driven into place after the screw is thoroughly well driven on. The screw is retained in place by a nut, whose screw-thread is the reverse of that of the screw itself. A tail key through the shaft end is preferred by some engineers as a means of retaining the screw in place; but although it is a very safe plan, it is not so convenient as the nut. When a nut is employed a safety key or pin is fitted in rear of it, or else a set-screw or other simple means of locking it is used.

Screw-shafts are encased with brass from the propeller to the inner end of the stern tube in H.M. Navy; but in merchant ships this is only occasionally the case, partly on account of the expense, and partly because it prevents examination of the shaft and the detection of flaws, which may extend unobserved until rupture takes place. Brass casings, on the bearing parts, are used not so much to protect the shaft from corrosion, as on account of its wearing better when running on lignum vitæ, and admitting of wear without weakening the shaft thereby.

When working in sandy water lignum vitæ wears very quickly, and grinds away the brass casing. Ships which are often exposed to this are better without the brass casing and lignum vitæ, and should be fitted in lieu with Fenton's white metal or cast-iron bush, and the shaft either without casing or cased with an iron liner, which may be renewed when worn.

The Stern Bush should be of such length that the pressure per square inch (measured as stated for bearings) does not exceed 50 lbs., and generally without inconvenience it may be arranged

that the pressure is only 30 to 40 lbs. The pressure is, of course, in this case due to the weight of the propeller, together with half that of the screw-shaft. The stern bush in practice is of a length equal to two to four times the diameter of bore. The stern-shaft should be supported on a bearing in the tunnel when possible; when this is either not possible or inconvenient, it may rest on a bush in the stern tube just beyond the stuffing-box.

In the mercantile marine the screw-shaft is partly cased with brass, when the bushes are fitted with lignum vitæ; the brass casings extend from the screw boss to an inch or two beyond the inner end of bush, and also where the shaft passes through the stuffing-box, and inner bush when there is one.

The Thickness of Brass Casing is $0{\cdot}3$ inch $+ 0{\cdot}035 \times$ diameter. In order to easily withdraw the shaft, the diameter of the inner casing should be $\frac{1}{8}$ inch larger than the outer.

Stern Tube.—In the Navy the stern tube is always of brass, and in iron, steel, and composite ships is within another wrought-iron or steel tube secured to the framing of the ship. The lignum vitæ strips are fitted into the tube, either in separate grooves for each strip, or the strips fit in side by side with a brass strip at the top secured by screws to the tube which keys them so as to form a bush. A similar but shorter set of strips are fitted next the stuffing-box. The brass stern tube fits into the stern-post accurately and tightly, and is secured to the bulkhead by a flange, &c.*

In the mercantile marine the stern tube is nearly always of cast iron, whose thickness is $0{\cdot}1$ the diameter. The stern bush of brass fits accurately into the tube, and the stuffing-box neck ring and gland are lined with brass. There are various ways of fitting the stern tube in place.

The common plan adopted by most engineers is to turn the outer end so as to fit accurately and tightly into the hole bored in the stern-post, and secure it by a nut screwed on its end. The inner end has a flange, and next it a projecting rim, which is turned to fit in the hole bored in the bulkhead; the flange is bolted to the bulkhead after a liner is fitted between them.

The tube is sometimes bolted to the stern-post by two lugs cast with it, one above and one below it.

Another plan of fixing the stern tube is to fit its outer end into a recess bored in the stern-post, and secure it by bolts to the bulkhead as before described, and by two strong draw-bolts passing through the flange to a partial bulkhead two or three frame spaces nearer the stern. In this case the stern bush is partly in the tube and partly in the stern-post.

Stern Bushes.—When made of white metal they should be of a thickness $= 0{\cdot}5$ inch $+ 0{\cdot}03 \times$ diameter. Those fitted with lignum vitæ are of brass, and formed with a flange, which is secured to the stern tube by screws, which prevent it from turning or coming out. The lignum vitæ is sometimes fitted in strips, as in brass stern tubes, and sometimes into square holes, the bush being cast as a

* It is usual, however, to fit a separate bush containing the lignum vitæ strips in all but small ships for convenience of repair.

skeleton to hold the wooden blocks. This latter plan is very convenient for small ships, but not a good one for large ones, as the wood by the continued concussion gets impressed on the cast-iron tube. Lignum vitæ wears best in end grain, especially when it is of inferior quality; when cut from a good tree of large size it wears equally well either way.

Lignum vitæ strips should be from $\frac{3}{8}$-inch to $\frac{3}{4}$-inch thick, and about three to four times their thickness in breadth; they must be bevelled so as to leave free watercourses between them. The brass behind the strips should be 0·04 × diameter in thickness, and the metal ridges between the wooden strips of the same thickness. Sometimes the brass bush is dispensed with, and the strips fitted into the cast-iron tube as in the brass tube.

A pipe is fitted leading from the top of the stern tube to the bulkhead, through which the water may run from the tube so as to cause a fresh supply to enter from the sea, and thereby prevent heating.

Thrust-Shaft. — Although the crank-shaft is sometimes made with a collar or collars on it to take the thrust, it is not good practice, especially for large engines. The crank-shaft should be required only to take the strains from the pistons, and be free to move around in its bearings without end pressure; and since any longitudinal displacement of the crank-shaft tends to throw abnormal strains on the working parts, it is better to remove all causes of such a derangement. To this end the thrust collars should be on one of the intermediate shafts, and for convenience on that one next the crank-shaft. If possible the thrust bearing should be in the engine-room, and it is for this purpose chiefly that the collars are sometimes on the crank-shaft.

Thrust.—To find the thrust along the shaft of a screw engine, it is necessary to know the speed of the ship and the effective horse-power. The effective horse-power is the power actually employed in propelling the ship, and of course its relation to the *indicated* horse-power depends on the combined efficiency of the engines and propeller. For the purpose of calculating the surface of the thrust collars, it is sufficient to assume that the effective horse-power is two-thirds the gross I.H.P. If P be the pressure in pounds exerted by the propeller against the thrust bearing, and S the speed of the ship in feet per minute, then

Work done in moving the ship = P × S, and

$$\text{therefore effective H.P.} = P \times S \div 33{,}000,$$

$$\text{or I.H.P.} \times \frac{2}{3} = \frac{P \times S}{33{,}000},$$

$$\text{Then } P = \text{I.H.P.} \times \frac{22{,}000}{S}.$$

Now, if K be the speed in knots per hour,

$$S = K \times \frac{6080}{60},$$

$$\text{Then } P = \text{I.H.P.} \times \frac{217}{K}.$$

P is called the *mean normal thrust.*

Example.—To find the thrust on the shafting of an engine whose I.H.P. is 2000, and the speed of the ship 12 knots per hour.

$$P = 2000 \times \frac{217}{12} = 36{,}166 \text{ lbs.}$$

Now, it will be seen that P varies with the I.H.P., and inversely as the speed, so that the thrust of a particular screw may vary very considerably; for if from some cause the speed is decreased, without a corresponding decrease in the power, the thrust must of necessity increase. This actually occurs in practice, and must be provided for always. The times when the actual thrust exceeds the normal thrust are when the engine first moves, and its power is employed in overcoming the inertia of the ship, when the ship is towing, and when driving against a head wind or sea. It is also to be noted that the speed of ship means speed *through the water;* for it is on this account that so little strain comes on the moorings of a ship whose engines are working at full speed when in a dock or confined piece of water. In this case it is only at first starting that any great strain is thrown on the moorings, for as soon as the water is set into motion so as to flow past the ship in a steady stream, the power is absorbed in facing the stream and really propelling the ship through the water.

Another cause of variation in the thrust is the variation in the twisting moment, which is, as before shown, very great in certain classes of engines.

The surface exposed to thrust may, however, be calculated from the mean normal thrust, and allowance made for all emergencies. This surface should be such that the pressure per square inch from the mean normal thrust does not exceed 70 lbs.; and for tug-boats or ships especially exposed to severe weather, or service analagous to either of these, it should not exceed 50 lbs.

Diameter of Thrust Collars.—Let P be the mean normal thrust, d the diameter of the shaft, and D the diameter of the thrust collars, whose number is n, and the pressure 60 lbs. Then

$$P = 60\left(\frac{\pi D^2}{4} - \frac{\pi d^2}{4}\right) n = 47\,(D^2 - d^2)\,n;$$

and

$$D = \sqrt{d^2 + \frac{P}{47\,n}}.$$

The thickness of each collar for mere strength

$$= \frac{P}{n} \div (\pi d \times 1000) = \frac{P}{3142\, d\, n}.$$

In practice the thickness of each collar $= 0{\cdot}4\ (D - d)$.

(1.) Space between the collars, if rings are of solid brass $= 0{\cdot}4\ (D - d)$.

(2.) Space between the collars, if rings are of cast iron faced with brass or white metal $= 0{\cdot}75\ (D - d)$.

(3.) Space between the collars, if rings are of hollow brass for water to circulate through $= D - d$.

The number of collars depends very much on the size of the engine and the prejudice of the designer. If there are many collars, they are of necessity somewhat small, and although the *chances* are in favour of the majority of them acting efficiently, allowance must be made for the contingency of the whole thrust coming on only one of them, and the larger the number of collars, the less able is each one separately to resist the whole thrust. The chief objection to a few collars is, that they are of necessity of comparatively large diameter, and have, therefore, a higher speed of rubbing surface; there is also the consideration of cost of forging against large collars.

When there are a few large collars a better design of thrust-block is possible, and the rings can be made adjustable without removal.

The number of collars should vary with the size of the shaft, and a very good rule is, that there should be one collar for shafts up to 6 inches diameter, and then an additional collar for every 2 inches of diameter beyond this when the collars are large.

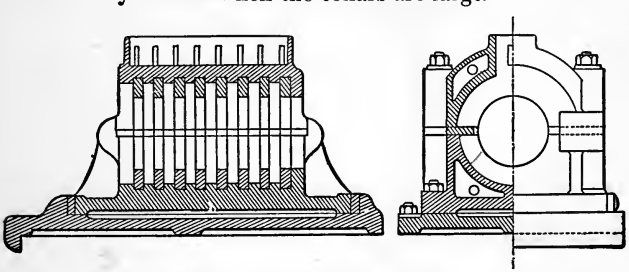

Fig. 54.—Common Thrust-Block.

The common plan of thrust-block with many collars is shown in fig. 54, and a modification of the same is made by having the rings in one casting. These plans are cheap, and do very well for small engines. So long as no heating is allowed to take place in the bearing, it will work very well; but when once it gets out of order it is difficult to deal with and impossible to adjust at sea. It suffers from being enclosed, and from the rings lacking means of independent adjustment. Fig. 55 shows a plan of thrust-block which is most suitable when there are a few large collars. Here

the thrust is taken by horse-shoe shaped pieces of metal faced with bronze or white metal, and fitted sometimes carefully into recesses on either side of the main block. When faced with bronze, each may be adjusted very simply by putting thin tin liners behind the facings, which are hung on steady pins. Phosphor bronze or gun-metal does fairly well for thrusts when the shafts are of wrought iron, but white metal does better and must be employed when the shafts are of mild steel.

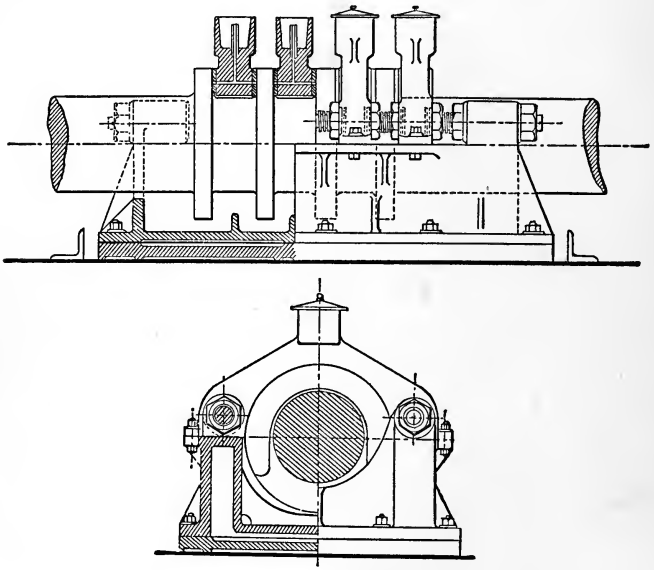

Fig. 55.—Improved Thrust-Block.

Fig. 55 is an elaboration of the form of block. Here the horse-shoes fit over two screwed bars, one on either side of the block; nuts are fitted to these bars, so that each collar may be adjusted by its own nuts, or the whole of them by the nuts at the end.

Both these plans are most successful in practice, in great measure due to the fact that the collars are open and exposed at the top, so as to be easily lubricated and cooled by the air, and to their running in oil, or in a mixture of oil and soapy water contained in the trough below them.

It is most important that a bearing be placed close to the thrust, so that the shaft cannot vibrate and cause uneven pressure over the surface of the collars. The function of the thrust bearing is to take only end pressure. This is particularly the case when designed with horse-shoe rings.

Diameter of Shafts, Practical Rules for.—The Board of Trade

require that the shafts of ships for a passenger certificate should be such as to comply with the following rules :—

Present Board of Trade Rules for Shafts.

For compound condensing engines with two or more cylinders, when the cranks are not overhung :—

$$S = \sqrt[3]{\frac{C \times P \times D^2}{f\left(2 + \frac{D^2}{d^2}\right)}}$$

$$P = \frac{f \times S^3}{C \times D^2}\left(2 + \frac{D^2}{d^2}\right)$$

Where S = diameter of shaft in inches.
d^2 = square of diameter of high-pressure cylinder in inches or sum of squares of diameters when there are two or more high-pressure cylinders.
D^2 = square of diameter of low-pressure cylinder in inches or sum of squares of diameters when there are two or more low-pressure cylinders.
P = absolute pressure in lbs. per square inch, that is, boiler pressure plus 15 lbs.
C = length of crank in inches.
f = constant from following table.

Note.—Intermediate pressure cylinders do not appear in the formulæ.

For ordinary condensing engines with one, two, or more cylinders, when the cranks are not overhung :—

$$S = \sqrt[3]{\frac{C \times P \times D^2}{3 \times f}}$$

$$P = \frac{3 \times f \times S^3}{C \times D^2}$$

Where S = diameter of shaft in inches.
D^2 = square of diameter of cylinder in inches, or sum of squares of diameters when there are two or more cylinders.
P = absolute pressure in lbs. per square inch, that is, boiler pressure plus 15 lbs.
C = length of crank in inches.
f = constant from following table.

TABLE XII.

For Two Cranks—Angle between Cranks.	For Crank and Propeller Shafts. f	For Tunnel Shaft. f
90°	For paddle engines of ordinary type multiply constant in this column suitable for angle of cranks by 1·4	1,047	1,221
100°		966	1,128
110°		904	1,055
120°		855	997
130°		817	953
140°		788	919
150°		766	894
160°		751	877
170°		743	867
180°		740	864
For Three Cranks.			
120°		1,110	1,295

Note.—When there is only one crank the constants applicable are those in the table opposite 180°.

Lloyd's Rules with regard to Shafting.

The diameters of crank and straight shafts are to be not less than those given by the following formulæ:—

TABLE XII*a*.—Diameters of Shafts.

Description of Engine.	Diameter of Crank-Shaft in Inches.
Compound—Two cranks at right angles, . .	$(\cdot04\ A + \cdot006\ D + \cdot02\ S) \times \sqrt[3]{P}$.
Triple—Three cranks at equal angles, . .	$(\cdot038\ A + \cdot009\ B + \cdot002\ D + \cdot0165\ S) \times \sqrt[3]{P}$.
Quadruple—Two cranks at right angles, . .	$(\cdot034\ A + \cdot011\ B + \cdot004\ C + \cdot0014\ D + \cdot016\ S) \times \sqrt[3]{P}$.
Do. —Three cranks, . .	$(\cdot028\ A + \cdot014\ B + \cdot006\ C + \cdot0017\ D + \cdot015\ S) \times \sqrt[3]{P}$.
Do. —Four cranks, . .	$(\cdot033\ A + \cdot01\ B + \cdot004\ C + \cdot0013\ D + \cdot0155\ S) \times \sqrt[3]{P}$.

Where A is diameter of H.P. cylinder in inches.
B ,, first I.P. ,,
C ,, second I.P. ,,
D ,, L.P. ,,
S stroke of pistons in inches.
P boiler pressure above atmosphere in lbs. per square inch.

The screw (tail) shaft to be the same diameter as is required for the crank-shaft.

Intermediate (tunnel) shafting should be at least $\frac{19}{20}$ths of the diameter required for the crank-shaft.

Where engines are of extreme proportions the case should be specially submitted to be dealt with on its merits.

The following is a summary of certain parts of this chapter which will be useful for reference :—

RULE 1.—Diameter of shaft $= \sqrt[3]{\frac{\text{I.H.P.}}{\text{revolutions}}} \times \text{F.}$

TABLE XIII.

Description of Screw Engines.	Value of F for Crank-shafts.	Value of F for Tunnel-shafts.
Single crank single-cylinder, cut-off 0·5	150	130
,, ,, ,, ,, 0·2	200	160
,, two ,, compound,	130	110
Two crank ,, ,, expansive,	120	105
,, ,, ,, compound,	100	85
Three crank three ,, ,,	90	78
,, triple expansion, . .	85	74
Four crank triple or quadruple, . .	95	84

The crank- and screw-shafts of ships which are run at full speed only occasionally and for short periods may be calculated by taking F at half the above values.

TABLE XIII*a*.—SHAFTS FOR PADDLE ENGINES.

Description of Engine.	Value of F Intermediate Shaft Journal.	Value of F Paddle-shaft Inner Journal.	Value of F Paddle-shaft Outer Journal.
Single crank single-cylinder, .	...	80	100
Two crank two-cylinder; cranks virtually at right angles, and connected by link, ...	...	58	65
Two crank two-cylinder, with intermediate shaft; cranks at right angles, ...	58	50	65
Two crank two-cylinder; solid crank-shaft; cranks at right angles, ...	...	55	65

For paddle steamers working only in smooth water the above values of F may be reduced 20 per cent.

The above values of F will suffice for iron shafts, but it is better not to reduce them when employing mild steel, unless the forgings are from ingots of the highest quality.

Crank-arms if forged solid with the shaft—

Breadth . .	. = 1·1 × diameter of shaft.
Thickness . .	. = 0·75 × ,,
Diameter of coupling	. = 2·0 × ,,
Thickness ,, ,,	. = 0·3 ,,
Number of coupling bolts	= diameter of shaft in inches ÷ 2.
Diameter ,, ,,	. = ,, $\div \frac{4n+19}{10}$.
Diameter of crank-pins	. = ,,
Length ,,	. = 1 to 1¼ the diameter of shaft.
Length of journals .	. = 1¼ to 1½ ,,

The following rules give sizes closely approximating to those found in practice, and may be used to obtain the diameter of the shafts, preliminary to making a more elaborate calculation. They are, therefore, very useful in the initial stages of a marine engine design to enable the designer to get on with the work; but being purely empirical they should be used with some caution:—

d is the diameter of the H.P. cylinder in inches.

d_m ,, ,, M.P. ,,

D ,, ,, L.P. ,,

S the stroke also in inches.

F a factor, which for the crank-shaft of ordinary compound engines with cranks at 90° is 12; and for the tunnel-shafts is 13; for three-crank triple compound engines F is 15 for the crank-shaft and 16 for the tunnel-shafts; and for very light triple engines 17 for crank-shafts and 19 for tunnel-shafts.

(1.) Ordinary compound engines

$$\text{diameter of shaft} = \frac{d + \text{D} + \text{S}}{\text{F}}.$$

(2.) Triple compound three-crank engines

$$\text{diameter of shaft} = \frac{d + d_m + \text{D} + \text{S}}{\text{F}}.$$

Since it is usual for $d + d_m$ to equal or nearly equal D; and d_m is usually equal to $1{\cdot}5\,d$; then $d + d_m + \text{D} = 2\,\text{D}$ or $5\,d$. Then diameter of crank-shaft of a three-crank triple compound engine $= \frac{d}{3} + \frac{\text{S}}{15}$, or $= \frac{2\,\text{D} + \text{S}}{15}$.

Hollow Shafts.—The steel shafts in naval ships are now almost invariably made hollow in order to have the maximum strength

with the minimum weight. It is seen that the strength of shafts varies as the cubes of their diameter, but the weight varies as the square; hence, a shaft of ten inches diameter is only 23½ per cent. heavier than one of 9 inches diameter, but by the above rule it is 37 per cent. stronger. Now, if the weight of the 10-inch shaft be reduced to that of the 9-inch shaft by boring a hole 4·36 inches through it longitudinally, its strength to that of the latter will then be roughly $10^3 - 4{\cdot}36^3$ to 9^3; or 917 to 729, or nearly 26 per cent. stronger.

This hollow shaft will also be much stiffer against bending by its own weight, and therefore very suitable where the supports are necessarily far apart; it will, however, be much more costly of manufacture than a solid shaft.

The exact calculations for hollow shafts differ somewhat from that given before on the basis of the cubes of diameters; the late Professor Rankine showed (*Applied Mechanics*, p. 355) that if d is the diameter of a solid shaft, d_1 that of a hollow one whose internal diameter is d_0, then

$$\frac{f \times d^3}{5{\cdot}1} = \frac{f(d_1^4 - d_0^4)}{5{\cdot}1 \times d_1}; \text{ or } d^3 = \frac{d_1^4 - d_0^4}{d_1}.$$

Now, in general practice, $d_0 = \frac{d_1}{2}$.

Substituting this value in the above,

$$d^3 = d_1^3 \times \frac{15}{16}; \text{ or } d_1 = d\sqrt[3]{\frac{16}{15}} = d \times 1{\cdot}022.$$

That is, the diameter of a hollow shaft to equal a solid one in strength should be only 2 per cent. larger when the hole is as much as half the diameter.

CHAPTER X.

FOUNDATIONS, BED-PLATES, COLUMNS, GUIDES, AND FRAMING.

For the good working of an engine it is essential that the fixed parts, such as bed-plate, framing, &c., shall not only be strong enough to resist the strains to which they are subject, but rigid and stiff enough to prevent any tendency to change of form which would throw abnormal strains on the working parts. With this object in view it is usual to construct such parts of cast iron; and from their form and general construction this metal enables the

engineer to manufacture a cheap structure having the necessary qualities. But since cast iron lacks tensile strength, and is comparatively unsuited to withstand sudden shocks, structures made of it cannot be so light as if made of wrought iron or steel; so that when extreme lightness of machinery is aimed at the framing is usually made of steel or wrought iron, and rigidity given to it by cross bracing, &c. This latter system is, of course, an expensive one in most engines, and only adopted when economy of weight is of more importance than economy of manufacture. Although cast-iron framing and bed-plates are undoubtedly cheaper and better for engines generally, a system of construction with wrought iron or steel is preferable for very large engines, and taking into account cost of patterns and risk in casting may be more economical.

Steel manufacturers can now, however, produce large and moderately complicated castings in steel, and the foundations and frames of naval engines are being made wholly of that material.

Bed-plates and Foundations.—Vertical engines are usually built on a superstructure called by these names, and sometimes known as the *sole-plate*. It contains the main bearings for the crank-shaft, and on it are the facings for the columns, condenser, &c., and it often contains the waterways leading from the condenser to the pumps. This form of sole-plate underlies the *whole* of the engine, and is most suitable when the engines are to be fitted into a ship of light construction; it is, however, somewhat heavier and more expensive than the one generally adopted (fig., Ch. xiii.) when the condenser is fitted with horizontal tubes in a fore and aft direction. The foundation then contains only the main bearings, and has facings for the front columns only; it is bolted to feet on the front of the condenser, so that with the latter it forms the base or engine superstructure. The condenser is in this case lower down, and the weight and cost of half the sole-plate is saved. The part of the foundation fitting to the feet on the condenser front should be of good depth, the flanges strong, notched one into the other, and strongly bolted at top and bottom. The transverse parts of the bed-plate, into which the main bearing brasses are fitted, are sometimes formed like inverted bowstring girders, and are unsupported by the bed built in the ship, but span the space between. This is convenient sometimes, especially when the shaft must be low down in ships with a good rise of floor, and also for very small engines; but it must be of strong form, and as it depends for strength only on the connection to the longitudinal parts of the foundation, it is a most convenient form when steel castings are used, as also for very light engines; additional support may be, and often is, given by bolting to the ship at the middle (fig. 58). When this particular style is adopted great care should be exercised in designing the foundation, so that the transverse portions have a good extended connection to the longitudinal ones, especially in the direction of the column bases. If the longitudinal parts are flat and straight on the bottom, so as to be in the same plane as the rest of the foundation,

they may be formed with flanges and bolted to the wrought-iron seating in the ship, and from it receive support and strength.

Main Bearings.—The bearings in which the shaft journals run should approximate, as far as possible, to a hole through a solid support. If it were possible a hole with a bush of suitable metal in it would form the best possible bearing for a shaft; but since the bearing, however well designed and made, will, in course of time, wear somewhat, it becomes a necessity that there shall be some means of adjusting the brasses, so as to prevent the shaft from having side movement when they are worn. In the case of the vertical engine, the weight of the shaft, and the pressure from the piston, act very nearly in the same direction, so that the wear is only vertically above and below the shaft; consequently the adjustment is necessary only in a vertical direction. The greatest strains on the bearings, however, are during the first half of the stroke, and consequently the position of mean pressure on the journals is not exactly vertical; this is also somewhat modified on the upstroke by the tendency of the shaft to roll on the surface of the brasses, and on the downstroke it is aggravated from the same cause. In fitting the brasses for a vertical engine, this should be borne in mind, and every allowance made for taking the wear due to these causes. It is of the utmost importance for the good working and endurance of a crank-shaft, that the bearings are rigid in themselves, and that the framework containing them shall be rigid enough to sustain them perfectly in line one with another. Crank-shafts are more severely tried by the giving or springing of the bearings than any other cause, and they are oftener broken from want of rigidity in the bed-plate and seatings, than from the normal strains from the pistons, so that a shaft may be of ample size to bear the twisting and bending strains if properly supported in its bearings, and yet give way after a few weeks' work in a weak ship.

The brasses are usually formed as shown in fig. 56, and carefully bedded into the recesses provided for them in the foundation. At one time it was usual to design them with projecting facings, called chipping strips, to avoid the labour of chipping and filing the whole of the surface; this was, however, found to be highly objectionable as engines increased in size, and with the increase of boiler pressure, and consequent increased percussive action due to the high initial pressure, such an effect was produced on these strips, and the cast-iron surface on which they were borne, that engineers have gradually abandoned the practice; the planing machines also have rendered such a device unnecessary, as it is nearly as cheap to fit brasses so as to bear over the whole surface as to do so only on strips. The square bottom brass is objectionable on two grounds; one being that it is impossible to remove it in most engines without lifting the shaft, and the other that when it becomes hot it is invariably distorted, from its variation in thickness of metal, with the result that it is broken through the middle longitudinally.

The first of these evils is avoided by making the bottom brass round and of even thickness, so that it can be got out when relieved of the weight of the shaft, by being moved around until it is on the top of the journal. The second evil is also partly avoided

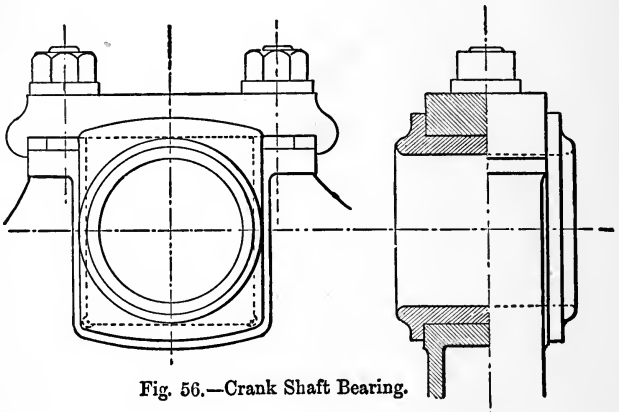

Fig. 56.—Crank Shaft Bearing.

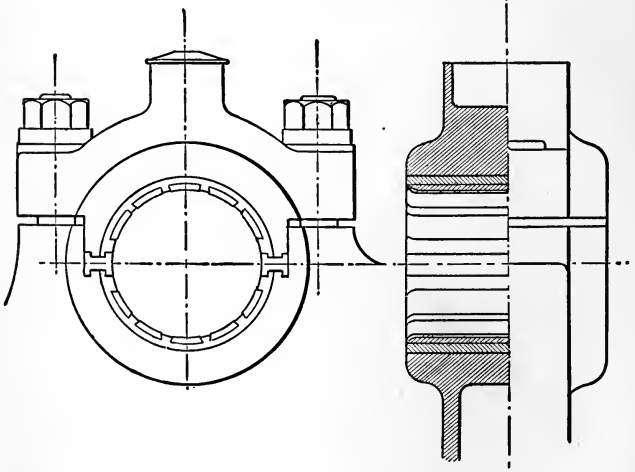

Fig. 57.—Improved Form of Crank-Shaft Bearing.

by making it of an even thickness; but this form of brass is often found cracked, and is liable to heat from its want of stiffness. Both these brasses, when first heated by abnormal friction, tend to expand along the surface in contact with the shaft; this would open the brass, and make the bore of larger diameter, if not pre-

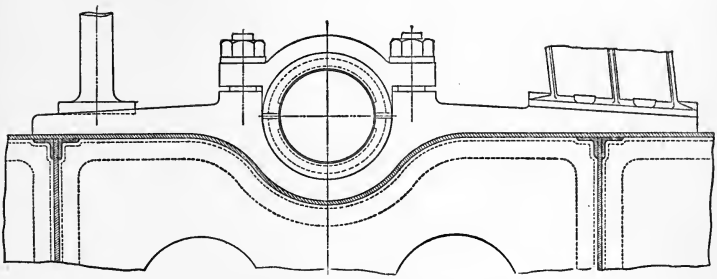

Fig. 58*a*.—Solid Steel Main Bearing.

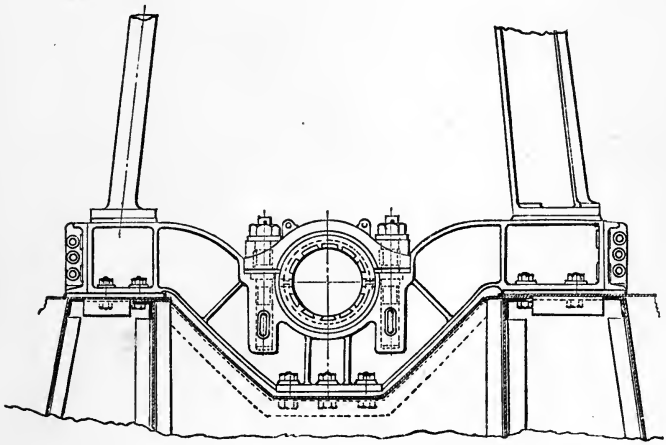

Fig. 58*b*.—Cast-Steel Main Bearing for Naval Engines.

vented by the cooler part near the cast iron, and by the bed-plate itself. If the brass has become hot quickly and excessively, the resistance to expansion produces permanent set on the layers of metal near the journal, so that on cooling the brass closes and tends to grip the shaft; it will then set up sufficient friction to heat again, and expand sufficiently to ease itself from the shaft, and so long as that temperature is maintained the shaft runs easily in the bearing. This is why some bearings always are a trifle warm, and will not work cool. A continuance of heating and cooling will set up a mechanical action at the middle of the brass, which must end in rupturing it, just as a piece of sheet metal is broken by continually bending backwards and forwards about a certain line.

This action of the brass can be prevented by securing it to the bed-plate, along its two longitudinal edges, as shown in fig. 57 by an H shaped strip, which holds both top and bottom brasses, so that they cannot move in their beds. This method is a very simple one, and has been most successful in engines of all sizes.

It is also essential that the bearing to be efficient should be rigid throughout its whole length; this is not the case when the brasses have long overhanging ends, which afford little or no support to the shaft. To this end it is better, when possible, to extend the bed for the brasses, so as to support them over the whole of their length, as shown in fig. 57.

Caps or Keeps for Main Bearings are very generally made of wrought iron, but as stiffness is as necessary as strength, cast steel or even cast iron may be used with advantage in their construction. A wrought-iron cap, which may be amply strong, is often far from stiff enough, while a cast-iron cap, which is stiff enough for good working, is generally amply strong.

Let d be the diameter of the main-bearing bolts (when there are only two to each cap), t the thickness of the cap, and b its breadth, l is the pitch of the bolts, all in inches; f, a factor, which for wrought iron and forged steel is 1, for cast steel 1·2, and for cast iron 2.

$$\text{Thickness of cap} \quad . \quad . \quad = d \sqrt{\frac{l}{b} \times f}.$$

$$\text{Thickness of brass at middle} = \frac{d}{3} \sqrt{\frac{l}{b}}.$$

Main-Bearing Bolts.—Each cap is usually held by two bolts, but very large bearings have four bolts, two on each side, so as to avoid large bolts and heavy nuts, and to distribute the strain over the cap. When everything is in good order and properly adjusted, the strain from the piston should be equally divided between the bolts; but since, from a very slight difference in setting of the nuts, the strain may come on three, and sometimes even on two bolts only, due allowance must be made for this. To meet this it should be assumed that each bolt is capable of sustaining one-third the

load on the piston. If P is the maximum load on the piston in lbs.,

$$\text{Area of each bolt at bottom of thread} = \frac{P}{3f}.$$

For mild steel $f = 6000$ lbs. for small and 7000 lbs. for large bolts.
For good iron $f = 4500$ „ „ 5000 „ „
Also,

$$\text{Diameter of main-bearing bolt} = \text{diameter of cylinder} \times \sqrt{\frac{p}{3f}}.$$

p is the maximum pressure per square inch, and is, in the case of the high-pressure cylinder of a compound engine, the load on the safety valve.

Brasses, so called because generally made of brass.—They should be made of a metal which will withstand wear without wearing the shaft journals, and whose surface is such that the shaft runs on it with a minimum amount of friction. The metal must also possess sufficient strength, so as not to fracture under the percussive strains of the piston, and be free from brittleness, so as not to crack when quickly cooled. Good gun-metal or bronze possesses *all* the qualities essential for brasses, but there are other metals which have certain of these qualities in a higher degree without having them all. Cast iron is harder than ordinary bearing bronze, and when once worn to a smooth surface gives equally good results; but it is liable to fracture from continued shocks and when cooled suddenly. White metals offer least resistance, or produce least friction, but most of them are too soft to be used alone. Of the patent bronzes there are few which are suitable for heavy bearings, and none of them have so far been shown to be much superior to good gun-metal.

When a bearing is of ample size, properly designed and constructed, and well looked after, it may be of almost any kind of metal. If the bearing surface is limited there is a great difference in the behaviour of different metals; and if badly designed and constructed even the best metal will give trouble; but if not properly looked after by the engineer, the best metal and the most careful design are of no avail.

Certain of the white metals have so far given the best results as a bearing surface, and there is every reason for this, inasmuch as they are too soft to cause abrasion of the shaft, and if their own surface is injured it will not form into fine sand, and grind both the surfaces, as all the bronzes do more or less.* When white metal is used it is highly important that the shaft shall bear wholly on it, and not partly on it and partly on the metal containing it, and also that efficient courses for the distribution of the lubricant are provided.

There are three common methods of fitting the white metal into a setting of other metal,—(1.) By casting it into oblong recesses, (2.) by casting it into a large number of small circular recesses,

* White metal is especially of advantage and almost a necessity when shafts are of soft Siemens steel.

and, (3.) by driving in strips into longitudinal grooves, in the same way as the lignum vitæ in a stern bush. The last plan is, on the whole, the most satisfactory, for the strips are well secured, and extend over the whole length of the bearing, leaving several oil courses longitudinally, and the shaft bears on the white metal only; this also possesses the advantage that a strip may be taken out, and a new one refitted with ease, and without heating the brass and running the risk of distorting it. Cast iron is often used as a setting for the white metal, and answers the purpose very well indeed, being much harder than brass, and thereby better supporting the softer metal. When cast iron is used it is, of course, made thicker than when of brass; and sometimes advantage is taken of this to cast the bearing hollow, so as to admit of its being filled with water.

The thickness of "brasses" in the crown depends principally on the diameter of journal.

When of bronze $= 0{\cdot}11 \times$ diameter of journal.
„ cast iron $= 0{\cdot}15 \times$ „

When fitted with white metal strips—

Thickness of strips .	$= 0{\cdot}04 \times$ diameter of journal $+ \frac{1}{8}$ inch.
Breadth „ .	$= 0{\cdot}16 \times$ „ $+ \frac{1}{2}$ „
Space between strips .	= thickness of strip.
Thickness of metal beyond „	$= 0{\cdot}065 \times$ diam. of journal when brass.
„ „ „	$= 0{\cdot}12 \times$ „ „ iron.

Columns.—The columns which support the cylinders of a vertical engine are subject to alternate tensile and compressive stresses, from the steam pressure in the cylinder; to a steady compressive stress from the weight of the cylinders, &c.; and to cross-breaking stresses when the ship is rolling and pitching. As a rule, columns, if designed from considerations of strength only, would not be stiff enough for good working. The same reasons, therefore, which decide the using of cast iron for foundations strongly influence most engineers to choose this metal for columns. The front columns are often made, however, of wrought iron or steel, turned smooth; and all the columns for exceedingly light engines are made of steel or wrought iron, well braced together to prevent vibration. Since cast iron is so superior to wrought iron or steel for resisting compression, and so inferior to either for resisting tension, a good composite column is formed by fitting a wrought-iron or steel tie-bar through a hollow cast-iron column, the latter supporting the cylinder while the former holds it down. The chief objection, however, to both this composite column and those of wrought iron and steel for large engines, is the difficulty of getting good attachment to the cylinder; and since it must be outside the cylinder the columns are necessarily far apart, and away from the centre line of engines. To avoid this difficulty wrought-iron and steel

columns are formed with a flange at each end like a shaft-coupling; but even then the strain on the cylinder is very much concentrated. Columns when of cast iron or of cast steel are made of various shapes, and no rule can be laid down in favour of any particular form.

The columns should be so arranged as to support the cylinders and resist the reaction on the foundation. Some engineers, in thoroughly effecting the latter, completely hide from view the working parts, and make all the bearings, &c., very inaccessible. They should be so placed at the cylinder bottoms that the piston-rod centre is within the lines drawn through the extreme points of back and front columns; and when there are only two columns to each cylinder, the front ones are better to be spread out somewhat, so as to act as struts to resist any tendency to motion of the cylinders when the ship is rolling and pitching, and so as to leave the working parts more open to view. When there are guides on both back and front columns, or when the front columns only have the guides, then this is not possible.

Back columns are generally of different form from the front ones, to suit the guides and bearings for weigh-shaft or levers when so fitted.

Some engineers utilise the back columns as exhaust pipes to the condenser, but this is not good practice, inasmuch as the heat of the steam causes them to expand, and when the guides for the piston-rods are on them the heat is conducted to them with prejudicial results; this latter difficulty is sometimes overcome by placing the guides on the front columns. It is also bad practice to expose any important part of the engine structure subject to heavy strain to unnecessary wear, such as corrosion of the inner surfaces of the casting.

Guide Plates.—In order to have a sound and hard surface for the piston-rod slides to work on, the guide plates should be separate from and secured to the columns; when so fitted they also admit of adjustment, and may be cast hollow, so as to permit of a flow of cooling water through them. This is especially needful for large quick-running engines, where the speed of piston is very high, and any want of lubrication would soon cause most serious damage. Cast iron when once worn smooth gives a splendid surface for a slide, but if by any mischance this surface suffers a little abrasion, it is most difficult to get right again, and will seldom work well again until it is.

The face of the guide plates should have good oil courses cut on it, so that the lubricant is well distributed, and they should be cut deep enough to prevent their being choked with the gluey deposit from the oil. The piston-rod slide should always be provided with a comb, which will carry the lubricant from the drip-boxes, and spread it over the face of the guide.

Framing.—Horizontal engines require a different arrangement of bed-plate and framing from that of the vertical type. Trunk and return connecting-rod engines have no sole-plate proper, as the

cylinders are connected to the condenser casting (fig. 11) by **A** frames, which contain the main bearings; the trunk engine requires no guides, and those for the crossheads of the return connecting-rod engine are on each side of the condenser. These frames must be sufficiently strong to take the whole strain from the pistons, and stiff enough to remain rigid under those strains, or the crank-shaft will be liable to distortion. The usual form approximates to the letter **A**, the two feet being connected to the cylinder front, one at top and one at bottom, in line with the brackets on which the cylinder sits, and by which it is secured to the seatings in the ship. Projecting feet should be cast on the cylinder front to meet those of the frames, so that the connection may be made with driven bolts.

Side stability is obtained for the frames by splaying out their feet sideways, and by making them with a broad base, well stiffened by webs and fillets.

Usually there are only three frames to a two-cylinder engine, and four frames to a three-cylinder engine, the middle ones being very much stronger than the other two, as they are required to take part of the strain of both engines.

The brasses should be fitted so that the centre line through them instead of being horizontal in the transverse plane, should be at an angle with the horizontal line, whose tangent is equal to the weight of half the shaft, divided by the mean pressure on the crank-pin; and for convenience of fitting in and removal of the shaft, some engineers incline them more than is given by this rule. There is of necessity a somewhat weak connection between the frames and the condenser casting, and although this is not of serious consequence in the trunk engine, it is often a cause of trouble in the return connecting-rod engine, and every care should be taken to make it as secure and rigid as possible, and the utmost pains taken to have a strong and rigid seating under the frames, which shall so stiffen the ship and engine as to prevent the crosshead guides and piston-rods from getting out of line with one another.

Horizontal direct-acting engines have a sole-plate, which connects the cylinders to the condenser casting, and contains the guides for the piston-rods, and the brackets for the main-bearings; these latter are usually stayed to the cylinder tops by tie bars through cast-iron struts or by steel tie rods only.

The framing for diagonal paddle-wheel engines is made somewhat on the same principle as that for the horizontal screw engine, with modifications (fig. 6) to suit the altered conditions. The main part of these frames must extend from the cylinder to shaft and down again, so as to form a support for the latter, and having guides for the piston-rod crossheads. Intermediate supports or columns connect this main frame to the foundation. It is not unusual to make these frames of wrought-iron or steel bars, and for light draught steamers of large power frames made of steel angles and plates are considerably lighter than the ordinary cast-iron frames, and can be designed to add materially to the stiffness and strength

of the ship in the neighbourhood of the machinery. This form of frame is imperative, when exceedingly light draught is a necessity, as the hull is so light, to comply with the requirements, as to be unable by itself to stand the racking strains from the engines.

Even when weight is of secondary consideration, the wrought-iron or steel frame is preferable to the cast iron, and when the cost of patterns is taken into account, it is no more expensive. The bearings for the shaft, and the guide-plates for crossheads, are, of course, of cast iron fitted to the wrought-iron work direct.

Side stiffness and stability are obtained by connecting the four frames by wrought-iron tie-bars through the top (fig. 7), and by the main beam before the shaft. The main-bearings for the shaft of a diagonal engine are sometimes so set that the shaft can be lifted vertically; but a better plan is to set them at a slight angle, so that their centre line is in the direction of the *resultant* of the *weight* of shaft, &c., and *mean pressure on the journals* due to the thrust on the connecting-rod.

Entablature of Oscillating and Steeple Engines.—This is usually of cast iron, but may with advantage be made of wrought iron, or steel plates and angles, or, better still, of cast steel, as the strains on it are severe and concentrated, owing to its being supported at so few points. It is no uncommon thing to find it broken and patched after a few weeks' work, and very few of them work without a certain amount of vibration, which must tend to produce rupture in course of time.

It is usually supported (fig. 5) by four columns to each crank, and additional stiffness and stability are imparted by diagonal cross braces to the foundation at each end. It is seldom possible to place the supporting columns in line with the main girders of the entablature, but when possible this should always be done, so as to avoid the canting action which is caused by the centre of support not being in the same plane with the centre of force on the journals. When this is not possible, the sides of the entablature connecting the main girders or rockers should be of extra stiffness, and well connected to them by spreading out webs or fillets. Special advantage should also be taken of the main beams of the ship, to form a powerful tie to the entablature girders, and to prevent their tendency to canting. This can be done generally by multiplying the number of the bolts, and fitting cast-iron filling pieces in lieu of hardwood ones only.

To resist, as far as possible, the tendency to spring, the supporting columns should be of extra size, with strong and broad flanges.

When there are four supporting columns of wrought iron or steel, their diameter in the body should be 0·7 the diameter of the piston-rod, and at each end 0·55 the diameter of the piston-rod.

The collars or flanges on which the entablature is carried, should be equal in diameter to that of the piston-rod, and 0·2 the diameter of the piston-rod in thickness.

If the columns happen to come in line, or nearly so, with the centre of shaft journal, they may be 10 per cent. less in diameter

than given above. The breadth of the rockers should be not less than the diameter of the shaft journals, and the depth at the centre should be calculated as for a box-girder, subject to sudden loads applied at the middle of its length, which is measured from column to column.

Roughly speaking, the depth of the rocker under the bearing brass should not be less than four times the diameter of the piston-rod for engines of ordinary dimensions.

The thickness of metal of sides of rockers

$$= 0{\cdot}4 \sqrt{\text{diameter of piston-rod}}.$$

$$\text{Thickness of top and bottom} = 0{\cdot}6 \sqrt{\text{diameter of piston-rod}}.$$

The bottom brasses of the main bearings should be round, so that the recesses for them may tend to strengthen the rockers rather than weaken them, as would be the case if square-bottomed.

CHAPTER XI.

THE CONDENSER.

THE function of the condenser is to so cool down the exhaust steam as to reduce its pressure to a minimum, and in doing so the steam is converted into water. The very early engines could only work by the aid of condensation, as the steam with which they were supplied was generally of a lower pressure than the atmosphere; it is, in fact, owing to this that the steam-engine owes its birth, for steam was preferred by the early mechanicians because it was so readily changed from a gas to a liquid, and so produced that vacuum which Nature was supposed to abhor, and to fill which she would do the work of horses. The exact relation of the condenser is better understood by following the early history of the steam-engine from the day when the cooling water was admitted to the cylinder after the steam, and then allowed to run freely away from the bottom on the descent of the piston, to the time when Watt, having perceived the waste of energy in always forcing the piston up against the atmospheric pressure, and in admitting the hot steam into the cold cylinder, made the engine double acting, and effected the condensation in a separate chamber. The jet of water continued long after Watt's time as the means of cooling the steam, and gave in later days the distinguishing name to the condenser, which is now nearly entirely superseded by a more perfect apparatus.

The Common or Jet Condenser, now really *uncommon*, consists essentially of an air-tight chamber, into which the steam flows from

the cylinder after having been exhausted of its available energy; the passage of the steam is intercepted by a spray of water, caused by the inrush of water through small holes or narrow slits in a pipe placed across the steamway. If the spray is fine, like a shower of rain, it mixes mechanically with the steam, as well as cools it by surface contact; should the pipe have slits, so as to cause the water to flow in thin broad streams like ribbons, the cooling is principally effected by surface contact. The result in either case is the turning of the steam into water, which falls to the bottom, and is pumped away by the *air*-pump. It might be supposed that the mere turning of the steam into water, thereby causing it to occupy far less space, will cause the vacuum in the condenser; it does, but to so slight an extent and of such an evanescent nature, that unless some other means were at hand the condenser would be useless. Water readily absorbs air when freely exposed to the atmosphere, and gives it up again on being boiled. The feed-water contains air, which becomes mechanically mixed with the steam in the boiler, and passes with it through its various passages, until it enters the condenser, when it parts company with it, and remains as cooled air after the steam is converted to water. The cooling water also contains air, and readily gives some of it up on becoming heated by the exhaust steam, and under the diminished pressure of the condenser. After a few strokes of the piston a sufficient amount of air will be accumulated to raise the pressure to that of the atmosphere, and although the condenser may be kept quite cool there will be no vacuum, but the reverse. The pump, therefore, which exhausts the condenser pumps away the air as well as the water, but since the latter could run away by gravity, it is only the former which is of necessity pumped; hence this pump is rightly named the *air-pump*.

The *shape* of a jet condenser is immaterial so long as the inlet for the steam is high enough to prevent the water running back into the cylinder, and the bottom so formed that the water will all drain into the air-pump bottom. It is generally formed to suit the ship and the working parts of the engine, and was often a part of the engine framing; the back columns of vertical engines were often utilised for the purpose, and did extremely well, except that occasionally rapid corrosion so weakened them as to become dangerous. The frames of the horizontal engines were arranged by some engineers to do duty for condenser, until the Admiralty finally forbade the practice.

The *capacity* of the jet condenser should not be less than one-fourth that of the cylinder or cylinders exhausting into it, and need not be more than one-half of it, unless the engine is a very quick running one; one-third the capacity is generally, however, sufficient. The objection to a large condenser, beyond its cost and weight, is that a longer time is necessary to form a good vacuum in it; and the objection to a small condenser is its liability to flooding and overflowing to the cylinders, unless the engineer is most attentive.

The amount of injection water depends on the *weight* of steam to be condensed *and its temperature;* the *exact* quantity of water required per pound of steam depends on the temperatures of the steam, of the cooling water, and of the "hot-well," or receptacle into which the air-pump delivers the products of the condenser. As the supply of water to the boilers (called the *feed-water*) is taken from the hot-well, and it is an obvious advantage for it to be as warm as possible, the cooling water used is only such as sufficient to produce a good vacuum. With the jet condenser a vacuum of 24 inches was considered fairly good, and 25 inches as much as was possible with most condensers; the temperature corresponding to 24 inches vacuum, or 3 lbs. pressure absolute, is 140°. In actual practice the temperature in the hot-well varies from 110° to 120°, and occasionally as much as 130° is maintained by a careful engineer. To find the quantity of injection water per pound of steam to be condensed:

Let T_1 be the temperature of the steam whose latent heat is L; T_0 the temperature of the cooling water, whose quantity in pounds is Q; T_2 the temperature after condensation, or that of the hot-well.

The *total heat* of the steam $= T_1 + L$.

The heat absorbed by the cooling water will be $(T_1 + L) - T_2$.

But the heat absorbed by the cooling water is also represented by $Q\ (T_2 - T_0)$. Hence,

$$(T_1 + L) - T_2 = Q\ (T_2 - T_0).$$

Or

$$Q = (T_1 + L) - T_2 \div (T_2 - T_0).$$

Now $(T_1 + L) - T_2$ is equivalent to the total heat of evaporation from T_2 and at T_1, and is therefore equal to $966° + 0{\cdot}7 \times 212° + 0{\cdot}3 \times T_1 - T_2$. Or

$$Q\ (T_2 - T_0) = 1114° + 0{\cdot}3 \times T_1 - T_2.$$

Therefore

$$Q = \frac{1114° + 0{\cdot}3 \times T_1 - T_2}{T_2 - T_0}.$$

Example.—To find the amount of injection water required for an engine, the steam at exhaust being at a pressure of 10 lbs. absolute; the temperature of the sea is 60°, and it is required to keep the hot-well at 120°.

The temperature corresponding to 10 lbs. is 193°

$$Q = \frac{1114° + 0{\cdot}3 \times 193° - 120°}{120° - 60°} = 17{\cdot}53 \text{ lbs.}$$

That is, the amount of injection water is 17·53 times the weight of steam for this particular case.

The allowance made for the injection water of engines working in the temperate zone is usually 27 to 30 times the weight of

steam, and for the tropics 30 to 35 times; 30 times is sufficient for ships which are occasionally in the tropics, and this is what was usual to allow for general traders.

The Area of injection orifice and size of pipes is governed by the head of water, vacuum, and length of piping, or, in other words, by the *equivalent head* at the condenser.

Neglecting the resistance to flow at the orifice, and in the pipes and passages, the velocity at the condenser may be found as follows:—

Let h be the head of water above the valve on the condenser in feet; p the pressure in the condenser, and h_1 the equivalent head, and g for gravity,

$$h_1 = h + (15 - p)\ 2{\cdot}3,$$

and velocity in feet per second $= \sqrt{2\,g\,h_1} = 8{\cdot}025\ \sqrt{h_1}$.

Example.—To find the theoretical velocity of flow into a condenser in which the vacuum is 26 inches, and the orifice 12 feet below the water-line of the ship.

Here

$$h_1 = 12 + (15 - 2)\ 2{\cdot}3 = 42 \text{ feet.}$$

Then

$$\text{velocity} = 8{\cdot}025\ \sqrt{42} = 52 \text{ feet per second.}$$

In practice, owing to loss of head due to resistance at valves in the pipes, &c., the actual velocity is only about half that given by the above rule. Hence, in designing it is usual to calculate on a velocity of only 25 feet per second for shallow draught steamers, and 30 for deeper ones.

From these rules, and with such allowances, the following holds good:—

Area of injection orifice in square inches = number of cubic feet of injection water per minute ÷ 10·4 to 12·5 according to circumstances, or = weight of injection water in pounds per minute ÷ 650 to 780.

A rough rule sometimes used is—

Allow one-fifteenth of a square inch for every cubic foot of water condensed per hour. And another

$$\text{Area of injection orifice} = \text{area of piston} \div 250.$$

The injection valve is usually a simple slide or sluice valve, which is readily opened or shut, and regulates the amount of water; for large engines the valve should be of the gridiron type, to avoid large travel. The handle or lever for working the injection valve must be very near the starting gear, so that the water may be shut off as soon as the engine stops.

Snifting Valve.—It is usual to fit, near the bottom of the condenser, a non-return valve, through which the water, &c., may run

or be blown out by steam; it shuts by its own weight, and is pressed on its seat by the pressure of the atmosphere. This is called the *snifting* valve, and it allows of the condenser being emptied of water and air by steam before starting the engine. The valve through which the steam is admitted is called the *blow-through valve*, and was a simple mushroom valve, raised by means of a lever, and closed by the steam pressure on the lever being released.

The snifting valve was usually exposed without a casing, so as to be easily inspected or removed in case of being gagged with dirt, &c.; to prevent the water from being spurted about the engine-room, the valve was formed with a curved rim, which completely covered and overhung the seat like an inverted saucer.

The internal injection pipe or *rose* should be placed down below the flow of steam, so that the cooling water may pass twice through the steam.

Bilge Injection.—A second injection valve is fitted to the condenser, which admits water from the bilges, and is used in case of leakage of the hull. This was no uncommon occurrence in the old wooden paddle-boats and the full-powered screwships, so that this valve was often the means of saving the ship.

The area of this valve should be the same as that of the sea injection, but it was usually only about two-thirds of the latter; the reduction in area is partly due to the shorter pipes and straight leads, as compared with those of the sea injection.

The tail pipe of the bilge injection was either stopped at the end and had a number of small perforations, or was fitted with an efficient rose-box or basket.

Surface Condenser.—It has been seen that with jet condensation the contents of the hot-well consist of a mixture of sea-water and condensed water in the proportion of about 30 to 1, so that the water available for feeding the boiler is very nearly as salt as sea-water. If the cooling water is kept separate from the condensed steam, the latter, which is pure water, may be used as feed water. The idea is by no means a new one, since so far back as 1833 L. Herbert and J. Don patented an arrangement whereby "the air and steam from the eduction passage is drawn by a fan through or among small tubes, so as to be condensed. The tubes may be below the water." In 1835, W. Symington patented a plan "for condensing the steam from the cylinder, and cooling the surplus water from the air-pump, by tubes laid along the keel exposed to water outside a steam vessel." In 1838, J. B. Humphreys took out a patent for "surface condensation by leading the steam through tubes in a vessel kept cold by a flow of water." In 1855, J. Biden claims as his invention a plan whereby "the steam is condensed by passing through tubes, which are led outside the vessel or through passages

inside, kept cool by a flow of sea-water, and the condensed fresh water is used for the boiler." It is even stated that James Watt used a surface-condenser at one time; but the practical success of this mode of condensation is largely due to Mr. Samuel Hall, with whose name the surface-condenser is generally associated.

Condenser Tubes.—It is essential that the surface on which the steam is to be condensed should be metallic, because the material separating the steam from the cooling water must be thin and a good conductor of heat, strong enough to resist the pressure of the water on it, amounting to at least 15 lbs. per square inch, and capable of experiencing sudden changes of temperature without fracture.

The circular section being best suited to resist both internal and external pressures, tubes were naturally chosen as the means of separating the steam from the water, and these tubes admit of a very large amount of surface in a small space.

Copper, being one of the best conductors of heat, was at first chosen as the material from which to make the tubes, and being highly ductile, these could be drawn out very thin indeed. But it was soon found that the acids derived from the fatty matter from the cylinders dissolved some of the copper, and produced soluble salts of that metal, which were pumped into the boiler with the feed-water, and there caused great injury to the iron surfaces. This, for a time, gave the surface-condenser a bad repute, as it was found that the amount saved by them was exceeded by that representing wear and tear of the boilers. This was eventually obviated by having the copper-tubes coated with tin, and by discontinuing the use of tallow in the cylinders. But, notwithstanding this, the boilers, especially those in H.M. Navy, showed signs of premature decay, such as was not customary with those receiving water from a jet-condenser. It was found to be due to the highly corrosive power of redistilled water on the bare surface of the iron, and to the impossibility of keeping a protective scale on the surfaces when such water was used; later research has shown also that some gases which entered the boiler with the original water *chemically combined* with bases, which kept them comparatively innocuous, were freed, and came back *mechanically mixed* with the feed-water from the hot-well, capable of highly destructive action on iron-surfaces.

Copper tubes were, of course, expensive, and the tinning added to their cost as much as 20 per cent., thereby rendering the first cost of a surface-condenser a considerable addition to that of the engine. Brass tubes had long been used for boilers, and as the material was very ductile, and its galvanic action on iron almost nothing, it was tried as a substitute for copper in the manufacture of condenser-tubes with at first mixed success, the want of complete success being partly due to want of care in manufacture, and partly to prejudice. The partial success has since become a complete success, and all condenser-tubes are now made of brass.

The Admiralty, and consequently all foreign governments, require the brass tubes to be tinned when the condenser is of iron, and some of the large steamship companies also continue this practice, but, as a rule, in the mercantile marine, the tubes are untinned. The tinning adds 1¼d. per pound extra to the cost of the tubes, and amounts to an increase of 16 per cent.; it is not necessary, but is only an additional safeguard against the formation of copper salts on the one hand, and to the corrosive action of sea-water on the other. Brass tubes, untinned, after twelve years' constant use, have been found, on being cleaned, to be nearly as good as when new. As the condensers of warships are now always made of brass, the tubes are untinned. As will be shown later on, the loss from blowing off the boilers to prevent dangerous incrustation when fed from the hot-well of a jet-condenser, amounted to as much as 25 per cent., and seldom less in general practice than 12 per cent. This loss is almost wholly avoided by the use of a surface-condenser, and an additional saving of no mean importance is effected in avoiding the necessity of so often stopping to scale and clean out the boilers, as was the case when jet-condensers were used. *The net saving of fuel* by the use of a surface-condenser averages 15 per cent.; and in the hands of a careful engineer, the economy may be extended to even 20 per cent.

Just as 30 or 35 lbs. pressure is the limit for which a box boiler may be safely and conveniently constructed, so that is the limit at which a boiler can safely supply steam to a jet-condensing engine. When sea-water is raised to a temperature of 280° Fahr., which corresponds to a pressure of 50 lbs. absolute, or 35 lbs. above the atmosphere, what are called its *insoluble salts* are wholly precipitated, and form a hard scale on the hot surfaces. The principal insoluble salt in sea-water is sulphate of lime; it is called insoluble, because it does not dissolve in water under ordinary circumstances, and consequently when deposited on the surface of the tubes, &c., will not redissolve and wash off again. The carbonate of lime, and the salts of soda and magnesia, are comparatively harmless, for although the former is precipitated, it is only in a soft muddy state, and, mixed with the brine products of the latter, can be blown off, and easily removed from the boiler when in port. It is for this reason that a surface-condenser is an imperative necessity for engines using steam above 35 lbs. pressure, or 50 lbs. absolute.

For the same reason it is advisable to fit a surface condenser to steamers running in muddy rivers, or on lakes whose water is very dense, as otherwise the boiler soon fills with deposit, which, unless removed and the boiler thoroughly cleaned, will cause serious damage, and be a source of danger as well as a constant cause of priming.

It is seen, then, that by the use of a surface condenser steam of higher pressure than 50 lbs. absolute may be employed; a considerable saving of fuel and time is effected; and there is considerably less risk of burning and otherwise damaging the boiler. A better vacuum is also obtained in it, as a rule, than was possible with

the jet condenser. On the other hand, a surface condenser is heavier, more costly, and occupies more space than the jet condenser; a second pump for the cooling water is necessary, and although the air-pump need not be so large as for a jet condenser, it was often made so in case the jet was used or the tubes leak. The wear and tear and the store account are increased somewhat when there is a surface condenser, and more care and responsibility are laid on the engineers. For sea-going vessels the surface condenser is indispensable and always fitted, but in very fast ships on short voyages, where weight of machinery was of more consequence than economy of fuel, and where the weight of coal carried is small, the jet condenser was often retained. Now, however, even these ships are fitted with surface condensers.

Cooling Surface.—Professor Rankine suggested the following as a means of ascertaining the amount of cooling surface:—Let t denote the temperature of a film of liquid at one side of a metal plate, s_1 the extent of cooling surface; let heat be communicated to the liquid at a temperature t by some such process as the condensation of steam, and let that be abstracted by the flow of a current of air, water, or other fluid, in contact with the metal plate; the weight of fluid which flows past per second being W, its specific heat c', its initial temperature T_1, being lower than t, but higher than T_1. Then in all the equations $t - T_1$ is to be substituted for $T_1 - t$, and $t - T_2$ for $T_2 - t$ in the equation $\frac{S}{c'W} = a \left\{ \frac{1}{T_2 - t} - \frac{1}{T_1 - t} \right\}$; but he also adds that there is not sufficient data to obtain the value of the constants.

Peclet found that with cooling water of an initial temperature of 68° to 77°, one square foot of copper-plate condensed 21·5 lbs. of steam per hour, while Joule states that 100 lbs. per hour can be condensed. In practice, with the triple compound engine, brass condenser tubes, 18 B.W.G. thick, 15 lbs. of steam per square foot per hour, with the cooling water at an initial temperature of 60°, is considered very fair work when the temperature of the feed-water is to be maintained at 120°.

In the early days of surface condensation, it was customary to provide as much cooling surface in the condenser as there was heating surface in the boiler, and a general fear of consequences caused engineers to give a too liberal allowance of surface long after experience had shown that much less would do. The surface in a condenser is much more efficient in abstracting heat than can be that of a boiler. The tubes of a boiler are more than double the thickness of the condenser tubes, and the plates more than eight times; and while the condenser will keep clean with care for a very long time, the boiler gets dirty in a few hours by soot and sooty scale on the one side, and salt incrustation and rust on the other. For these reasons the surface in the condenser may be less than a half of that in the boiler, and under some circumstances even considerably less.

In general practice the following holds good when the temperature of sea-water is about 60°:—

Terminal pressure,	30	lbs.	absolute,	2·2	square feet per I.H.P.
,,	20	,,		1·70	,, ,,
,,	15	,,		1·57	,, ,,
,,	12½	,,		1·50	,, ,,
,,	10	,,		1·43	,, ,,
,,	8	,,		1·37	,, ,,
,,	6	,,		1·30	,, ,,

For ships whose station is in the tropics the allowance should be increased by 20 per cent., and for ships which occasionally visit the tropics 10 per cent. increase will give satisfactory results. If a ship is constantly employed in cold climates, 10 per cent. less suffices.

Condenser Tubes.—They are, as a rule, made of brass, solid drawn, and tested both by hydraulic pressure and steam; the latter test is a very useful one, as faults which escape detection under water pressure are often found out by steam; these faults are due generally to minute particles of flux or slag in the original ingot, and sometimes the faults are in the form of cracks done in the process of drawing. It is by no means an uncommon thing to find a few tubes in a new condenser leaking through minute holes of various shapes; these holes soon become enlarged if the tube is not at once stopped or withdrawn. These faults are not confined to the tubes of a few makers, but may be found in those of all makers at some time or another. Tinning is a preventative, as the defective places are in the process covered or filled with that metal.

Condenser tubes are usually made of a composition of 68 per cent. of best selected copper, and 32 per cent. of best Silesian spelter. The Admiralty, however, always specify the tubes to be made of 70 per cent. of best selected copper, and to have 1 per cent. of tin in the composition, and test the tubes to a pressure of 300 lbs. per square inch. To prove that the tubes are of the required metal, a few pounds of them are melted in a closed crucible, and sufficient spelter added to bring the mixture to contain 62 per cent. of copper. The metal is then cast into an ingot, which when cold is rolled into a sheet, strips are cut from it and tested, and if satisfactory should have an ultimate tensile strength of 24 tons per square inch. The diameter of the condenser tubes varies from ½ inch in small condensers, when they are very short, to 1 inch in large condensers and long tubes. In the mercantile marine the tubes are, as a rule, ¾ inch diameter externally, and 18 B.W.G. thick (0·049 inch); and 16 B.W.G. (0·065), under some exceptional circumstances. In H.M. Navy, the tubes were also, as a rule, ¾ inch diameter, and 18 to 19 B.W.G. thick, tinned on both sides; when the condenser is made of brass the Admiralty do not require the tubes to be tinned. On account of the economy of space and weight that is effected with small tubes most naval engines are now fitted with condensers having tubes ⅝ inch diameter. The smaller the tubes, the larger is the surface which can be got in a certain space. Since larger tubes are of necessity somewhat thicker than the smaller

ones, a square foot of surface costs more when they are adopted, and is not so efficient. Patent tubes made from sheet brass 22 B.W.G. thick, and joined at the seams like a tinsmith's joint and soft soldered, have been tried. The advantage claimed for them is the uniformity of thinness, whereby as little as 22 B.W.G. is sufficient thickness, while it would not be safe to use drawn tubes of that size.

The length of the tubes depends on the arrangement of the condenser, but when they are not held tightly in the plates, but only packed, their unsupported length should not exceed 100 diameters; when held with tight-fitting ferrules it may be 120 diameters.

Tube Plates are now always made of brass, either cast or rolled into plates of suitable size; the latter is preferable as the rolled brass is very tough and close grained, and as strong as wrought iron. Formerly it was no uncommon thing to make the tube-plates of cast iron $1\frac{3}{4}$ to $2\frac{1}{4}$ inches thick, and while some were converted into a substance resembling plumbago after two or three years' work, others have been found sound and good after twelve years' continuous work.

Rolled brass tube plates should be from 1·1 to 1·5 times the diameter of tubes in thickness, depending on the method of packing. When the packings go completely through the plates the latter, but when only partly through the former is sufficient. Hence, for $\frac{3}{4}$ inch tubes the plates are usually $\frac{7}{8}$ to 1 inch thick with glands and tape-packings, and 1 to $1\frac{1}{4}$ inch thick with wooden ferrules.

The tube-plates should be secured to their seatings by brass studs and nuts, or brass screw-bolts; in fact, there must be no wrought iron of any kind on the sea-water side of a condenser. When the tube-plates are of large area it is advisable to stay them by brass rods, to prevent them from collapsing.

Tube Packings.—All attempts to drift or expand the tubes tightly into holes in a brass plate fail, owing to the softness of both plates and tubes; and if it could be done it would be found impossible to draw the tubes for examination and cleaning without damage. Fig. 59 shows a very simple plan, and one that has proved effective under all circumstances. The ferrule is made of soft wood, such as pine or lime tree, very dry and well seasoned; they are made nearly an eighth of an inch larger in diameter than the hole into which they have to fit, and are a good fit on the tube. Before fitting them into place they are squeezed through a die in a press until they can be easily driven into their holes; soon after being fitted into place they absorb moisture and expand circumferentially at each end, and become exceedingly tight on the tube and in the hole. After twelve years' service they are found quite sound. It is urged against them that they are apt to shrink and drop out when the condenser is not in use, but this is not the case, as the swelled projecting ends form collars to prevent this, and they do not shrink so much as is generally supposed, unless by unusual heat. This is one of the cheapest forms of tube packing, and although not used now in H.M. Navy is often employed in the mercantile marine of this and other countries.

Fig. 59.

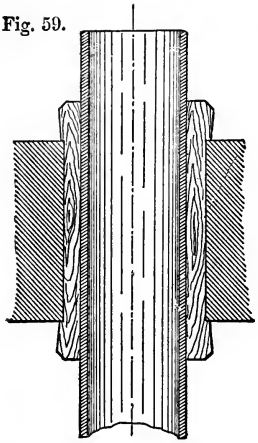

Fig. 60.

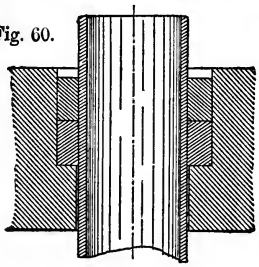

Fig. 61.

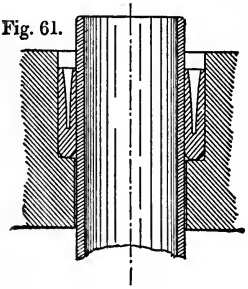

Fig. 62.

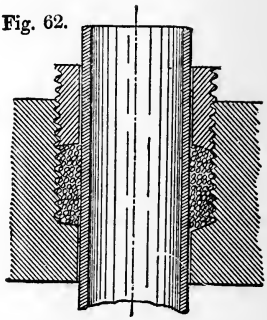

Fig. 63.

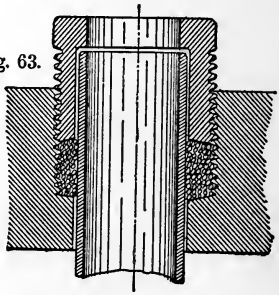

Fig. 64.

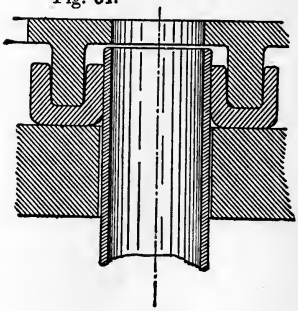

Figs. 59-64—Condenser Tube Packings.

The next simple method (fig. 60) consists of two square section india-rubber washers, fitting tightly on the tube ends, and driven into a recess in the tube-plate. This method is a fairly good one when the water circulates through the tubes, for then the washers are pressed into their place, and are not exposed to the action of grease. Fig. 61 shows an extension of this method; the washers are made like the cup leather-washers for hydraulic machinery, and the water pressure forces the india-rubber tightly against both tube and recess. This plan admits of the tubes being quickly and easily withdrawn, but will not do when the tubes are placed vertically, or when the water is outside the tubes.

Sometimes a sheet of india-rubber (fig. 64), having small holes corresponding to the tubes, was laid on the tube-plates, and forced over the tube ends, and secured by a brass cover plate, having a recess into which each tube end fits, and a hole through the bottom of the recess corresponding to the bore of the tube. This was by no means an economic plan, and it has also the serious objection that if one tube leaks at the joint the whole have to be disturbed in the attempt to stop it. The plan adopted in H.M. Navy, and very generally in the mercantile marine, is that shown in fig. 62. Each tube end passes through a stuffing-box fitted with a screwed gland, and kept tight by a tape washer, or some soft cord as packing. This method is the most expensive of all, as the tube plate is twice drilled and all the holes tapped; the screwed ferrules are expensive, and the labour of packing considerable compared with that of the other methods; also many of the glands are destroyed when the condenser tubes are removed for cleaning. This plan, however, admits of the water being on either side of the tubes; the packing is not affected by heat, and the condenser may remain unused for a very long time, and be quite tight at the end of it; for these reasons it is chosen by the Admiralty. Fig. 63 shows a modification of gland to suit vertical tubes; the gland has an inside rim, which prevents the tube from slipping. It is now very generally used in condensers with horizontal tubes, especially when they are long.

Steam Side and Water Side of Tubes.—This was somewhat of a vexed question, and one on which there is a great deal to be said on both sides. The naval practice was to circulate the water *outside* the tubes, so that the condenser shell may be kept cool and prevented from making the engine-room hotter than can be helped. The almost universal practice of the merchant service and Navy now is to circulate the water *through* the tubes. Independently of the particular reason for the choice of the Admiralty, the balance of argument is in favour of circulating the water through the tubes; for when this is the case there is, (i.) a larger surface of metal exposed to the hot steam; (ii.) the grease deposited on the tubes is easily removed by working a trifle warm, and using a solution of caustic soda or potash, and if this does not remove it, the deposit being soft does not prevent the tubes from being easily drawn, as is the case when scale from salt water is deposited on their exterior

surface; (iii.) the scale from sea-water, which must be removed mechanically, can be so done without removing the tubes; (iv.) a more extended and complete circulation of the cooling water is possible, and that without risk of air accumulation, and without special and expensive diaphragms, &c.; (v.) the condenser is more easily designed, and fits into the general arrangement of most engines, and is smaller, inasmuch as there is no need of an expansion chamber in front of the tubes, as is the case when steam passes through them; (vi.) when it is necessary to examine the packings, or to plug a defective tube, only a water joint is broken; (vii.) india-rubber packings cannot be used when the steam passes through the tubes, as they are destroyed by the fatty matter deposited by the steam, and the sulphurous products of their decomposition attack and destroy the tube ends, &c.; and, (viii.) the thin tubes are stronger to resist internal than external pressures.

On the other hand, when the steam passes through the tubes the bulk of the fatty matter is deposited on the front tube-plate, and prevented from coating the tubes; the large flat sides of the condenser are subject to the very slight pressure due to the head of water, and so may be made much lighter; and there is less hot surface exposed in the engine-room.

Spacing of Tubes, &c.—The holes for ferrules, glands, or india-rubber are usually $\frac{1}{4}$ inch larger in diameter than the tubes; but when absolutely necessary the wood ferrules may be only $\frac{3}{32}$ inch thick.

The pitch of tubes when packed with wood ferrules is usually $\frac{1}{4}$ inch more than the diameter of the ferrule hole. For example, the tubes being $\frac{3}{4}$ inch external diameter, the ferrule hole will be 1 inch and the pitch of the tubes $1\frac{1}{4}$ inch. When india-rubber washers or screwed glands are used, the pitch of the tubes is $\frac{1}{8}$ inch to $\frac{3}{16}$ inch more than their diameter, so that the usual pitch for $\frac{3}{4}$ inch tubes under these circumstances is $1\frac{5}{32}$ inch. If sheet rubber is used the tubes may be much closer together, the $\frac{3}{4}$ tubes being then sometimes pitched only 1 inch apart. The tubes are generally arranged zigzag, and the number which may be fitted into a square foot of plate is as follows:—

TABLE XIV.

Pitch of Tubes.	No. in a square foot.	Pitch of Tubes.	No. in a square foot.	Pitch of Tubes.	No. in a square foot.
1″	172	$1\frac{5}{32}$″	128	$1\frac{1}{4}$″	110
$1\frac{1}{16}$″	150	$1\frac{3}{16}$″	121	$1\frac{9}{32}$″	106
$1\frac{1}{8}$″	137	$1\frac{7}{32}$″	116	$1\frac{5}{16}$″	99

The Condenser.—The surface condenser is generally in the form

of a cylinder or a rectangular parallelopiped, and sometimes a flattened cylinder; the first and last forms are the best suited when weight is a great consideration, and the second the most convenient when space is of first importance; the cylindrical form is by far the cheapest, as the patterns are very simple, the body, when not made of iron, copper, or brass sheets, being *struck out;* the covers, tube-plates, and corresponding flanges can all be faced in a lathe; this form also is by far the lightest, for the two reasons, that the circular plate is the form giving the minimum perimeter for a given area, and consequently a minimum barrel, and that the cylindrical form for either internal or external pressure is the strongest, so that the thickness of metal will be the minimum.

The waterways, or chambers at each end of the condenser, are sometimes cast with it, and sometimes cast separately; in the latter case there is an additional joint, but this is mitigated by its also forming the tube-plate joint; in the former case there is only one joint less at each end through which air can leak, but the plates are more troublesome to fit, and except in the case of the cylindrical form the tube-plate flange is difficult to face.

Great care should be taken in designing a condenser that free outlet is given to any air that may collect near the tubes, and all pockets, where dead water could lie, should be avoided, as the vacuum is very often spoiled by a few of the tubes getting hot and leaking from the above causes.

The hottest water should meet the hottest steam, so that the inlet should be at that part where the condensed vapour leaves the condenser. Some engineers object to this on the ground that the condensed water is unnecessarily cooled, and to avoid this cause the coldest water to meet the hottest steam, and as the circulating water gradually becomes warmed, the condensed water is not cooled so much as in the other case. Now, this practice is not in accordance with theory, and if the matter were looked into a little closer it would be found that although the observations of practice were correct the inferences were wrong. The pressure in the condenser will depend on the temperature of the vapour, and if the temperature of the condensed water were higher than that due to the pressure, vapour would be immediately formed, and the vacuum fall until the pressure became that due to the temperature of the condensed water; of course, it is possible that the condensed water may have a temperature considerably below that of the vapour, but this would only occur in a badly designed or badly worked condenser; in other words, the condensed water is allowed to remain in contact with the cold tubes longer than is necessary, owing to imperfect drainage, and its coolness is not directly due to the system of circulation. Now, if the water is admitted to the hottest part of the condenser first, the absorption of heat owing to the wide difference of temperatures will be considerably more than when the cooling water has become warmed and the vapour cooled, so that their difference of temperature is not so wide; when this is the case, to reduce the vapour to the temperature due to the pressure

required, either a larger surface or more cooling water is necessary. Now, if the coldest water meet the coldest vapour, and the condensed water is well drained as soon as formed, the difference between the temperature of the condensing water and the vapour will not vary very much from entrance to outlet, and less surface and less condensing water will be required; but whichever plan is adopted, if the condensed water is allowed to remain long in contact with the tubes, it will be unnecessarily cooled, and give cold feed-water.

Quantity of Cooling Water.—The necessary amount of circulating water may be calculated in the same way as that for injection water (see page 219), on the principle that the exhaust steam has a certain quantity of heat which is to be expended in raising a mass of sea-water of a certain temperature to about 100°. The quantity of sea-water will of course depend on its initial temperature, which in actual practice may vary from 40° in the winter of temperate zones to 80° of the West Indies and other subtropical seas. In the latter case a pound of water requires only 20 thermal units to raise it to 100°, while 60 are required in the former. From this it is seen that the quantity of circulating water required in the tropics is three times that of the North Atlantic in the spring of the year.

As before, let T_1 be temperature of the steam on entering the condenser, and L the latent heat; T_0 the temperature of the circulating water, and Q its quantity; T_2 the temperature of the water on leaving the condenser, and T_3 the temperature of the feed.

The heat to be absorbed by the cooling water is now $(T_1 + L) - T_3$; and this amount of heat must be equal to $Q\ (T_2 - T_0)$.

Hence,

$$Q = (T_1 + L) - T_3 \div T_2 - T_0.$$

Or

$$Q = \frac{1114 + 0{\cdot}3\ T_1 - T_3}{T_2 - T_0},$$

Example.—To find the amount of circulating water required by an engine whose steam exhausts at 8 lbs. pressure absolute, the temperature of the sea being 60°, and, (2.) the amount required when the temperature of the sea is 75°. The temperature of the feed to be 120°, and that of the water at the discharge 100°. The temperature corresponding to 8 lbs. is 183°.

(1.)

$$Q = \frac{1114 + 0{\cdot}3 \times 183 - 120}{100 - 60} = 26{\cdot}22.$$

That is, the water required is 26·22 times the weight of steam.

If this had been a jet condenser, the quantity would be only 17·48 times.

(2.) When the sea is at 75°

$$Q = \frac{1114 + 0{\cdot}3 \times 183 - 120}{100 - 75} = 41{\cdot}95 \text{ times.}$$

It is usual to provide pumping power sufficient to supply 40 times the weight of steam for general traders, and as much as 50 times for ships stationed in subtropical seas. As will be shown in another chapter, if the circulating pump is double-acting, its capacity may be $\frac{1}{53}$ in the former, and $\frac{1}{42}$ in the latter case of the capacity of the low-pressure cylinder.

Passage of Circulating Water.—The water must be caused to pass over a sufficient amount of surface to become duly heated, if the minimum quantity is to be used. In practice it should travel at least 20 feet lineally through the tubes before leaving the condenser; if this cannot be arranged, then it must remain longer in contact with the surface. Hence in small condensers, where the steam is outside the tubes, the water circulates only twice through them at a slow pace; in larger condensers it may circulate twice through long tubes, or three or four times through shorter tubes at a higher velocity, due to the larger quantity of water. To obtain the best results the velocity of flow should be 110 feet per minute when the sea-water is at 60°, and 170 feet when at 75°. When the water circulates outside the tubes, it is necessary to fit baffle-plates, which shall divert the water and prevent it from taking the shortest course from the inlet to the outlet, and also to prevent the hot water from accumulating at the top part and the cold water from remaining in the bottom. Some skill and ingenuity are often required to fully overcome such difficulties. It is also of the utmost importance to keep the tubes wholly covered with water, by providing means for the air freed from the circulating water to escape.

Where reciprocating pumps are employed the circulating water should be admitted to the condenser direct from the sea, and *pumped from it* through an outlet above the level of the top row of tubes; the pressure in the condenser does not then exceed that due to the head of water, and no shock is given to it by the varying velocity of the circulating pump, as is the case when the water is forced through. When a centrifugal pump is used, it should deliver into the condenser direct from the sea.

Extra Supply Cock.—To provide for the water wasted in blowing off, priming, leakage, &c., it is usual to fit a small cock, through which some of the circulating water may be passed to the steam side of the tubes. The pipe for this should be about one-third the diameter of the main feed pipe, the velocity of flow being nearly nine times that usually provided for in feed pipes. Now that evaporators are in general use, so that the waste can be made up with fresh water, the necessity for such a fitting scarcely exists, but as an emergency provision it may remain.

Impermeator.—A cup with cock attached should be fitted to the condenser close to the exhaust entry, by means of which caustic soda may be injected to the condenser, and spread over the tube surface to dissolve off grease.

Man-Holes and Mud-Holes.—A man-hole is necessary for the purpose of admitting men to clean, repair, or tube the condenser, and

smaller holes should be provided through which mud, grease, scale, &c., may be scraped out. Peep-holes are sometimes formed in the doors, especially if they are large and heavy, through which the tube ends may be seen and examined. These latter are useful when steam is condensed inside the tubes, to admit the nozzle of a steam jet to wash away grease, &c.

Drain Cocks should be fitted so that the condenser may be thoroughly drained when not in use.

Testing.—The Admiralty require condensers to be tested to 30 lbs. per square inch before being placed in the ship, and many steamship companies require the same test, while others are content to test with lower pressures. To provide for such strains, the flat surfaces must be stiffened in the same way as laid down for cylinders, and, when necessary, tied together by stay bars, &c.

Cementing.—It is a good plan to cover the inside of iron condensers, where there is much wash of condensed water, with a good coating of Portland cement, and under the air-pump and in the pump passages it should be at least half an inch thick.

Evaporators.—Since the use of steam of 150 lbs. and upwards the extra supply from the sea has been avoided as much as possible, fresh water being carried in tanks or double bottoms; now the employment of "evaporators" is doing away with the necessity for this and providing a long felt want, and permitting of the use of water tube boilers and modified forms of ordinary marine types.

CHAPTER XII.

PUMPS.

Air Pump.—The function of this pump in all condensers is to abstract the water condensed, and the air which was originally contained in the water when it entered the boiler; and in the case of jet condensers, it pumps out in addition the water of condensation and the air which it contained.

It follows then that the size of the air-pump must be calculated from these conditions, and allowance made for the efficiency of the pump; or, what is the same thing, the result thus found must be multiplied by the ratio between what the pump should do theoretically, supposing its action perfect, and what it does actually in practice.

Ordinary sea-water contains, mechanically mixed with it, one-twentieth of its volume of air, when under the atmospheric pressure. Now, suppose the pressure in the condenser to be 2 pounds, and the atmospheric pressure 15 pounds, neglecting the effect of temperature, the air on entering the condenser will be expanded to $\frac{15}{2}$ times its original volume; so that a cubic foot of sea-water, when it has entered the condenser, is represented by a cubic foot of water, and $\frac{15}{40}$ of a cubic foot of air.

Now let q be the volume of water condensed per minute, and Q the volume of sea-water required to condense it; and let T_2 be the temperature of the condenser, and T_1 that of the sea-water:—

Then $(q + Q)$ will be the volume of water to be pumped from the condenser per minute,

$$\text{and } \frac{15}{40}(q + Q) \times \frac{T_2 + 461^\circ}{T_1 + 461^\circ} \text{ the quantity of air.*}$$

If the temperature of the condenser be taken at 120°, and that of sea-water at 60°, the quantity of air will then be ·418 $(q + Q)$, so that the total volume to be abstracted will be

$$(q + Q) + \cdot 418\,(q + Q) = 1 \cdot 418\,(q + Q).$$

Now, if the average quantity of injection water be taken at 26 times that condensed, $q + Q$ will equal 27 q.

Therefore, volume to be pumped from the condenser per minute

$$= 38\,q$$

Example.—To find the theoretical capacity of a single-acting pump for an engine using 3 cubic feet of water per minute, and the number of strokes being 40.

Volume to be pumped out = 38 × 3, or 114 cubic feet.

$$\text{Therefore, the capacity of the pump} = \frac{114}{40}, \text{ or } 2 \cdot 85 \text{ cubic feet.}$$

If the stroke of the pump be taken at 1·5 feet.

$$\text{The area of bucket} = \frac{2 \cdot 85}{1 \cdot 5}, \text{ or } 1 \cdot 9 \text{ square feet.}$$

Example.—To find the theoretical capacity of a double-acting pump for an engine using 10 cubic feet of water per minute, the number of revolutions being 90, and the stroke of the pump 2·5 feet.

Volume to be pumped out = 38 × 10, or 380 cubic feet.

$$\text{Area of bucket} = \frac{380}{90 \times 2 \times 2 \cdot 5}, \text{ or } \cdot 844 \text{ square foot.}$$

Of course, were these examples worked strictly, it would be necessary to find the relation between Q and q in each case, instead of assuming it at 26 as has been done.

The foregoing calculations, &c., are for jet-condensers, and based

* Absolute zero point, or point of no heat, is 461 degrees below the zero of Fahrenheit's thermometer.

on the supposition that the air-pump also abstracts the condensing water; now in a surface condenser, not only is the air-pump relieved of this latter duty, but, since the feed-water is condensed steam, and has not had time to absorb air, it would seem that its only function is to draw off the condensed water, and might therefore be no larger than a feed pump, as no doubt it might be, did the engine work perfectly; but since ordinary water has to be occasionally admitted to make up for waste, and as slight leakage at the glands and joints very frequently exists, it would be necessary to make the air-pump only about half the size that would be requisite for jet condensation; but when a surface condenser was arranged so as to be worked as a jet condenser, the air-pump had to be large enough to do the work necessitated by this, unless the circulating pump was fitted so as to be worked as an air-pump. It is seldom that a surface condenser is now so arranged as to admit of jet condensation. Too great care cannot be expended on the design of the air-pump for a surface condenser, as the success of many an engine has been marred by a bad vacuum; and doubtless an inch or two of vacuum tells wonderfully on an engine, especially on a compound engine, where the vacuum can almost be told by the speed of the engine. Since, however, the surface condenser was only required to work as a jet condenser, when so fitted, in cases of emergency, which seldom happen, and when such a case does occur it is not of importance that the engines shall work at the highest efficiency or maximum speed, it seems better so to design the air-pump as to best suit surface condensation, rather than to make it of the larger size, and sacrifice a large amount of work in driving it during the long period, when jet condensation is not necessary. In short, the pump should be of such a size as to give its maximum efficiency during the longest time, and if for a surface-condensing engine, it should be designed for that particular service.

Such reasoning did not rigidly apply to the machinery of warships, as a mishap in action might necessitate the use of the jet injection, and at such a time there must be no diminution of speed and efficiency; for this reason it was customary for the Admiralty to stipulate that the air-pump should be of sufficient size to produce a good vacuum when jet condensation was resorted to. But the Admiralty no longer provide for working with jet injection.

In the mercantile marine, especially in mail and passenger steamers, it was customary to effect a compromise by making the pump larger than absolutely necessary for surface condensation, but less than is usual for jet condensation.

The Single-Acting Vertical Air-Pump, having valves in the bucket as well as foot and delivery valves, is by far the most efficient, and, when possible, is generally chosen. If the rod of such a pump is enlarged or the bucket has a trunk to surround the rod, which is attached to a joint in its centre, it is to a certain extent double-acting, since on the upstroke it fills the chamber in which it works, on the downstroke it displaces, and consequently discharges a

volume equal to the volume of the trunk or rod, and on the upstroke discharges the remainder. If the sectional area of the rod or trunk is half that of the bucket, the discharges are equal, and the pump is virtually a double-acting one.

The Double-Acting Air-Pump.—It is not always convenient to have a vertical pump in the horizontal engine, and consequently a horizontal pump was generally employed, and this was almost of necessity double-acting. The bucket in this case works air-tight in a smooth barrel placed beneath the condenser, and has a set of foot and delivery valves for each end. Sometimes, in lieu of a barrel and bucket, a plunger is fitted, passing through a stuffing-box in the diaphragm-plate dividing the condenser-bottom. This latter arrangement generally admits of more room for, and a better disposition of, the valves. Some engineers adopt this form of the horizontal pump for vertical engines, and work it by means of an eccentric formed on one of the crank-arms.

The Efficiency of Air-Pumps.—The efficiency of the single-acting vertical pump is due to the certainty of its action in taking the water, &c., through the bucket-valves, and to the valves from their position so readily closing when required; there is also time for the water to drain into the bottom of the pump on its upstroke, and it is collected there ready for the bucket when it descends. The flow is always in one direction, so that the velocity of flow is not checked by diversion. The water always lies on the valves so as to render them air-tight, and there is very little clearance space, as a rule, between the foot and bucket valves, and between the bucket and head valves.

The want of efficiency of the double-acting horizontal pump is caused by the reverse of some of the above conditions, especially by the failure of the valves in closing, and to the large space between the foot and delivery valves, also by leakage at the gland of the rod, and past the bucket, which is only lubricated by the water on the bottom, and in no small degree by the ever-changing direction of flow. The latter defect is proved by stopping one end of the pump, when it is often found (especially in the case of badly designed pumps, &c.) that the vacuum is not very materially altered. The foot valves are sometimes kept covered with water by allowing the water to pass back again through a pipe from the hot-well to the pump-chamber.

Size of Air-Pump.—The capacity of the air-pump should be calculated from consideration of the conditions under which it is to work, and by the rules given in this and the preceding chapter, and suited to practice by an allowance made for the efficiency of the pump. If the pump is single-acting and well-designed, and is working under favourable conditions, its efficiency may be taken at 0·6; and if the reverse of this 0·4; generally its efficiency is about 0·5, so that the size in practice should be double that given by theoretical calculation. The efficiency of the double-acting pump varies from 0·5 to 0·3, and generally is not more than 0·35; the

size for good working should be nearly three times that given by theoretical calculations.

Hence, when the temperature of the sea is 60°, and that of the (jet) condenser is 120°, Q being the *volume* of the cooling water, and q the *volume* of the condensed water in cubic feet, and n the number of *strokes* per minute,

$$\text{The volume of the single-acting pump} = 2{\cdot}74 \left(\frac{Q + q}{n}\right).$$

$$\text{The volume of the double-acting pump} = 4 \left(\frac{Q + q}{n}\right).$$

In actual practice it is usual to make the air-pump proportional to the capacity of the cylinder or cylinders exhausting into the condenser. The old rule for the air-pumps of paddle-wheel engines supplied with steam of 20 lbs. pressure was to make the diameter of each pump half that of each cylinder, and the stroke half the stroke of the piston; in other words, the capacity of the pump was one-eighth that of the cylinder. For example, a paddle-wheel engine having two cylinders 80 inches diameter and 72 inches stroke, would have two single-acting air-pumps, 40 inches diameter and 36 inches stroke.

The following table gives the ratio of capacity of cylinder or cylinders to that of the air-pump; in the case of the compound engine, the low-pressure cylinder capacity only is taken.

TABLE XV.

Description of Pump.	Description of Engine.	Ratio.
Single-acting vertical, .	Jet-condensing, expansion 1¼ to 2, .	6 to 8
,, ,, .	Surface ,, ,, ,, .	8 to 10
,, ,, .	Jet ,, ,, 3 to 5, .	10 to 12
,, ,, .	Surface ,, ,, ,, .	12 to 16
,, ,, .	,, ,, compound, . . .	18 to 24
Double-acting horizontal,	Jet-condensing, expansion 1½ to 2, .	10 to 13
,, ,,	Surface ,, ,, ,, .	13 to 16
,, ,,	Jet ,, ,, 3 to 5, .	16 to 19
,, ,,	Surface ,, ,, ,, .	19 to 24
,, ,,	,, ,, compound, . .	24 to 28

The vacuum in the condenser of a horizontal engine is liable to be spoiled by leakage at the expansion joint of the exhaust pipe. It is usual to provide for the expansion of this pipe, which, in the Navy, is of brass or copper, by fitting a stuffing-box, gland, &c., on the condenser or cylinder into which the pipe end is free to work; unless this box is deep, and has a good taper at the bottom, and the part of the pipe fitting in the stuffing-box of brass and turned to fit, it is difficult to keep it quite tight. A better plan is to form the

exhaust pipe with a good bend, so as to do away with the joint; or, if this cannot be done, fit a brass or copper *bellows* joint. In compound engines some trouble is often experienced from leakage through the drain cocks of the low-pressure cylinder, and since, when the engine is working under full speed, the pressure in this cylinder is below that of the atmosphere as a rule, to make these cocks at all effective, pipes should be led from them to the condenser.

Pump Rods.—The vertical single-acting pump in paddle-wheel engines is generally worked by a connecting-rod from a crank, or by means of a large eccentric, whose rod passes through a trunk cast with the bucket, and connected to a socket fitted to the bucket, and secured by a brass cap-nut underneath.

Area of section of the rod = 0·01 × area of pump bucket,

Or in case of a round rod,

The diameter of rod = 0·1 × diameter of pump.

When two bolts are fitted to connect the brasses, &c. at the end,

The diameter of each bolt in the body = ·056 × diameter of pump.

When the air-pump is of the single-acting type in screw engines, it is generally worked by means of a rod, either of one of the bronzes or brass rolled or iron cased with brass, having a tapered end fitting into the piston or bucket, and secured by a nut on the top side, or tapered the other way and secured by a cap-nut of brass (fig. 65) on the bottom side.

The diameter of the rod = ·15 × diameter of pump.

It is no unfrequent thing, though, in vertical engines, to find the pump worked by a connecting-rod and trunk as in paddle-wheel engines, the motion being derived from levers worked from the piston-rod crosshead in the same way as for pumps with fixed rods.

The arrangement of the pumps is various as regards detail, but for vertical screw engines is generally alike in principle, and may be divided into three systems,—(1.) Air-pump and circulating pump, both single-acting, and each worked separately by levers, &c., from each piston-rod crosshead; or air-pump and circulating pump side by side (the latter being either single or double acting), and worked by levers from one piston-rod crosshead; or a single-acting plunger circulating pump inverted over the air-pump, and having a common rod, crosshead, levers, &c.; (2.) air-pump and circulating pump worked from each piston direct, or from the same piston-rod crosshead; (3.) both pumps worked by eccentrics on the crank-shaft, or by a crank-pin on the forward end of the crank-shaft.

The first system is the one most generally adopted, the others being a speciality of comparatively few engineers.

When the two pumps are worked independently, and are so arranged that in cases of emergency either can be used as an air-pump, the chances of breakdown are materially decreased; like-

wise the strain from the pumps is distributed, and their weight tends to balance the piston; but *per contra* the expense of working parts is increased, and the number of parts requiring attention and liable to accident is doubled; more space is required, and the condenser must lie between them, or between them and the crank-shaft, in any case occupying more room; also, in the case of compound engines the low-pressure piston requires the greater counterbalance, so that it is an advantage to have both pumps worked from it. The body of the pumps made in this way is often formed with the columns, but it is not a very good plan, as when rusted away so as to require renewal, the cost is very great.

If the two pumps are side by side their rods are connected to a common crosshead, &c., thus leaving the space on the forward or after side of them free for the condenser, and admitting of more elasticity in its design; and, as is generally the case, the pumps are worked from the after cylinder, the condenser is easy of access, and there is plenty of space for the tubes to be drawn in a fore and aft direction. The channels forming the connection with the pumps and condenser are generally cast with the engine foundation, and the foot-valve fitted into them.

The circulating pump inverted over the air-pump is a very convenient arrangement for small engines; but as the strains from the circulating pump have to be taken by the stand pipes from the pumps and the condenser top, it is found to give trouble in large engines: also, when the ship is light, and the valves out of order, it fails to pump well; but a large amount of space is saved by this plan, and it was at one time very frequently found in small ships.

Horizontal Pumps.—In the horizontal engine the air-pump was almost invariably worked direct from one of the pistons, although occasionally it was found more convenient to obtain the motion from one of the piston-rods of double-rod engines by means of a bracket or arm keyed to it; in either case the stroke of the pump is the same as that of the engine.

The air-pumps of horizontal engines are now often of the vertical type, single-acting.

The horizontal pump is nearly always double-acting, about the only case of a single-acting pump being that of Messrs. R. Napier & Sons in their old engines, when the pump-plunger formed a trunk in which the connecting-rod worked.

There are two forms of double-acting pump now in general use, one being an ordinary piston of brass, packed with hemp gasket, working in a brass barrel, fitted in the condenser, and the other a hollow-plunger working through a brass stuffing-box, &c., fitted in the division-plate between the back and front sets of valves.

The advantages of the latter plan are, (1.) more room is given for the valves (as the seats can be continued as far as the division-plate), without causing a large space between the head and foot

valves. (2.) The condenser-bottom or pump-box does not require to be bored out, as the stuffing-box can be easily fitted; while, in the former plan, the space for the pump-liner has to be bored out, and the liner turned to fit it, and afterwards secured in place. (3.) The plunger will be about the same weight as the liner, thereby costing about the same from the foundry; but the work on it is principally plain turning, which is both cheaper and easier than boring, as in the case of the liner. (4.) The packing can be renewed without disturbing the pump. On the other hand, the weight to be moved in the case of the plunger is greater than that of the piston-bucket (although it is sometimes supported by the water), and, in consequence, besides requiring more work to drive it, the wear is considerably more, so that in course of time it drops *out of line*, and is difficult to keep tight; the plunger also requires more room at the back and front of the condenser for its removal, which in small ships is often a serious consideration. Therefore, on the whole, the plunger system is the cheapest and easiest of design, while the piston-bucket works best, and is most convenient for examination.

The piston-buckets are made of brass or gun-metal (in one thickness generally), stiffened by from 4 to 8 ribs; the circumference is either recessed down, so as to admit of gasket being coiled around it, or else it is formed like a stuffing-box, and fitted with a gland or junk-ring, secured by studs and nuts, which pass through lugs cast with it, so as to jam the packing tight after it has been placed in.

The Admiralty now, however, always specify the condenser and pumps to be wholly of brass.

Air-pumps are sometimes fitted with spring rings and junk-rings, similar to those of a steam-piston, but made of gun-metal instead of cast-iron; this, however, has been but rarely done, and then only in very large pumps, as in ordinary cases hemp packing serves the purpose very well, and is much cheaper. Vertical pumps will work well without packing.

The diameter of the horizontal air-pump rod = ·15 × diameter of the pump + $\frac{1}{4}$ inch.

The rods working in the pump are of gun-metal or Muntz metal; the Admiralty now prefer the former or rolled bronze, and have therefore struck the latter out of their specifications as being too soft for continued wear. When the rods are of large size, they are sometimes made of wrought iron, cased with gun-metal, but unless the rods are large and long, it does not pay to case them.

The rod fitting into the steam-piston is, of course, of wrought iron, and is connected to the brass rod by a box-coupling and cotters, the socket being formed with the iron rod, in order that the piston-bucket may be drawn out from behind for examination without removing the rod.

The pump rod is usually fitted into the bucket in a similar manner to that of a piston-rod, the taper at the end being about 1 in 12.

Pump Buckets.—The following rules give the dimensions of an ordinary pump-bucket, of which fig. 65 is an example :—

$$x = 0{\cdot}3 \times \sqrt[4]{D} + 0{\cdot}15 \text{ inch.}$$

D is the diameter of the pump in inches.

The thickness of the disc when solid	$= 1{\cdot}0 \times x$
,, ,, ,, perforated	$= 1{\cdot}7 \times x$
,, ,, flanges at edge	$= 1{\cdot}1 \times x$
,, ,, metal around rod end	$= 1{\cdot}5 \times x$
,, ,, ,, the rim	$= 1{\cdot}0 \times x$
,, ,, packing	$= 1{\cdot}1 \times x$
,, ,, ribs	$= 0{\cdot}8 \times x$
The breadth of the packing	$= 4{\cdot}0 \times x$
,, depth of bucket at the middle	$= 6{\cdot}0 \times x$

,, number of ribs, one for each 4 inches of diameter.

The bronze liner is usually from $\frac{1}{2}$ inch to $\frac{7}{8}$ inch thick, or its thickness $= 1{\cdot}1\,x - 0{\cdot}2$ inch.

This liner is let into the cast-iron bottom, and made to fit tight at both ends, facings on both liner and bottom being formed for that purpose; these facings are made with a very slight taper, so as to allow of a little *draw* on fitting in; the liner is then secured by brass screws passing through and through. The pump-barrels of vertical pumps are usually of bronze, $\frac{5}{8}$ to 1 inch thick, secured to the foundation or pump bottom by flanges cast with them; the *head* valve-boxes, &c., are also borne on them, and secured by flanges in a similar manner.

Pump Valves.—The arrangement of the valves of an air-pump is of the highest importance, for, as has been stated, the efficiency of the pump to a very large degree depends on it; especially is this the case with compound engines, where but a small amount of water is pumped at each stroke. Compound engines indicating 2000 horse-power use about 10 cubic feet of water per minute, so that for a double-acting pump, with 100 revolutions of the engine, the amount per stroke is only 86·4 cubic inches; in practice, however, the pump fails frequently to take this amount, and so, until it accumulates behind the foot valves, no water enters the pump. Again, a double-acting pump is seldom so efficient at the front end as it is at the back, and, consequently, until there is a glut of water, the front ceases to pump. From causes of this kind trouble is often experienced with the double-acting pump of surface condensers, and a remedy that has answered very well indeed in obviating this is to connect the space between the valves to the hot-well by a pipe about ·15 the diameter of the pump, having a suction or non-return valve fitted to it, so that the pump is to some extent continuously charged with water.

There are certain conditions that should be most carefully observed in arranging the valves, and they are—

(1.) The foot valve should be in such a position that the water readily drains from the condenser into the pump.

(2.) The valves should be so designed as to open with the least possible pressure under them, and still readily close on the return stroke of the pump.

(3.) The flow from the condenser to the hot-well should be as direct as possible: that is, there should be as little change as possible in the direction, and no obstacles, so that the velocity generated at leaving the condenser should not be checked until the water is in the hot-well.

(4.) The space between the head and foot valves should be a minimum, and all recesses, &c., where air can lodge or eddies can form, should be avoided.

To drain the condenser efficiently, the foot valve should be below its lowest level, and, when possible, the channel from it to the pump inclined so that the water naturally flows in that direction; all stiffening ribs, &c., should be placed on the outside, so as to avoid gutters in which the water can lie.

The foot valves can only open by the pressure under them being greater than that on them, and when, as in the case of surface condensers, the head of water is not sufficient to do so, it depends entirely on the pump forming a better vacuum between the foot and head valves than there is in the condenser. Now, if there be a good vacuum in the condenser, it requires the full efficiency of the pump to produce a better one between the foot and head valves. At most there can be but very little difference between the pressure in the condenser and that in the pump-chamber, and if the valves have much resistance in themselves, they will cease to act. The full force of this is better appreciated when it is remembered that the pressure in the pump-chamber must vary from slightly above atmospheric pressure, when the head valves are opened, to below that in the condenser in order to open the foot valves. For this reason, if the space between the head and foot valves is more than one-fifteenth the capacity of the pump, it is impossible to obtain a good vacuum in the condenser. This clearance space is virtually reduced by filling it with water; without such virtual reduction very few horizontal air-pumps would be capable of maintaining over 20 to 22 inches of vacuum in the condenser.

The makers of the horizontal air-pump usually arrange the foot valves so that they are either on a vertical plane seating, or on one inclined so as to allow of the valves opening easily; some engineers even invert the foot valves so that the water on them causes them to open so soon as the pressure in the pump chamber equals that in the condenser. Messrs. John Penn & Son sometimes fit a brass box, having valves on five of its sides, and bolted to the condenser by the sixth, so as to cover the outlet orifice from the condenser to the pump. In this way the clearance space is partly filled, and

five valves can work in the space usually occupied by one; three of the valves are in vertical planes and open horizontally, the two others are in horizontal planes, one opening upward and one downward. Sometimes the inverted valve is adopted for foot valves; these valves (fig. 70) are of india-rubber, circular and round-backed, so as to close quickly and keep tight on their faces.

The head valves should also be carefully arranged, for although not so difficult to place as are the foot valves, a little want of forethought may cause a bad working pump. They should always be so arranged that water lodges on them, so that in case they leak only water, *and not air*, escapes back into the pump; the valve seats and parts adjacent should be free from pockets underneath in which air can collect, and for this purpose they should be in the highest part of the pump-chamber, and if any part is partitioned off by a stiffening web or fillet, a communication should be made from its top to the underside of the head valves.

Since mineral oil has been used as the lubricant for cylinders, ordinary india-rubber will not do for air-pump valves, owing to that oil being a solvent of the rubber. Many attempts have been made to manufacture a rubber which will withstand the oil, but none of them have been perfectly successful, and only a few have succeeded in preventing the rapid action noticeable on nearly pure rubber.

Vulcanite Valves.—India-rubber can, by a certain process, be converted into a hard black substance resembling ebony, and hence sometimes called *ebonite;* this substance is light and very strong, and quite impervious to oil, and has been used with great success for air-pump valves. The valves made of vulcanite (fig. 66) are generally circular and flat, strung on a stud through the middle, on which is a flat brass guard of the same diameter as the valve, and against which the valve lifts bodily. The wear of these valves is very little indeed.

Wooden Valves.—With the same object wooden valves have been tried, but not with the same success; the wood is not, as a rule, strong enough when light, and is destroyed by the combined action of the water and the blows on the seat.

Metallic Valves.—In the old days, the air-pump valves were usually of brass and of large size, the foot and delivery valves being hinged or "flap" valves, and the bucket valve annular. The flap valve is still employed where the foot valve is not accessible or easily got at, and answers the purpose very well indeed; it should be of ample size, and have very little lift.

Coe & Kinghorn's Patent (fig. 67) consists of tongues made of very thin rolled sheet phosphor bronze. These tongues or flaps cover a grating in the same way as india-rubber, and are fitted with curved guards to admit of a gradual bend. These valves work very well, but great care is necessary in making and setting the guard, so that when the valve is open there is no change of flexure or angle on which the flap can work and gradually break.

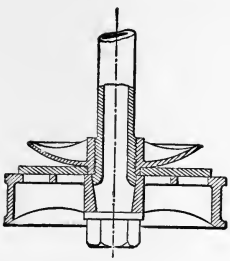

Fig. 65.

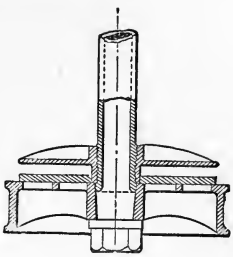

Fig. 66.

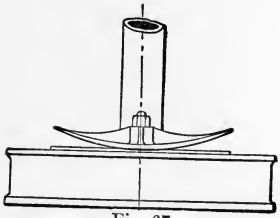

Fig. 67.

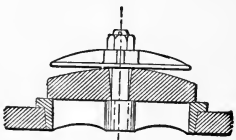

Fig. 70.

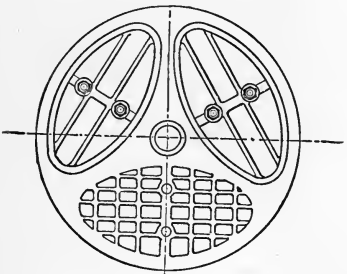

Fig. 69.

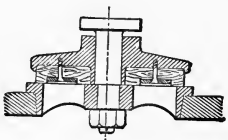

Fig. 71.

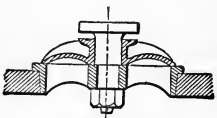

Fig. 68.

Figs. 65–71.—Air-Pump Buckets, Valves, &c.

Thompson's Patent (fig. 68).—A large number of small saucer-shaped valves, of phosphor or manganese bronze, cast very thin indeed, are sometimes fitted, and being very strong and comparatively light do the work very well. Simple discs of thin sheet-brass or bronze have also been used for this purpose with success. Thin discs of brass are often used; they are inexpensive and work very well. Discs of fibre also answer very well.

Area through Valve Seats.—The area of opening past the valves depends on the size and velocity of the pump, and should not be less than will admit the full quantity of water for jet condensation at a velocity not exceeding 400 feet per minute. In actual practice the area is generally in excess of this. If the foot valves are large they will be sluggish in action; if they are small the velocity of water, &c., will be sufficiently high to raise the valves and keep them open by the energy of the particles striking them; this argument especially applies to the pumps of surface condensers. It may be noted that the vertical pumps of the jet-condensing engines were frequently without foot valves.

If D be the diameter of the air-pump in inches, and S its speed in feet,

$$\text{Area through foot valves} = \frac{D^2 \times S}{1000} \text{ square inches.}$$

$$\text{Area through head valves} = \frac{D^2 \times S}{800} \text{ square inches.}$$

$$\text{Diameter of discharge pipe} = \frac{D}{35} \times \sqrt{S} \text{ inches.}$$

When the use of the "jet" is not required the area may be considerably less than given by this calculation.

If the pump is without an air vessel or receiver, as is often the case with double-acting pumps, the diameter of discharge pipe should be 10 per cent. larger.

An air-pipe should always be fitted to the hot-well, as high up as possible, and whose diameter should be $\frac{1}{4}$ that given above.

The bucket of a single-acting pump must be sufficiently large to admit of a valve area through it not less than given above for foot valves. To obtain this they are better designed with a short stroke. It is usual now and certainly advisable to deliver the water from the air-pump into a tank about 12 times the capacity of the pump; the delivery pipe is in diameter 0·7 that given above. The air-pipe should be about half the area in section. The tank should have an overflow pipe and a glass gauge. The suction for the feed pumps should be near the bottom and fitted with a strainer.

Circulating Pumps.—Two kinds of pumps are employed to circulate the cooling water in the condenser—the ordinary single- or double-acting reciprocating pump, and the rotary pump. The single-acting pump is usually fitted to small engines, and the double-acting to larger ones. The latter is preferable to the former—but more expensive. They are generally worked by the main engines, but sometimes by independent ones.

Single-Acting Pump.—This is used in vertical engines, and is similar to the single-acting air-pump already described. It works very well, and when provided with an efficient air-vessel the flow is fairly steady. In very small engines a plunger-pump is used, and formerly inverted plunger-pumps were fitted to engines of considerable power. A good pet-valve, which will admit air to the pump and not allow the water to pass out, should be fitted; and likewise a pass-cock, which opens a communication between the

delivery and suction, is a requisite; the former prevents noise by providing an air cushion for the water, and the latter checks the supply without straining the pump.

Double-acting Pumps.—These give a steadier flow of water, and cause less shock and strain on all the working parts, pipes, &c., than do the single-acting pumps; but even these should be fitted with pet-valves and pass-cocks. When a reciprocating pump is used for circulating water in a horizontal engine, it is always double-acting, for the same reason that the air-pump is so, and when this kind of pump is used for vertical engines of 150 N.H.P. and upwards, it should be double-acting.

Size of Circulating Pump.—The capacity of this pump depends on the quantity of cooling water and the number of strokes per minute.

Let Q be the quantity of cooling water in cubic feet, and n the number of strokes per minute, and S the length of stroke in feet.

$$\text{Capacity of circulating pump} = \frac{Q}{n} \text{ cubic feet.}$$

$$\text{Diameter} \quad \text{,,} \quad \text{,,} \quad = 13{\cdot}55 \sqrt{\frac{Q}{n \times S}} \text{ inches.}$$

Example.—To find the diameter of a double-acting circulating pump of an engine condensing 2 cubic feet of water per minute, and requiring 40 times the amount of cooling water; the stroke of the pump is 18 inches, and the number of revolutions 120 per minute.

Here

$$Q = 40 \times 2 \text{ or } 80 \text{ cubic feet}; \; n = 120 \times 2 \text{ or } 240.$$

$$\text{Diameter of pump} = 13{\cdot}55 \sqrt{\frac{80}{240 \times 1{\cdot}5}} = 6{\cdot}4 \text{ inches.}$$

The size of the circulating pump is to a large extent dependent on the same conditions that determine the size of the air-pump, and may therefore bear a constant relation to the size of the air-pump; and since the size of the air-pump is often determined by the size of the cylinders, that of the circulating pump may be found in a similar manner. When the air-pump is *single-acting*, the capacity of the *single-acting* circulating pump should be 0·6 of that of the air-pump, and when the circulating pump is *double-acting*, 0·31.

When the air-pump is *double-acting*, the capacity of the *double-acting* circulating pump should be 0·52 of that of the air-pump, the double-acting circulating pump being more efficient than the double-acting air-pump.

The following table gives the ratio of capacity of cylinder or cylinders to that of the circulating pump.

TABLE XVI.

Description of Pump.	Description of Engine.	Ratio.
Single-acting, .	Expansive 1½ to 2 times, . . .	13 to 16
,, ,, .	,, 3 to 5 ,, . . .	20 to 25
,, ,, .	Compound, ...	25 to 30
Double- ,, .	Expansive 1½ to 2 times, . . .	25 to 30
,, ,, .	,, 3 to 5 ,, . . .	36 to 46
,, ,, .	Compound, ...	46 to 56
,, ,, .	Triple and Quadruple Compound, .	56 to 64

Circulating Pump Rods are made of the same materials, and in the same way as for the air-pump, and when possible the rods of both pumps are made identically alike, so that one spare rod serves for both.

Diameter of circulating pump rod = 0·22 × diameter of pump.

When the pump is double-acting, or of comparatively long stroke 0·22 × diameter of pump + ¼ inch.

Circulating Pump Bucket.—When single-acting it is similar to that of the air-pump, and when double-acting it is simply a piston of brass.

Although it is usual to pack these pumps with hemp gasket or bronze rings, there is no necessity for this, since the water flows freely into the pump by gravity, and the pump moves too quickly to allow of much leakage past the piston. Many engineers now dispense with packing, and simply make the piston a fairly good fit in the barrel; while others turn either a spiral groove, or a series of parallel grooves, on the edge of the piston, which has the effect of keeping the surface well lubricated and preventing leakage *when working*. The friction of the unpacked pump is considerably less than that of a packed one, and in fast-running engines this is no slight consideration. It may be taken now as certain that it is better not to pack the circulating pump of a fast-working screw engine, and packing is of doubtful advantage when the engine is slow-working, provided the pump is below the water-line.

Since brass and lignum vitæ work well together when lubricated with water, the piston of the circulating pump is sometimes fitted with a lignum vitæ ring, composed of several pieces let into a dovetail groove. To allow for the expansion of the wood, the piston should be a slack fit when put into place new.

Circulating Pump Valves.—These are almost always of the best india-rubber, and of the quality known as 'floating,' from the fact of the specific gravity of rubber, with only such slight admixture of foreign matter as to render it usable, being less than that of water.

Valve Area.—The clear area through the valve seats and past the valves should be such that the mean velocity of flow does not exceed 450 feet per minute. It is not always easy to obtain so large an area, but when the velocity of flow is high the valves wear out more quickly, and the resistance of the pump is considerable, so that every effort should be made in this direction.

The pipes should be of such a size that the mean velocity of flow through them does not exceed 500 feet per minute when comparatively small, and long for their size; when large, and having fairly easy leads, the allowance may be as much as 600 feet. The suction pipe of a double-acting pump should be of the same size as the delivery pipe, but it may be considerably smaller when the pump is single-acting and below the water-level.

Let A be the area of the pump, D its diameter in inches, S the mean speed of movement in feet per minute, then

$$\text{Area past the valves not less than } \frac{A \times S}{450}.$$

$$\text{Diameter of pipes} = \frac{D}{F}\sqrt{S}.$$

Suction pipe of small double-acting pump,				.	$F = 22.$
Delivery	,,	,,	,,	.	$F = 23.$
Suction	,,	large	,,	.	$F = 24.$
Delivery	,,	,,	,,	.	$F = 25.$
Suction	,,	small single-acting	,,	.	$F = 26.$
Delivery	,,	,,	,,	.	$F = 22.$
Suction	,,	large	,,	.	$F = 27.$
Delivery	,,	,,	,,	.	$F = 24.$

Both kinds of pumps should have air-vessels, and the single-acting pump should have one twice the capacity of the pump when possible, and never less than one-and-a-half times its capacity. When the water is *pumped through* the tubes, the doors of the condenser may be made with pockets, which serve as air-vessels in forming a cushion. Air-pipes should be fitted to the highest points of the waterways, when the water is pumped into the condenser, to allow the air to escape, so that it may run full, and always allow water to be in contact with the tubes.

Rotary Pumps.—There are one or two forms of rotary pump which have been tried for the purpose of circulating the cooling water, but only the centrifugal pump has, so far, achieved perfect success.

The advantages of the rotary pump are—

(1.) There are no valves, &c., to interfere with the flow of water, or to get out of order.

(2.) Being easily worked by an independent engine of small size, it is usually so provided, and can be then started before the main

engines are moved, and so keep the condenser cool during the process of "warming through" the cylinders, &c., and also while standing.

(3.) Having this independent engine, the supply of cooling water is varied to suit the varying circumstances, and the power required to work the pump varies then with the quantity of water.

(4.) The efficiency for low lifts is greater than that of a reciprocating pump.

(5.) The supply of water is continuous, and enters the condenser without shock, thereby putting no strain on the castings, pipes, &c., beyond that due to the "head."

(6.) It is easily placed in the engine-room, and the absence of a reciprocating pump worked by the engine, especially in a horizontal engine, admits of a better design and arrangement of condenser and air-pump.

On the other hand, the centrifugal pump is somewhat more expensive than an ordinary pump, and requires more attention when at work; the latter objection is, however, now considerably lessened, although only by increasing the former.

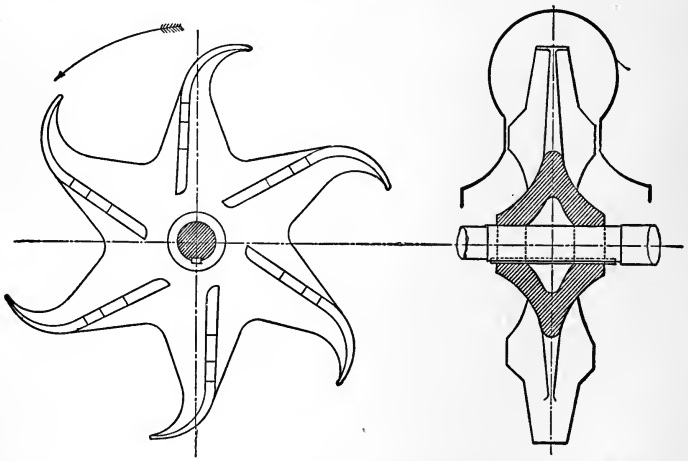

Fig. 72.—Wheel of a Centrifugal Pump.

Centrifugal Pump.—This essentially consists of a wheel (fig. 72) having thin vanes as arms, which act on the water so as to give it a circular motion in a cylindrical case enclosing the wheel: this case is provided with an enlarged chamber around it, into which the water from the wheel is whirled, and from which it escapes through a branch tangential to it.

The principle on which this pump works is, that a particle moving in a circular path is under the action of two forces, one tangential,

and the other normal to its path, or at right angles to the tangential one; when this latter force ceases to act, the particle moves away in a path tangential to the circle at the point where the retaining force ceased to act. In the centrifugal pump, the particles of water flowing into the centre of the pump are gradually put into motion and whirled round until, after a spiral course, they arrive in the outer channel, and there are retained in a circular course till they reach the outlet, where the retaining or normal force ceases, and they fly away tangentially through the outlet. The vanes of the wheel are sometimes enclosed between two discs of thin metal, to which they are attached, or they fit closely to the sides of the case in which they work.

Experience has shown that the best form of wheel is one whose vanes are sickle-shaped, as shown in fig. 54, and there is less resistance if the vanes fit the pump-case instead of having the enclosing discs, inasmuch as these latter have considerable friction on their surfaces, especially on that next the pump-case.

The outer passage, or *whirl chamber*, is usually formed like a snail, so that its sectional area gradually increases from nearly nothing to the full area of the discharge pipe.

The inlet pipe leads from the outer rim to the centre of the pump, having a passage on either side, so that the water is delivered on both sides of the wheel. For convenience these pumps are sometimes designed now with the inlet at one side only.

The diameter of the inlet and outlet pipes of a centrifugal pump for circulating purposes, should be such that the velocity of flow does not exceed 400 feet per minute. Hence, if W is the quantity of water in gallons per minute,

$$\text{Diameter of pipes in inches} = \sqrt{\frac{W}{13{\cdot}7}}$$

For triple and quadruple engines the following rule gives ample size:—

$$\text{Diameter of pipe in inches} = \sqrt{\frac{\text{I.H.P.}}{20}}$$

The diameter of the fan-wheel is usually from $2\frac{1}{2}$ to 3 times that of the pipes, and always is such that the speed at its periphery at full speed is in excess of 400 feet per minute, and generally from 450 to 500 feet. Hence, if R be the number of revolutions of the fan-wheel per minute, and d its diameter,

$$\text{The diameter in inches must not be less than } \frac{1{,}700}{R}$$

$$\text{Breadth of blade at tip} = \frac{W}{30\,d}$$

The blades are curved as shown, that the water on entry may be gradually set into circular motion, and caused to flow into the whirl chamber with as little force as possible, and to leave the fan also gently.

The size of the cylinder for driving the fan can be calculated from the usual conditions; in practice its diameter is generally $2{\cdot}8\sqrt{\text{diameter of pipes}}$, and its stroke 0·28 the diameter of the fan.*

* Large pumps should have compound engines with a low-pressure cylinder of the size thus calculated; the high-pressure cylinder should be half the diameter when the boiler pressure is 120 lbs. and upwards.

The fan should be always of bronze, and made as thin as possible in the blades; the spindle should be of bronze or steel cased with gun-metal.

As these pumps are sometimes required to pump out the bilges and ballast tanks, it is usual to fit some means of exhausting the wheel-case of air, so as to cause the water to flow up into it, as the fan has no sucking power, and will not draw until charged with water. Messrs. J. & H. Gwynne usually fit a small rotary exhauster, worked by means of a belt from the spindle; and other makers of these pumps fit a small steam-ejector on the same principle as Rodgers' vacuum blower. When no such special means is provided, the pump may be charged from the sea, and the sea inlet left slightly open until the pump begins to draw from the bilge or tanks.

Brotherhood's Pump.—In this pump a fan or paddle, having its axis vertical, works in a cylindrical case, having a spiral channel around it; the water is whirled into this channel, and the spiral plane raises it to the outlet pipe. This was tried on one or two occasions with only partial success, owing to the difficulty of lubricating the footstep of the spindle. The pump is also far more cumbersome than the ordinary centrifugal, and cannot be so easily arranged in an engine-room.

Feed-Pumps.—The duty of the feed-pump is to supply the boiler with sufficient water to meet its wants. It is supplied from the hot-well, so that when there is a surface condenser its supply is fresh water, and the amount, under ordinary circumstances, is the same as that evaporated in the boiler; but owing to leakage and waste by blowing the steam whistle, or using an auxiliary engine which exhausts into the air, the quantity of water condensed is not always sufficient to make up for that evaporated. It is found necessary also occasionally to blow some of the water out of the boiler, to get rid of scum floating on the surface of the water, and this waste must be made good by a supply from the sea or elsewhere. The water from a jet condenser is very nearly as salt as sea-water, and this, on being evaporated in the boiler, leaves behind the salt, &c., so that unless some precautions were taken the boiler would in time become filled with solid matter. To prevent such a large deposit of salt, &c., in the boiler, it was customary to blow out some of the very dense water from the boiler at fixed intervals, and as the blow-off cock was situated near the bottom of the boiler a considerable amount of solid matter was thus got rid of; the quantity of water blown out was made up by an extra supply from the hot-well. Now, since the surface condenser may leak, or an accident may happen, whereby jet condensation has to be resorted to, the pumps of engines fitted with surface condensers must be sufficiently large to do duty under such circumstances, or recourse must be had to a donkey pump.

Sea-water contains about $\frac{1}{32}$ of its weight of solid matter* in solution; its density is measured by a hydrometer, which in the Navy

* On the British coasts the sea-water contains only about $\frac{1}{40}$ of its weight of solid matter in solution.

is marked with degrees, so that when floating in pure water the zero point is at the surface, and when in clean sea-water it marks 10°. In the merchant service, engineers are accustomed to speak of the density by the number of ounces of solid matter to the gallon, sea-water containing 5 ounces to the gallon.

Gross Feed-Water.—To find the gross amount of feed-water, it must be decided to what degree of saltness the water in the boiler may be safely worked. The amount of scale or salt deposited on the surface of the boiler *does not depend on the density of the water*, but *only on the quantity of sea-water pumped into the boiler;* the boiler of a surface-condensing engine may be worked with perfect safety and with economy when the water is four times the density of sea-water, when the naval hydrometer registers 40° and the mercantile 20 ounces; indeed, the Boiler Committee appointed by the Admiralty in 1873 recommend such boilers to be worked at 45°, and those of jet-condensing at 35°.

Net Feed-Water.—The net feed-water is that quantity required to make up for what has been used as steam in the engine; let this be denoted by Q; let n be the number of times the saltness of the water in the boiler is to that of sea-water, then

$$\text{The gross feed-water} = \frac{n}{n-1} \times \text{Q}.$$

This is the amount of feed-water which must be pumped into the boiler when salt water only is used, to maintain the saltness of n times that of the sea.

If the pumps were only of sufficient size to pump this amount of water, a considerable time would elapse before the boiler would be filled to the working level after "blowing off;" to meet this objection it is usual to make *each* feed-pump capable of pumping twice this quantity, therefore

$$\text{Quantity of water for each pump to supply} = \frac{2n}{n-1} \times \text{Q}.$$

Example.—An engine condenses 2 cubic feet of water per minute in a jet condenser, the stroke of the feed-pump is 18 inches, and the number of strokes 120 per minute. The density of the water in the boiler is not to exceed $\frac{3}{32}$ (30°, or 15 ounces to the gallon).

$$\text{Here the gross feed-water} = \frac{3}{3-1} \times 2 = 3 \text{ cubic feet.}$$

$$\text{The quantity of water to be pumped} = \frac{2 \times 3}{3-1} \times 2 = 6 \text{ cubic feet.}$$

$$\text{The capacity of the pump} = \frac{6}{120}, \text{ or } 0{\cdot}05 \text{ cubic foot.}$$

And since the stroke is 1·5 feet—

$$\text{Area of plunger} = 0{\cdot}05 \div 1{\cdot}5 = 0{\cdot}0333 \text{ square foot}$$

$$= 0{\cdot}0333 \times 144, \text{ or } 4{\cdot}8 \text{ square inches.}$$

Therefore, diameter of plunger is 2·5 inches.

Since a surface condenser supplies pure water for feeding the boiler, and there is not the same need for blowing off the boilers, the feed-pumps may be very much smaller than when jet condensation is practised, and are generally of such a size that *each* is capable of delivering three times the *net feed-water*, assuming them to have an efficiency of 1·0; the pumps, when both are working, can then deliver six times the net feed, which is sufficient to satisfy the demands should jet condensation become necessary.

If Q be the quantity of net feed-water in cubic feet, l the length of stroke of feed-pump in feet, and n the number of strokes per minute,

$$\text{Diameter of each feed-pump plunger in inches} = \sqrt{\frac{550 \times Q}{n \times l}}.$$

If W be the net feed-water in pounds—

$$\text{Diameter of each feed-pump plunger in inches} = \sqrt{\frac{8{\cdot}9 \times W}{n \times l}}.$$

The following empirical formula will give such sizes as will be found in practice, and which will closely approximate to those given by the above rule:—

$$\text{Capacity of each feed-pump} = \frac{\text{capacity of cylinder}}{C}.$$

The following are the values of C when the engine is surface-condensing:—

Terminal pressure under 25 lbs., ...	C = 220.
„ „ 20 lbs., ...	C = 250.
„ „ 15 lbs., ...	C = 320.
„ „ 12½ lbs., ...	C = 380.
„ „ 10 lbs., ...	C = 440.
Compound engines generally (taking L.P. cylinder only),	C = 400.

The net feed-water in cubic feet per stroke is approximately = area of piston in inches × stroke in feet × absolute pressure at release ÷ 3,125,000; or,

Net feed-water in pounds per stroke approximately = area of piston in inches × stroke in feet × absolute pressure at release ÷ 50,000.

Example.—To find the net feed-water in cubic feet for an engine whose cylinder is 50 ins. diameter, and length of stroke 2 ft., the pressure at release being 12 lbs., and the revolutions 100 per minute.

$$\text{Net feed-water } \textit{per minute} = 200 \times \frac{1963 \times 2 \times 12}{3{,}125{,}000} = 3{\cdot}01.$$

All engines over 80 N.H.P. should have two feed-pumps, each capable of supplying the boilers when the engines are at full speed; and each pump should be so arranged that it may be worked quite independently of the other, and easily put out of action when not required. This latter condition is seldom complied with in practice; but if it were so there would be then a spare pump, and only one in danger of derangement when the engine is at work.

In the horizontal engine the pumps are worked either from the crosshead, or direct from the piston, by means of a rod, consequently they have the same stroke as the piston; the former plan is preferable as being cheaper, and avoiding an additional stuffing-box in the cylinder. The feed-pumps of vertical engines are usually moved by the same parts which move the air and circulating pumps. They are sometimes fixed to the crosshead of these latter pumps, and sometimes driven from studs in the sides of the rocking levers. When there is only one set of rocking levers this latter plan should be adopted; for by placing one pump on each side of the lever centre they deliver alternately, and give a steady flow of water. In the Navy, the use of feed-pumps worked by the main engines is entirely discontinued, and in the mercantile marine it is fast becoming the practice, especially in large ships, to feed the boilers by an independent pump, and generally a self-regulating one.

Relief Valves should be fitted to each pump, when they are so arranged that each may work separately; when they both deliver into a common pipe, one relief valve is sufficient; it should be loaded to $1\frac{1}{2}$ times the boiler pressure.

Valves and Valve-Boxes should be always of bronze; and since the seats as well as the valves wear out rapidly, they should be made separately from the box casting. The valves should have a seating area equal at least to 20 per cent. of the valve, and it is better to make them flat rather than conical. Some engineers use brass balls fitting into conical seats; since they are constantly changing their position on the seats these balls wear very slightly and keep very tight. When the boiler pressure did not exceed 30 lbs., the valves of the feed-pumps (fig. 70) were usually made of india-rubber; and American engineers still employ this material notwithstanding the increased pressure. If the rubber is thick and capable of withstanding the action of mineral oil, no doubt it will work well; but so much reliance cannot be placed on it as on the metal.

Bronze valves (fig. 69) make a noise when working, owing to the quick return to their seats on the pump ceasing to deliver; attempts have been made to reduce the noise and wear by facing the valves with hard wood. Boxwood, when properly fitted (fig. 71) works very well, but unless carefully attended to, is liable to derangement.

The noise of the valves may be stopped by loading them with light springs made of steel and plated, or of hard brass.

Air-Vessels.—Each pump should be furnished with an air-vessel, which may serve the double purpose of providing a cushion, and collecting the free air from the feed-water, which is the active agent in producing corrosion when admitted to the boiler. To increase its usefulness in the latter capacity, a fine grating should be fitted to the inlet orifice, which will "spray" the water, and so separate the air, and a relief valve should be fitted to the top of the vessel, loaded to a pressure slightly below that obtaining when the pump is delivering at its maximum rate, but arranged to close when the vessel is nearly full of *water*. Air-vessels, however, are practically useless with the high pressures of steam now employed, except as a means of getting rid of gases and air.

Feed-Pipes.—The pipes leading to and from the feed-pumps should be such that the velocity of flow does not exceed 500 feet per minute, and small pumps should have larger pipes in proportion, so that the flow through them does not exceed 400 feet.

Since the amount of water actually flowing through the pipes is generally very considerably less than the pumps are capable of discharging, the velocity is seldom more than half the above allowances; but as the pumps do occasionally deliver their full amount, the pipes must be large enough for that purpose.

If d is the diameter of the feed-pump plunger, and s its mean velocity in feet per minute, then

$$\text{Diameter of feed-pipe} = \frac{d}{20}\sqrt{s} \text{ for small pumps.}$$

and

$$\text{Diameter of feed-pipe} = \frac{d}{23}\sqrt{s} \text{ for large pumps.}$$

Example.—To find the diameter of the feed-pipes for a pump whose diameter is 6 inches, and the length of stroke 2 feet, worked from the levers of an engine, making 60 revolutions per minute. Here $s = 2 \times 60 \times 2$, or 240 feet.

$$\text{Diameter of pipe} = \frac{6}{23}\sqrt{240}, \text{ or 4 inches.}$$

If there are two pumps which deliver alternately, the pipes will be the same size throughout; but if the two pumps *may* deliver at the same time, the pipe beyond the junction of the two from the pumps must be nearly double the sectional area of one. As the resistance of pipes is due greatly to friction at the surface, and will consequently vary as the diameter, while the area of section varies as the square of the diameter, the resistance in the single pipe will be considerably less than the combined resistance in the two, and for this reason its sectional area may be less. In practice this area may be 0·8 of the combined area of the two. Hence, when there are two pumps delivering together:

Diameter of main pipe = 1·265 × diameter of branches.

If there were two pumps, as in the last example, delivering together, the diameter of the main pipe would be $4 \times 1{\cdot}265$, or 5·06 inches.

"Pet Valves."—Although it is prejudicial to admit air to the feed-water, it is necessary for the good working of the pumps to allow a little air to enter between the valves to form a cushion. For this purpose "pet" valves are usually fitted. They should be so arranged as to draw air from the hot-well, but also be capable of drawing from outside, so that the engineer may ascertain when the pump is working, and if not, to coax it to do so by allowing it to suck water through the pet valve and so charge it with water.

Feed Tank.—To avoid any waste of water through the overflow or air-pipe of the hot-well when the feed-pumps are temporarily stopped, it is the rule in the Navy to provide a tank, into which the water is discharged from the hot-well, and from which the feed-pumps draw. Such an arrangement is very beneficial in all engines, and especially in those having small hot-wells.

Feed-Pump Rod.—This is of iron, and, in the case of hollow plunger pumps worked from a pin having a circular motion, it is jointed within the pump. As the plungers of vertical pumps are seldom without water in them and difficult to empty, the joint should be such as will work with water as a lubricant. This is accomplished by bushing the joint with lignum vitæ, and casing the pins with brass; or white-metal (Fenton's) bushes, with iron pins, will do. The rod-end within the pump should be galvanised, as otherwise it often becomes severely corroded.

When the rod is long and of iron, p being the boiler pressure,

$$\text{Diameter of feed-pump rod} = \frac{\text{diameter of plunger}}{40} \times \sqrt{p} + 0{\cdot}6.$$

If of brass, divide by 35 instead of 40.

When the rods are short, the diameter may be 0·7 of that given by the above rules.

The plungers, valve-boxes, and valves are always of best bronze, and the Admiralty require the pump-barrel or case to be of bronze, but in the merchant service this is generally of cast iron. The same remark applies to the air-vessels, escape-valves, &c. The capacity of the air-vessel should be from 1·5 to $2 \times$ the capacity of the pump.

Bilge Pumps.—These pumps, which are for the purpose of freeing the bilge of water, are somewhat similar in construction and method of working to the feed-pumps, and in engines with jet condensers are of the same size; since smaller feed-pumps are required with surface condensation, this old rule does not hold good. There is no basis of calculation for the size of these pumps, and it is generally at the caprice of individual engineers, many of whom still adhere to

the old practice of making them of the same size as the feed-pump. They may be, however, made to the following rule with advantage:—

$$\text{Capacity of bilge pump} = \frac{\text{capacity of cylinder}}{350}.$$

The plungers are usually of bronze, but in the merchant service are often of cast iron, and as this is harder, especially when the hard skin is formed by rubbing, they wear longer when of this material. When of cast iron, the neck and gland bushes should be of Fenton's metal, to prevent corrosion when not at work.

In the mercantile marine, the valve-boxes are of cast iron, and the valves usually hinged "clacks," capable of easy removal for cleaning. The covers of these boxes should be so made that they may be easily and quickly removed and replaced, and for that purpose are sometimes hinged, and, better still, held down by two hinged bolts fitting into recesses in the cover.

The Board of Trade requires that one bilge pump shall be arranged to draw water from the sea, and pump it on deck in case of fire. When this is done, the suction pipes should be fitted with a three-way cock, whose plug has only one port, so that it cannot be open to the sea and bilge at the same time, and so flood the ship. When the pipes are very large, it is not always convenient to fit a cock; but a double valve-box with self-acting non-return valves is substituted; when possible, the cock is the better and safer plan.

Directing Boxes.—It is required that the bilge pumps shall draw from each compartment of the ship. For this purpose, the suction from the pump is connected to the top of a box containing a series of valves by opening any one of which a communication is made to a separate compartment; the cover of each valve should have on it a label signifying to which compartment the valve opens a communication. These directing boxes should be placed in such a position, that they are easily got at, and above the floor plating when possible.

Mud Boxes.—Between the directing box and the pump should be fitted a box with a strainer, which shall intercept such solid matter as would derange the pump valves, if allowed to enter among them. They should have covers similar to those of the pump valve-boxes, and placed in such a position as to be easily got at.

Sanitary Pump.—In passenger steamers, it is usual to have a pump of about a half or one-third the capacity of the bilge pump, which can be put into gear, and worked by the engines, to discharge water on deck for sanitary purposes.

Hand Pump.—A pump arranged to be worked by manual labour, is usually fitted in all but very small ships, for the purpose of filling the boilers, clearing out the bilges, and pumping water to clean the decks when steam is not up. It is a good, and now not uncommon thing to arrange it, that it may be worked by the engines, as it then becomes a reserve feed-pump in case of accident to the others, and

may be used instead of the donkey for extra supply in case of priming or "blowing off." As a means of feeding the boilers by hand when under steam it is now quite useless.

The Admiralty used to require that the hand-pump may be worked by the engines. This can be effected by having a stud in a sliding block, on the end of the shaft, or on the levers of vertical engines; the sliding block is operated by a screw, so that it may be moved from the centre where there is no motion, to a point which will give the stroke required. The connecting-rod may have a gab to take the pin, or be permanently attached to the pin and made telescopic, with a cotter or set screw to secure it when required to work the pump.

The valves of the sanitary and hand pumps should be similar to those of the bilge-pumps.

CHAPTER XIII.

VALVES AND VALVE-GEAR.

STEAM was admitted to and released from the cylinders of the early land engines by means of conical valves, operated by tappet gear in such a way that the steam-valve was suddenly opened and as suddenly closed at the proper times, and the valve which allowed the steam to escape to the condensers and closed before steam was admitted worked with the same precision and by the same methods. Such an arrangement permits of a high state of efficiency for the steam, but is open to the objection that motion so sudden is liable to cause much wear and tear of the working parts. In those early days the pressure of steam was only a little above that of the atmosphere, and the number of strokes per minute comparatively few, so that leakage past the valves and the wear of the tappet gear was not so great as might be expected; and, on the whole, the early engineers had every reason to be satisfied with their valve-gear.

That such gear can be made to work well and give general satisfaction is evident from the fact that it is still employed in large pumping engines, which work at 60 lbs. pressure, and move at much higher speeds than formerly obtained.

Modifications of this form of valve and valve-gearing have been adopted for marine purposes, but not with that degree of success, at least in this country, as to commend themselves to engineers for extended adoption. In America, however, they are very generally employed for marine engines, and most successfully so in the large beam engines of river and lake steamers.

Such gearing was impossible in the locomotive engine on many grounds, so that an entirely different valve was adopted to suit it. This valve differed from previous valves in many ways, but chiefly

in respect to its motion, which was a sliding one. From it this form of valve is called a *slide*-valve, and frequently, when in its simple form, *the locomotive slide-valve*, to distinguish it from the long and short D valves, employed so generally in early paddle-wheel engines, which also had a sliding motion.

The locomotive slide-valve (fig. 74), in its simple and extended forms, is the one most generally used in the marine engine. It essentially consists of a rectangular block having a central cavity, the flat bars between the outer edge at each end and the central cavity being sufficiently broad to cover the cylinder ports, and when in its mean position both ports are covered. The amount by which the outer edges overlap the ports when in the mean position is called the *lap*, and the amount by which the valve is open when the piston is at the commencement of its stroke is called the *lead*; the space through which the valve is moved during a revolution of the engine is called the *travel*. The amount by which the inside edges of the valve overlap the port is called the *inside lap*, and when, as often happens, instead of overlapping inside, the port is slightly open to the cavity of the valve, the valve is said to have *negative inside lap*.

The early locomotives made by Stephenson had little or no lap and little or no lead. Timothy Hackworth, by giving the valves lead and lap, effected an earlier cut-off, and consequently obtained expansion of the steam, thereby saving the locomotive from threatened failure, and making it a commercial success. The effects of *lead* and *lap* will, however, be shown later on.

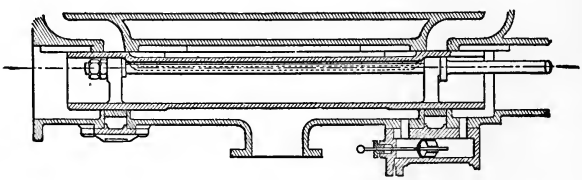

Fig. 73.—Long D Slide-Valve.

The Long and Short D Valves spoken of are slide-valves whose cross-section is shaped like that letter, the flat part bearing on the cylinder face, so as to cover the port, and the curved back fitting against elastic or metallic packing to prevent the passage of steam past it. Fig. 73 shows this form of valve, and it will be seen that it differs from the locomotive slide-valve in not covering the exhaust-port at the sides, and by providing for passing of steam from one end to the other *through* itself, instead of being surrounded by steam. This kind of valve is practically relieved from the pressure on the face due to the steam, and therefore should have less resistance to motion than the slide-valve; but in practice the pressure

from the packing was excessive, and even then it was very difficult to keep steam-tight, especially in the corners at the sides; it was consequently discarded in favour of the locomotive valve.

Seaward's Valves.—To get a more perfect arrangement of cut-off and release than is possible with one valve, the late Mr. Seaward fitted a separate valve and ports for steam and exhaust, and to avoid the large amount of *clearance* which such an arrangement would entail, he used four valves, a steam and an exhaust-valve for each end of the cylinder, and by placing the ports close to the ends of the cylinders, reduced the passages to a minimum. Each valve was simply a flat plate, and worked by cams on the shaft, and however early the steam-valves cut off, the exhaust-valves always opened just at the end of the stroke. This arrangement, although admirable in many ways, has succumbed on account of complication of gear and multiplicity of parts; and notwithstanding attempts to modernise it to suit the compound engine, it is now a thing of the past.

Common or Locomotive Slide-Valve.—Fig. 74 shows the modern form of the valve, and it is so well known as to require no description. So long as the cut-off is later than half the stroke of the piston, this valve answers very well for engines of moderate size; but when an earlier cut-off is required, sufficient opening to steam can only be obtained by excessive travel, large leads, or very broad ports, neither of which is desirable when it can be avoided. Large travel of valve means large power to drive it; broad ports produce the same result by increasing the area, and consequently the load on the valve; and large *leads* are apt to produce severe shocks on the rods, framing, &c., and to unduly check the piston.

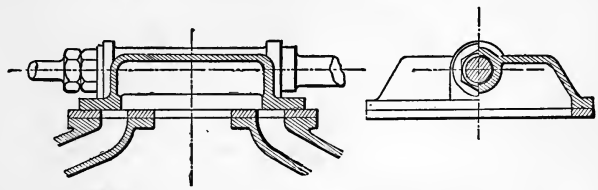

Fig. 74.—Common Locomotive Slide-Valve.

Trick Valve.—Fig. 75 shows an ingenious plan for obtaining a double opening to steam by means of a passage around the valve, the entrance to which is at the end, remote to that at which steam usually enters, and whose exit is through the lap or cover of the valve. This invention is due to Herr Trick, and has been used on the Continent in locomotive and other fast-moving engines. It will be seen that the effective surface of the valve exposed to steam pressure is considerably reduced below that of the common slide-valve.

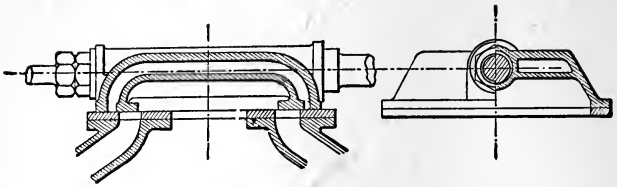

Fig. 75.—The Trick Valve.

Double-Ported Valve.—This valve (fig. 76) has a system of ports and passages which is added to the locomotive slide-valve, to allow of admission and emission of steam through a second port in the cylinder face, so that with the same travel as the common valve, there is double the area of opening for steam, and double the area for exhaust. This form of valve is very generally adopted for both the cylinders of compound engines of large size, and for the low-

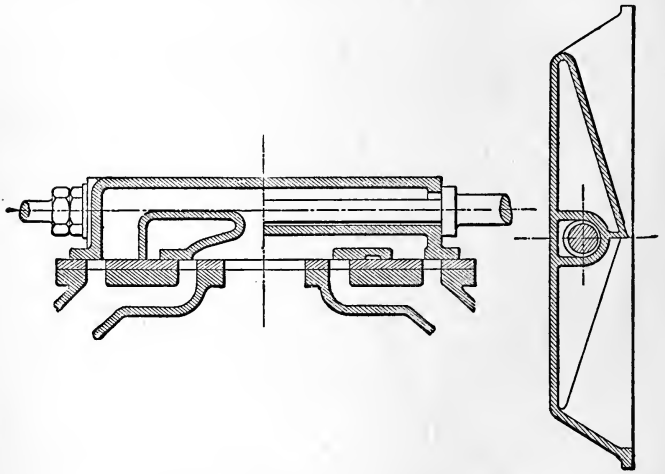

Fig. 76.—Common Double-Ported Valve.

pressure cylinder of even very small engines. Care must be taken in designing such a valve, that there is the requisite area for steam to enter into the cavity leading to the steam port, and also that there is ample room at its back for the exhaust steam to pass from the outer port of the cylinder.

Treble-Ported Valves.—To obtain still larger opening for steam, the lap of the double-ported valve is extended so as to cover a third port at each end; a portway is made through the cover lap, which admits

steam to the *second* port of the cylinder, while steam enters the third port of the cylinder through the opening beyond the valve in the usual way. But since the length of face and valve required for this form of valve is very nearly as much as if it had a port and passage to admit of exhaust, it has been discarded in favour of a treble-ported valve, similar in all respects to the double-ported. Some very large engines have four-ported valves, similar in design to the double-ported. Such valves are very large and heavy, and require a large amount of power to move them; but they work very satisfactorily, and so far have not any successful rivals for steam of low-pressure. When used for the high-pressure cylinder of compound engines, both treble- and double-ported valves require relief plates or frames to diminish the large area they expose to steam pressure.

Hackworth's Valve.—Fig. 77 is an illustration of the valve invented by the ingenious Mr. J. W. Hackworth, and which gives three openings to steam for one cylinder port, and that with only

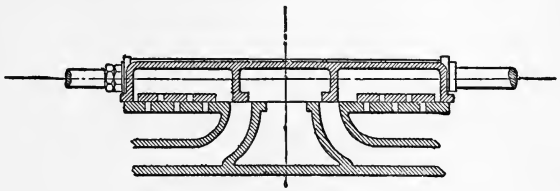

Fig. 77.—Hackworth's Patent Valve.

a comparatively small area, unbalanced by steam pressure. The valve is a very simple casting, and although somewhat long is not so much so as the usual treble-ported valves. It is designed to be worked by a very ingenious arrangement of gearing, having only one eccentric, and capable of cutting-off at a very early period of the stroke, without undue cushioning, or too early release, as well as reversing.

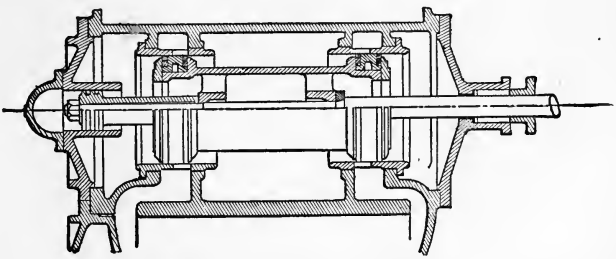

Fig. 78.—The Piston Slide-Valve.

Piston Valves.—No system of relief frames or plates has yet been tried which has given entire satisfaction;* some indeed produce more resistance than they have been designed to reduce, and the best cannot be depended on for any very long period when exposed to the temperature of high-pressure steam. The area of opening of port is restricted when only a common locomotive slide-valve is used, and its extensions magnify the evil which relief frames are supposed to cure. It has been stated that circular valves of the *mushroom* type do not work well in fast-running engines, although they give a good opening to steam. To combine the advantages of the two systems the piston valve is designed (fig. 78). The port area is nearly three times that of a flat valve of the same dimension transversely, and the pressure on the sides due to the steam is nil. Essentially, the piston valve consists of two pistons, the face of each being equal in length to the bars of a locomotive slide-valve, and connected by a rod. These pistons are fitted into a cylindrical chamber having ports corresponding to those in the cylinder face; the faces of the piston cover these ports, and have the same amount of lap, &c., as a common valve. Steam is admitted outside the pistons, and it exhausts from the cylinder into the space between them, and from there in the exhaust passage in the usual way.

When the pistons are sufficiently large they are connected by a pipe or hollow casting (as shown in fig. 78), through which steam can pass from one end to the other; if this cannot be accomplished, the two ends of the valve-case are connected by a pipe cast with or connected to it.

Small engines, when fitted with such valves, have them in their simple form, the pistons being plain brass discs of the required thickness, generally cast in one piece. Such a form would suit all sizes of engines, if always working at full speed; but when standing or running slow, the leakage past the valve, when it was worn, would soon be so considerable as to cause serious loss and make the engine very unhandy. To avoid this it is usual to pack the pistons much in the way that ordinary pistons are packed, except that the junk-rings and flanges are chamfered away, and the packing rings are made to project from them so as to allow free passage to the steam. The spring-rings are made of strong cast iron, or bronze with stiff cast-iron lining rings inside them, and since, owing to the very slight velocity at which the valve moves, the wear is small, the rings should have very little *set* or spring. Rings similar to those of Mather & Platts' piston are very suitable for this purpose. The liners in the valve-box are usually made of cast iron (hence bronze packing rings), fitted tightly in and secured by flanges.

There are *diagonal* bars across the ports to act as retaining

* The patent relief frame of Mr. C. W. Church has proved now to be a success with steam at 150 lbs., and is an exception to the rule. (See fig. 83, p. 280).

guides to the packing rings; these bars are usually from $\frac{3}{4}$ to $1\frac{1}{4}$ broad, and take away about a third of the gross portway. The passage way around the liner must be so designed as to allow due area of section for the passage of steam; and to economise space, and reduce the clearance space, they are eccentric to the liner and valve. To avoid the chief defect in these valves—viz., large clearance space, the valve should be long so that its ports are nearly in line with those at the cylinder bore.

Piston valves are now becoming very general, and experience of them has given the necessary confidence for their more extended use. For steam of a pressure over 100 lbs. they have become a

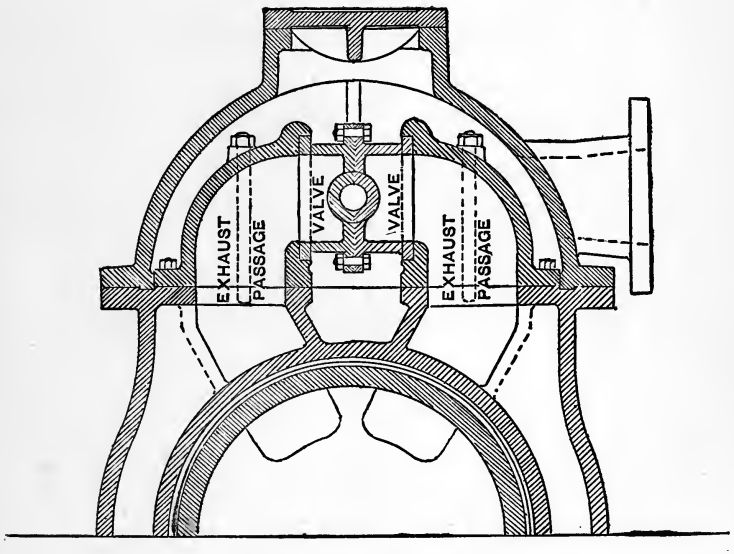

Fig. 79.—Self-Balanced Valve.

necessity, and they may be used with advantage for the high-pressure cylinder for pressures down to 75 lbs. Some manufacturers use them for the low-pressure cylinder, but few engineers will care to incur the expense of them for a purpose where they are generally quite unnecessary.

Relief Frames.—The resistance of a slide valve is almost wholly due to the friction on its face, and the greater the pressure on the

valve the greater will be the friction. This pressure is due to the fact that that on the back of the valve is only very partially balanced by that on the front. The common locomotive slide-valve may, during certain portions of its stroke, have no pressure at all acting so as to tend to press it off its face. Just at cut-off it is relieved to the extent of the area of one port, but this relief decreases as soon as the steam in the cylinder expands: and if it exhausts before opening at the other end for steam, its whole area is exposed to the full amount pressing it to its face. It will be

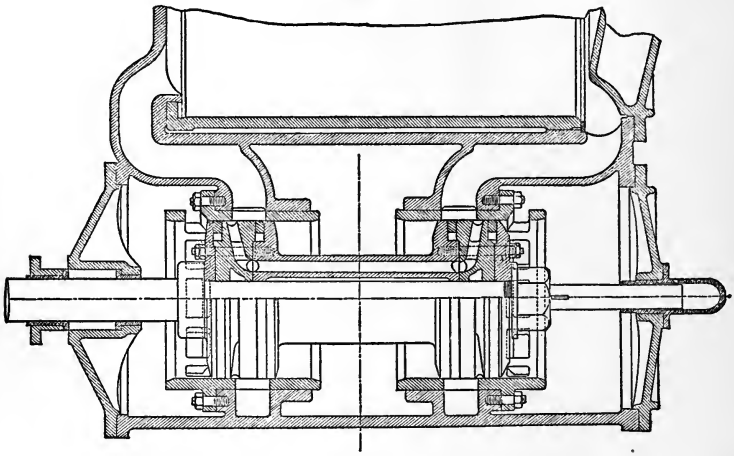

Fig. 80.—Thom's Patent Piston Valve.

seen from this that the resistance is ever varying, and this statement is true also of double- and treble-ported valves, so that if a *definite and fixed* area of the back of the valve is so covered as not to be exposed to steam pressure, it does not meet the case; this, however, is the usual way in which the valve is relieved, the area being such that the valve is always pressed to its face. An exception to the rule is seen in the relief arrangement of the valves of the torpedo boats of Messrs. J. I. Thorneycroft & Co. These valves have a face on their back similar to their front, with recesses corresponding to the ports; on the back of the valve there is a plate, which has ports like those on the cylinder face, bearing gently, so that, in one respect, it is like the piston-valve.

Double Valves.—Fig. 79 shows an ingenious arrangement by which one valve is made to balance another by attaching one to the

other, and the two valves both operate for the same purpose, hence each may be half the size of an ordinary valve.

The two valves are faced up, and so set that they are a slack fit between the two faces when cold. The port-ways are, as shown on the diagram, bolted to the main casting on each side, and from their form the pressure of the steam in the valve-box causes them to spring and so approach one another, making the combined valve tight on each face. At the same time, the pressure is not so much as to cause very great resistance to the motion of the valve. This form of valve has been found in practice to work very well indeed, and many months of use have produced little or no wear on the valve faces.

Fig. 80 shows a piston valve adapted by Mr. Thom with the same principle as the Trick valve.

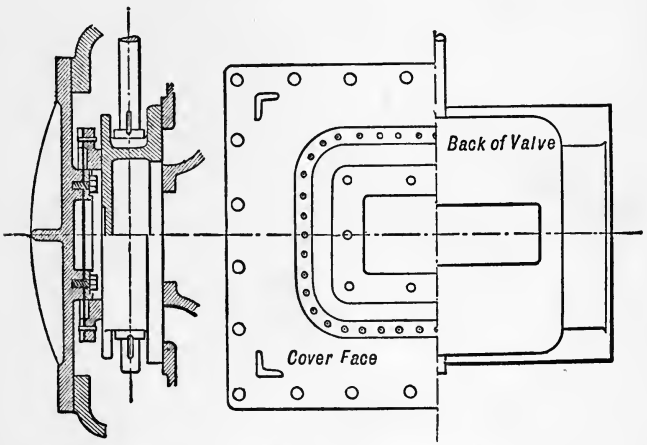

Fig. 81.—Dawe & Holt's Patent Relief Frame.

This arrangement rather complicates the piston valve and renders it far less simple than in the ordinary form, but there are no practical difficulties in the way of accomplishing what Mr. Thom aims at—viz., to admit some steam for the purpose of cushioning at one end of the cylinder from the exhaust just commencing at the other end. This, it is hardly needful to say, is of considerable advantage with the low-pressure cylinder, but is not so necessary to the medium-, and not at all necessary to the high-, pressure cylinder of a triple expansion engine.

Dawe & Holt's Patent.—This consists of a rectangular cast-iron frame, fitting steam-tight to the face on the back of the valve, and riveted to a steel or bronze sheet, which is itself secured steam-

tight to the valve (fig. 81). The diaphragm is only 18 B.W.G. thick, and so allows the frame to move slightly to suit the valve. This is so made that the frame is pressed back about $\frac{1}{16}$ inch when the valve is in place, and the frame itself, being exposed to steam pressure, is always pressed against the valve, the area enclosed by the frame being the amount of relief given to the valve.

Common Relief Frame.—The ordinary method of relieving the back of the slide valve from steam pressure, is by means of a frame

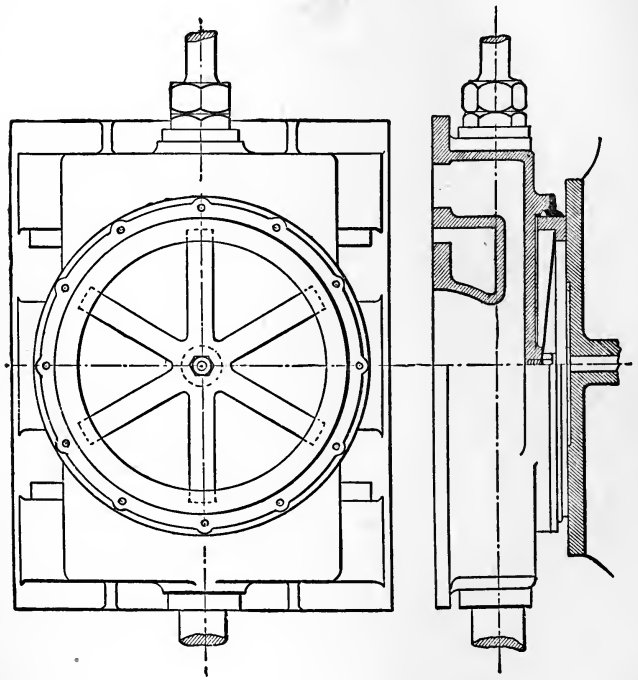

Fig. 82.—Common Relief Frame.

of circular or rectangular form, fitting steam-tight, but freely, into a recess in the valve-box cover, and pressed against the smooth face at the back of the valve by set screws, an elastic material, such as india-rubber, being interposed between the screws and the frame, in order to give greater freedom to it.

Fig. 82 is a modification of the common plan, and is especially

applicable to valves of nearly square form. In this case the relief frame is circular, fitted into a recess in the back of the valve, and pressed out by a star-shaped steel spring.

There are many other plans for preventing slide-valves from pressing unduly on the cylinder face, some by means of springs, and some by pistons acting perpendicularly to the direction of motion of the valve, but none of them are free from objection, nor have any, except Church's (fig. 83), as yet given unqualified satisfaction.

Back Guides and Springs.—To prevent slide-valves from being forced from the cylinder face, it is necessary to have guides behind the valve, with suitable rubbing surface on the valve itself; but as it is not always possible to easily provide such guides, and since, when the valve and face have worn somewhat, they fail to keep the valve to its face, it is generally preferable to fit a pair of flat bar springs, whose backs press on rubbing strips on the valve, and the ends on a fixed part, one end of each being secured, and the other free to slide on the flattening of the arc.

Balance Pistons.—Since the weight of the valves, their rods, and gearing, in the case of vertical engines, is taken by the eccentric straps, and if it were unbalanced the top half of the straps would be subject to more wear than the lower, it is advisable to provide some means of avoiding this. The readiest is by fitting to the top end of the valve-spindle a piston (figs. 26 and 78), which works in a cylinder, provided in the valve-box cover or top; this piston is of sufficient area, that the steam-pressure on it affords the balance required, and it also acts the part of a guide for the spindle. When the eccentric rods are very long, it is better to give an excess of area to the balance pistons, so that the rods may be *always in tension*, instead of alternately in tension and compression. Since the pressure in the valve-box of the low- and medium-pressure cylinder of a compound engine is constantly varying, it is better, especially when the above object is aimed at, to place the balancing cylinder outside the box, and supply steam from the boiler to the under side of the piston, so that the balancing force may be constant; but, on the other hand, since the resistance of the valve varies with the pressure in the valve-box, there is not the same necessity for so much balancing force as would be the case were it otherwise; so that, on the whole, the piston exposed to the pressure of the valve-box is sufficient for the needs of most engines.

The top of the balance cylinder of the high-pressure valve should be connected to the receiver by a small pipe, and that of the low-pressure valve to the condenser.

Valve Rods or Spindles.—Since it is possible for a slide-valve to be exposed to the pressure of steam on its whole area, without any relief due to the ports, &c., and this may occur even when the valve is fitted with relief frames, it is better to assume this in making all calculations for determining the sizes of the parts to move it.

If L be the length of a valve, and B the breadth in inches, p the

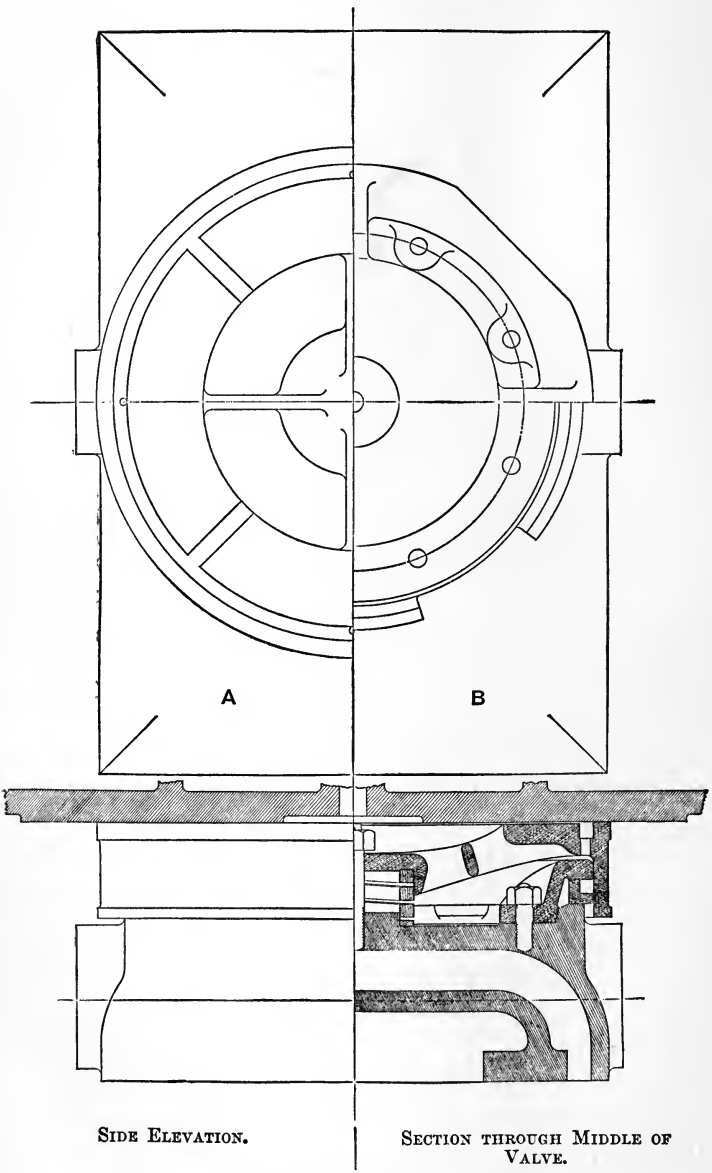

Fig. 83.—Church's Patent Relief Frame.

A. Plan of Relief Ring. | B. Plan with Ring Removed.

maximum absolute pressure to which it is exposed in pounds per square inch, then :—

$$\text{Maximum pressure on the valve} = L \times B \times p \text{ lbs.}$$

The co-efficient of friction should be taken at 0·2, or that of metallic surfaces rubbing together dry, as this is the worst condition likely to occur, then,

$$\text{Strain on valve-rod} = 0{\cdot}2\ (L \times B \times p) \text{ lbs.}$$

Since the spindle has to take similar strains to those on a pistor. rod, it may be dealt with in the same way.

A stress of 2500 lbs. for iron, or 3000 lbs. for steel per square inch, should be allowed in the case of comparatively long rods, and 3000 and 3600 when very short and well-guided. Hence

$$\text{Diameter of slide-valve rod} = \sqrt{\frac{L \times B \times p}{F}}.$$

When the rod is long and of iron, F = 10,000.
" " " steel, F = 12,000.
" " short " iron, F = 12,000.
" " " steel, F = 14,500.

In the case of the valve of the low-pressure cylinder, the pressure should be taken at 30 lbs. absolute, as the pressure in the receiver seldom exceeds 15 lbs. above atmospheric pressure. For convenience the rods for both high-pressure and low-pressure cylinders should be alike, and consequently the size should be the largest given by calculation from the above rules.

When the guides of the valve-rod are above the rod end, so that in reversing the link a severe bending strain would come on the rod, it should be somewhat larger in diameter. In cases of this kind, F should be taken at 20 per cent. less than given by the above rules.

Valve-Rod Bolts.—When the joint at the valve-rod end is made capable of adjustment by means of two bolts (fig. 88); then,

$$\text{Diameter at bottom of thread} = \sqrt{\frac{L \times B \times p}{H}}.$$

When the bolts are of iron, H = 33,000; when of steel, 40,000. This same rule applies to the bolts of eccentric-rod ends, and to the bolts at the butt-end of eccentric rods.

For the bolts of eccentric straps, H = 28,000 for iron, and 34,000 for steel.

Valve-Rod Guides. — The valve-rod end should always have a

guide, so that the side strain due to the obliquity of the eccentric rods, or to the action of the link-motion, shall not only not bend the rod, but shall not come on the gland and so cause leakage, &c., through the stuffing-box. The kind of guide depends very much on the link-motion used, as what suits one form is not applicable when another kind is used. The simplest form consists of a cast-iron bracket with an eye bushed with brass, through which the rod passes; but since the rod soon wears away the bush, if subject to much side strain, this is not a satisfactory plan for large engines, although a convenient and fairly trustworthy one for small ones. If the rod is made of larger diameter in wake of the guide, and planed flat on the sides which are exposed to pressure, and the bracket fitted with brass liners, shaped like a common key, so as to be secured by screws through the gib ends, a simple and efficient means is provided for taking all side-pressure.

Slot links require a different kind of guide when they work on overhung pins, which is often the case of necessity in horizontal engines, to obtain eccentric rods of sufficient length. Then the valve-rod is fitted into the socket of a guide-piece, shaped somewhat like a bayonet, whose shank is of square section and works in a guide bracket fitted to the framing.

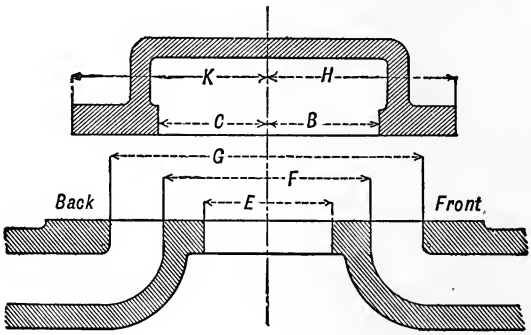

Fig. 84.—Proportions of a Common Valve.

Let x be the *outside* lap of the valve at the front end, and y that at the back end. Then,

$$H = \frac{G}{2} + x; \qquad \text{and } K = \frac{G}{2} + y.$$

Let z be the *inside* lap at the front, and w that at the back. Then,

$$B = \frac{F}{2} - z; \qquad \text{and } C = \frac{F}{2} - w.$$

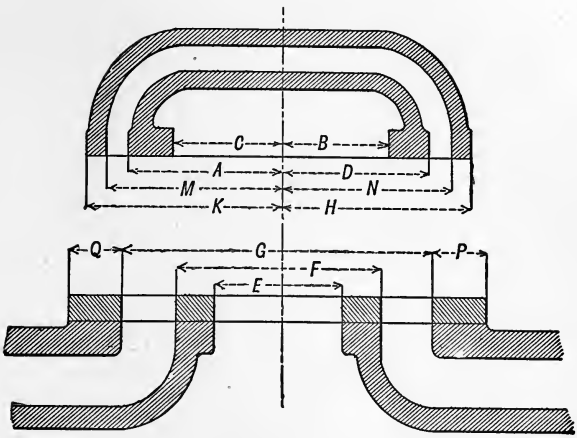

Fig. 85.—Proportions of a Trick Valve.

Let x, y, z, and w be the laps as before. Then,

$$H = \frac{G}{2} + x; \qquad \text{and } K = \frac{G}{2} + y.$$

Also,

$$B = \frac{F}{2} - z; \qquad \text{and } C = \frac{F}{2} - w.$$

$$A = \frac{G}{2} + \tfrac{1}{8} \text{ inch}; \qquad \text{and } D = \frac{G}{2} + \tfrac{1}{8} \text{ inch}.$$

The openings through the valve laps or covers must be as large as possible, but need not exceed the ordinary opening of the valve to steam at the outer edge; then

$$G + P = K + N;$$

and

$$G + Q = H + M.$$

Valve Gear: Link Motion.—The common form of motion employed to work the valves of a screw engine consists essentially of two eccentrics keyed on the crank-shaft in such a position relative to the crank that when one is operating on the valve, the engine will propel the ship a-head and is said to be in *head-gear*, and when the other, the engine will propel the ship stern first and is said to be in *stern-gear*, their rods being connected by a bar or bars on which is a block to which the valve spindle is attached. This bar connection is called the link, and is of such a form that by sliding it through the block, the *head* or *stern* eccentric may at pleasure be brought to operate on the valve.

In designing a link gear, the most important objects are to give the valve such motions as shall cause it to open to steam slightly before the piston is at the end of its stroke, the amount by which it

is open at the end of the stroke, or commencement of the next stroke, being called the *lead* of the valve; to then open fully, and close at the required period of the stroke of the piston called *cut-off;* to confine the steam during the remaining portion of the stroke, so as to *expand* in the cylinder, and at or near the end of the stroke to allow the steam to escape from the cylinder, called *exhaust;* to close the port again before the end of the stroke, so that the piston compresses the steam remaining in the cylinder and port. These operations should be effected with the expenditure of as little power as possible, and with this end in view the motion of the link should be, as far as possible, limited to moving the valve only; consequently the link itself should have no sliding motion longitudinally, called *slotting motion*, in the block, but only the angular motion due to the two eccentrics. A perfect valve motion is such that the valve opens to steam *wide* immediately the crank has passed the *dead centre*, and remains open during the admission of steam, so that there is no wire-drawing; the valve closes suddenly, and remains closed during expansion; at the end of the stroke it opens wide to exhaust, and remains in that state during the whole period of exhaust, and at the end of it closes suddenly, and remains closed till opening again to steam. This is not obtainable with the ordinary link motion, nor to its full extent with any motion when one valve only is employed for both ends of the cylinder, because the period of cut-off at one end does not, as a rule, correspond to the period of compression at the other end; but there are valve gears which

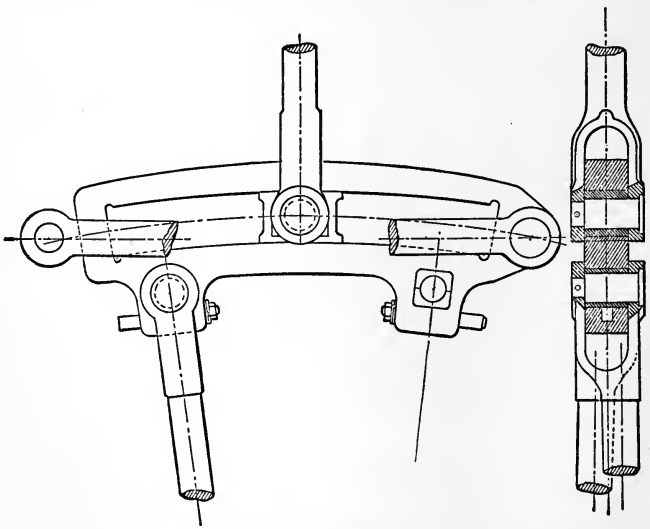

Fig. 86.—The Slot Link.

have two periods of very quick motion, and two of very slow in each cycle, which very closely fulfil the above conditions, and which will be noted later on.

Slot Link.—This, which is one of the oldest forms of link, is still retained by many engineers, and is well adapted to the circumstances of several forms of engine, such as the oscillating paddle-wheel engine, and all engines in which there is not direct connection between the eccentric rods and the valve-rod, and also in some of the horizontal engines when it is either impossible or inconvenient to have direct connection.

Fig. 86 is an illustration of the ordinary slot link, having adjustment for the sliding block and eccentric-pin brasses. Locomotive engineers prefer, as a rule, to have the pin-holes fitted with hard bushes rather than adjustable brasses; but this opinion is not shared by marine engineers, and chiefly on the ground that in a foreign port it is seldom possible and never convenient to engage the services of workmen and tools to renew these bushes when so badly worn as to require renewal.

This kind of link is generally suspended from the end next the head-going eccentric rod, at a point in line with the arc through the block-pin; and if the pin in the lever, which operates on the link to reverse it, is placed in the proper position, there is very little slotting motion indeed when working in *head*-gear. The same remark applies to the position of the pin when in *stern*-gear, except that the amount of slotting motion is somewhat greater of necessity; but since a marine engine, as a rule, works but very little in *stern* gear, and its efficiency there is of small consideration comparatively, this defect is of little moment.

Position of Suspension Pin.—To obtain the best position of lever pin, it is necessary to draw out the path of the centre of pin in the link end through one revolution of the engine when the link has *no slotting motion.* The path so found is like an attenuated figure 8 in head-gear, and somewhat more pronounced in stern-gear. The arc of a circle of radius equal to the length of the suspension or bridle rods, is then drawn through each of these figures in such a way that there is the least possible deviation of the figure on either side; that is, the arc is the centre line of the figure, if the deviation on one side equals that on the other. The centres of the circles to which these arcs belong should be the centres of suspension of the bridle rods, or position of pin in reversing lever end. By drawing arcs of circles of radius equal to the length of the reversing lever from these two centres, the points of intersection are the two possible positions for the centre of weigh-shaft.

This same method of construction is suitable to all kinds of links, and for all positions of the point of suspension of the link.

When it is necessary that the motion shall be as efficient in *head*-gear as in *stern*-gear, the link should be suspended from a point in the line dividing it symmetrically, and by preference at

the intersection of this line with the arc through the centre of block-pin, so that the centre of suspension is in line with the centre of block-pin when in *mid-gear*. When this is so, the pins for suspending the link are on side plates bolted to the sides of the link.

The distance from centre to centre of eccentric-rod pins should not be less than two and a half times the *throw* of the eccentrics, and is usually, when space permits, two and three quarters to three times. The *throw* of the eccentrics in this case is, of course, equal to the travel of the valve when in *full* gear.

Size of Slot Link.—Let D be the diameter of the valve spindle, from the calculation

$$D = \sqrt{\frac{L \times B \times p}{12{,}000}};$$

then

Diameter of block-pin when overhung . .	= D.
„ „ „ secured at both ends	= 0·75 × D.
„ eccentric-rod pins	= 0·7 × D.
„ suspension-rod pins . . .	= 0·55 × D.
„ „ rod-pin when overhung	= 0·75 × D.
Breadth of link	= 0·8 to 0·9 × D.
Length of block	= 1·8 to 1·6 × D.
Thickness of bars of link at middle . .	= 0·7 × D.

If a single suspension rod of round section, its diameter = 0·7 × D.
If two suspension rods of round section, their diameter = 0·55 + D.

The objections to the slot link are, that it is an expensive one to make, and that, owing to the eccentric pins and the block-pins being out of line, there is always an uneasy motion about the block-pin, and more slotting motion of the block. The former is valid, especially when the link is made of wrought iron, but when made of cast steel it is not so expensive as some other forms. The uneasy motion is often due to bad design, for, when well designed and carefully hung, it will work very satisfactorily.

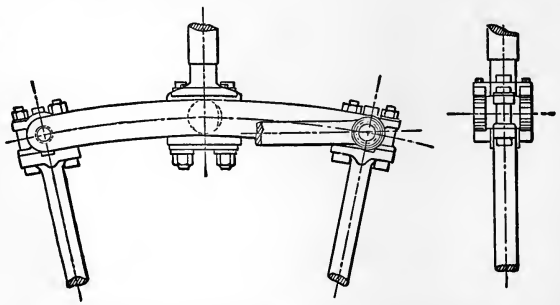

Fig. 87.—Double-Bar Link with Rods inside.

Single Bar Link.—This kind of link consists of a single solid bar, of rectangular section generally, and having the eccentric rods connected to each end, and a sliding block between, to which the valve spindle is connected. The form of link, although tried by more than one eminent firm of engineers, has gradually been dropped, notwithstanding the many ingenious elaborations devised to overcome its defects.

Double Bar Links.—There are two kinds of double bar links; one (fig. 87) having the eccentric-rod ends, as well as the valve-spindle end between the bars, so that the travel of the valve is less than the throw of the eccentrics; the other (fig. 88) has the eccentric rods formed with fork ends, so as to connect to studs on the *outside* of the bars, and thus admits of the block sliding to the end of the link, so that the centres of the eccentric-rod ends and the block-pin are in line when in full gear.

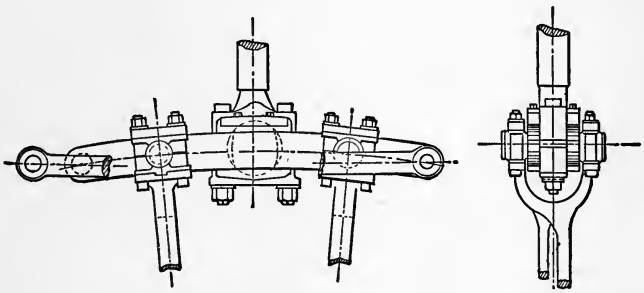

Fig. 88.—Double-Bar Link with Rods outside.

The former plan is cheaper to make, is simpler in construction, and has fewer parts to get out of order and adjust; and when adjustment is required, it is easier to make, and there is less chance of its being done improperly. When in *head*-gear, part of the work of moving the valve is done by the *stern*-going eccentric, so that the wear is not limited to the one eccentric strap. When properly hung, the slotting motion is exceedingly small, and the valve motion is as perfect as with the other form. The objection to it is that the eccentrics are larger in diameter than those with the other links, and the links themselves are longer, and more space is required for the eccentric rods to move in.

Size of Bar Links.—Let D be the diameter of valve spindle, found as before.

Fig. 88, distance between centres of eccentric pins, 3 to 4 times throw of eccentrics.

Depth of bars. . .	$= 1{\cdot}25 \times D + \frac{3}{4}$ inch.
Thickness of bars . .	$= 0{\cdot}5 \times D + \frac{1}{4}$ inch.
Length of sliding block .	$= 2{\cdot}5$ to $3 \times D$.

Diameter of eccentric-rod pins $= 0{\cdot}8 \times D + \frac{1}{4}$ inch.
„ centre of sliding block $= 1{\cdot}3 \times D$.

Fig. 88, distance between eccentric rod pins $2\frac{1}{2}$ to $2\frac{3}{4}$ times throw of eccentrics.

Depth of bars . . .	$= 1{\cdot}25 \times D + \frac{1}{2}$ inch.
Thickness of bars . .	$= 0{\cdot}5 \times D + \frac{1}{4}$ inch.
Length of sliding block .	$= 2{\cdot}5$ to $3 \times D$.
Diameter of eccentric-rod pins	$= 0{\cdot}75 \times D$.
Length „ „	=

Diameter of eccentric bolts (top end), at bottom of thread $= 0{\cdot}42 \times D$ when of iron; and $0{\cdot}38 \times D$ when of steel.

These bars should be of a very good description of iron and case-hardened, or of steel; the latter is of course free from seaminess and stronger. The eccentric-rod pins of the kind of link (fig. 88) are usually forged solid with the bars, but there is no absolute need of this, and it adds very much to the cost, both of manufacture and renewal when worn. Since the wear on these pins is limited to a very small portion of their circumference, it is not unusual to file away the parts which are not subject to wear, so as to admit of the brasses being closed when worn. When loose pins are fitted, they should be steel, and hardened, so that all wear may come on the brasses which are capable of adjustment.

In another arrangement of bar-link motion, the sliding block is divided, and on the outside, while the eccentric-rod ends are between the bars. This, while having some slight advantages, is on the whole very clumsy, and the block-pins wear badly; besides which, the link can be only suspended from the extreme end.

Single Eccentric Gears.—The valves of slow-working engines can be worked by a single eccentric, which is free to move round on the shaft from the position for *head*-gear to that for *stern*-gear; it is driven by a key or *stop* fixed to the shaft, pressing against a shoulder on the side of the eccentric. The eccentric sheave is balanced so that it will stop in any position, and only move when driven by the *stop* on the shaft. The eccentric-rod is so fitted that it may be disconnected from the valve-rod or its gear. This is generally effected by providing a *gab* or gap in the eccentric-rod end instead of a pin-hole, which allows the eccentric-rod to be lifted from its pin by suitable gearing. When the eccentric-rod is disconnected from the valve gear, the valve ceases to move, and the engine comes to rest. To restart the engine the valve must be worked by hand until the gab can be brought in line with the pin; if the motion of the engine is reversed the shaft will move around, the eccentric remaining motionless until the stop on the shaft comes in contact with the other side of the projection on the sheave, when it

is then in the right position for driving the valves, and the eccentric-rod may now be dropped into gear. This method admits of the paddle engine being handled very dexterously when the valves are not so large as to prevent their being moved by hand, and is the one generally adopted in engines of moderate power.

An improvement on the gab-end has been made by fitting a short rod to the eccentric-rod end, which slides in a hollow socket on the valve-rod end when disconnected, and is secured to it by a cotter when *in gear*. The loose eccentric is not applicable to fast-running engines, on account of the momentum of the eccentric and its balance-weight causing it to overrun the engine if it is suddenly stopped or even retarded, which sometimes would cause its motion to be reversed.

The single eccentric is of course much cheaper than link motion and double eccentrics, and much skill and ingenuity have been expended in devising methods for reversing engines with only one eccentric and a simple rod to connect it to the valve-rod or gear. It is unnecessary here to give any but those which have been successful and are now used.

Single Eccentric with Sliding Reversing Rod.—The eccentric sheave in this case is fixed to a *sleeve* or liner, fitting easily on the shaft; the shaft in way of this *sleeve* is hollow, and has a slot extending nearly the length of the sleeve; on the inner surface of the *sleeve* is a spiral groove corresponding in length to the slot; a rod passes down the middle of the shaft, on whose end is a pin, which projects through the slot and fits into a block which slides in the groove; by sliding the rod in or out the sleeve moves round the shaft, and with it the eccentric sheave, the angle through which the sheave moves depending on the angle of the spiral groove. The sliding rod is operated on in small engines by a simple lever, and in large ones by screw gear.

It is doubtful, however, if this plan is any cheaper than link motion; it is certainly not better, especially as it does not possess all the advantages of the latter, so far as working expansively is concerned.

An obvious variation of this gear is obtained by making a spiral slot in the shaft and a straight groove in the sleeve.

There have been many other methods of moving a single eccentric from ahead to astern position; some of which by sliding wedges were at one time received favourably, but are now almost forgotten.

Hackworth's Dynamic Valve Gear.—The motion of a point on a rod, one end of which moves in a circle, and the other on a straight line passing through the centre of that circle, is on an ellipse whose major axis coincides with the straight line. If, however, the end of the rod slides on a line inclined to this centre line, the major axis of the ellipse will be inclined.

Mr. J. W. Hackworth's valve motion works on this principle, for his gear has a single eccentric keyed to the shaft *exactly opposite to the crank;* the eccentric-rod has its end attached to a block,

which slides on a guide-bar inclined to the line through the centre of shaft; and a rod from about the middle of the eccentric-rod is connected to the valve-rod, which works in a line at right angles to the line through the eccentric-rod when in mean position. If the guide-bar on which the eccentric-rod block slides be moved so as to reverse its inclination, the inclination of the axis of the ellipse is reversed, and the motion of the engine reversed.

The great advantage of this gear, beyond the saving of an eccentric, is the better motion imparted to the valve, inasmuch as there are two quick and two slow motions in a revolution; the quick ones occurring at cut-off, and the slow ones during exhaust and previous to opening. A large variation in the amount of cut-off is possible with this arrangement, without wire-drawing from small opening and slow closing of the port, as is the case with the common link motion. The chief objections urged against this gear are the excessive friction, and consequent wear on the sliding blocks, and the liability of so many pins to derangement. The first of these is the most valid, and it has been overcome by fitting rollers instead of sliding blocks. In both ways, however, this gear has worked fairly well; and for engines of small power it is a very convenient arrangement, especially when much variation in cut-off is required.

Since the valve rods with this gear do not come in line with the piston-rods, or immediately over the line of shafting, the valves and their chests are removed from the usual positions, so as to admit of the cylinders being closer together; the engine is consequently shorter, cheaper, and occupies less space. This suited the expansive engine admirably; for the two valves, being in one common chest, could be examined through a door in front, of ample dimensions to admit a man; for the compound engine, however, it is not quite so suitable, although it can be used, and that in some cases with advantage; but generally it allows of little space for the receiver, and the exhaust from the low-pressure cylinder must pass through a belt within the receiver, or else this belt has to traverse more than half the circumference of the cylinder.

Marshall's Valve Gear is a modification of Hackworth's, and differs from it in the method of getting the oblique motion of the rod-end. Fig. 89 shows the plan adopted by Mr. F. C. Marshall, and also illustrates generally what has been said of Hackworth's. Here the eccentric-rod is hung, by means of a rod from the end of a lever on a reversing shaft, in such a way that it moves on the arc of a circle inclined to the centre line. The motion is not quite so perfect as with the inclined sliding bar, and necessitates double ports to the bottom end of the slide valve, in order to get as much opening to steam there as at the top end; but there is less friction, and, on the whole, it works most satisfactorily. The pins require to be of good size, and they should all have adjustable brasses to provide for the large amount of wear which of necessity comes on them.

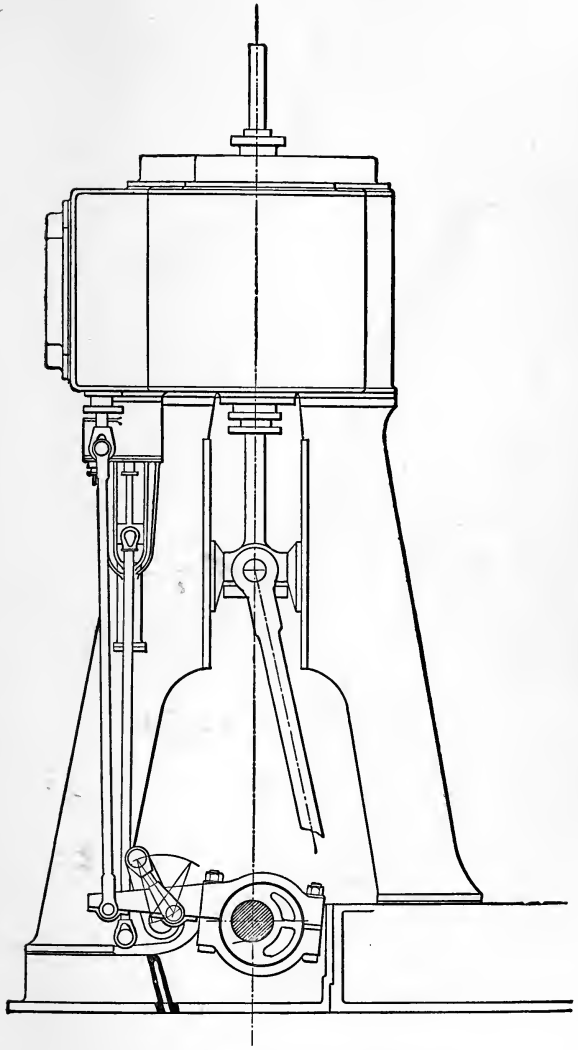

Fig. 89.—Marshall's Patent Valve Gear.

Joy's Valve Gear. — Fig. 90 shows the ingenious arrangement whereby Mr. David Joy has avoided altogether the use of eccentrics. He obtains the motion from the connecting-rod, and qualifies it by a sliding block like Hackworth, or a suspension-rod like Marshall. The motion thus obtained is a very perfect one for a slide valve, as the two quick and two slow periods are just when required, the amount of opening is equal at both ends of the valve, and early cuts-off can be effected without excessive leads and compressions or premature exhaustings. This gear has been applied with great success to locomotives, where the saving of space for the eccentrics admits of longer crank-pins and journals; it has also been taken up by marine engineers. The chief objections to this gear are that it comes in the way of the principal working-parts, and makes them a little difficult to get at when working, and also that a small amount of wear on the joints of the gear would cause a defect in the valve motion, and produce a serious amount of rattle of the gear. These, however, can be got over by making the pins substantial, and all the joints adjustable.

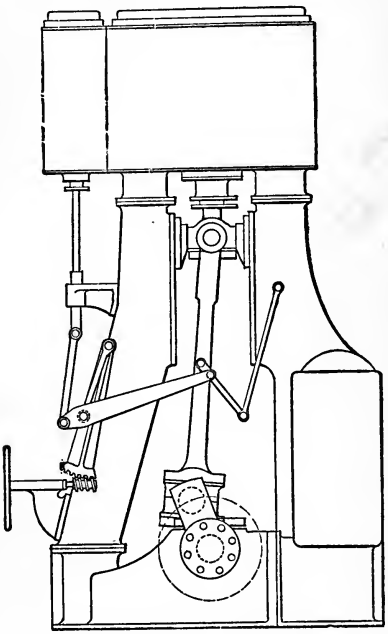

Fig. 90.—Joy's Valve Gear.

Sell's Valve Gear.—Here the valves are worked by an independent shaft, which derives its motion from the main shaft by means of wheel-gearing; between these two shafts are two intermediate wheels gearing into one another—one of them gears into the wheel on the main shaft, and the other into that on the valve shaft. These two intermediate wheels are carried on a frame which can be lifted up and down, and is guided in such a way as to keep the wheels always in proper gear with their corresponding wheels. If the gearing is set so that the valves are moved by their crank-shaft, and drive the engine *ahead* when the frame is at the bottom of its traverse, the moving of the frame to the top of its traverse so alters the relative angular position of the shafts, that the valves will be set to drive the engine astern. This is easily understood by supposing the engine at rest, and the frame raised; the

wheel geared into the one on the crank-shaft, in moving round the shaft also turns on its own axis, and in so doing turns its companion-wheel, which turns the wheel on the valve shaft, and consequently the valve shaft itself.

This gear has been fitted to many engines in the English and foreign navies, and was especially suitable for the three-cylinder engines for which it was originally designed. It has, however, the objectionable feature of wheel-gearing, which, when new, makes a great noise, and is liable to accident from *racing* of the engines, but when worn, these are magnified very considerably by the *back lash* which results.

Wheel-gearing for driving the valves was at one time very favourably received, especially by French engineers, who had one or two plans which were said to give exceedingly good results, but its use has now almost died out; and although a second shaft with wheel-gearing was adopted by the designers of the engines of the SS. "City of Rome" for a particular purpose,* it is not likely ever to revive again, at least not in the mercantile marine.

Expansion Valves. — When ordinary link motion is employed, and an earlier cut-off than half-stroke is required as a normal condition, it is necessary to effect it by means of an independent valve, usually called the expansion valve. These valves are usually common plates, sliding either on a face with ports on the side of the valve-box, or on a face on the back of the ordinary slide-valve. In the latter case there are two methods, commonly known as *the inside cut-off* and *the outside cut-off*.

Gridiron Expansion Valves. — When the valve works on an independent face on the side of the valve-box, it consists of a plain plate with steam ports in it, corresponding to the steam ports on the face; there is sufficient lap, and the gear is so set that it remains closed after it has cut-off, until after the main valve is closed to the cylinder, when it may open again so as to fill the valve-box, and be ready to supply and cut off steam from the other end of the cylinder. The variation in cut-off is effected by varying the travel, and the equalisation of cut-off at each end is effected by varying the proportion of lap on each side of the ports. The variation in travel is obtained by means of a link on which the block to which the expansion eccentric-rod is attached slides, so as to vary the length of lever; the larger the travel of the expansion valve, the quicker is the steam cut off, and the smaller the travel, the later is the cut-off, until, finally, the travel is so small, that the expansion valve does not close at all. The variation in the lap of the expansion valve is effected by means of the curvature of the link.

Some engineers prefer the mean position of the expansion valve to be with the ports closed; in this case the quickest cut-off is effected with the least travel, and consequently with least opening; but since the piston speed is comparatively slow when receiving steam with the early cut-off, a reduction of opening will not be felt;

* This gearing was removed after a few months of trial.

whereas the slow cutting-off when carrying steam to mid-stroke effected by the valve, when the late cut-off is with least travel, produces considerable wire-drawing.

If the engine is generally to work with a cut-off at from $\frac{1}{4}$ stroke to $\frac{1}{2}$ stroke, then the former valve arrangement is the better; if the cut-off is to be, as a rule, from $\frac{5}{8}$ to $\frac{3}{4}$ the stroke, then the latter is better, except that it is somewhat inconvenient to have the ports closed when the valve has least travel, and also that when the expansion valve is not required it must be moving at its highest speed.

The chief objection to this kind of expansion valve is the large amount of clearance space between it and the piston, for the steam expands in the valve-box, as well as in the cylinder, until the main valve closes.

Outside Cut-off Valves.—When the expansion valve works on a face on the back of the main valve, the latter is provided with steam-ways through it from the ports on its back to the ports on its face. If the main valve is single-ported, it is like a common locomotive slide-valve with enclosing ends, so that steam passes to the cylinder only through the passages thus formed. There are then two ports on the back of the valve, one of which is covered at cut-off by the expansion valve, and remains covered until the main valve cuts off. The expansion valve may consist of a single flat plate, which, when in mean position with respect to the main valve, is between the ports on the back of the main valve. If any variation of the cut-off is required in this case, it is effected by varying the travel of the expansion valve with respect to the main valve, or by altering the *lead* of the expansion eccentric. The latter plan would generally be very inconvenient, and consequently, when such a valve is fitted, the variation is effected by varying the travel.

On account of the cut-off being effected by the outside edges of the expansion valve and the ports in the main valve, these are called outside cut-off valves. Since, however, the motion of the valve will be slow when cutting off with a small relative travel, it is unusual to fit a single plate, but to divide it and arrange the gear so that the two plates may be moved apart from one another so as to virtually increase their lap, and cause them to cut off earlier with the same travel. The result of this arrangement is that the expansion valve moves always at the same velocity and through the same space; the cut-off occurs when moving at or near the maximum velocity, whatever be the period of cut-off, and there is consequently little or no *wire-drawing* at the ports. The plates should be so designed that when cutting off at the earliest required period, they do not overrun the port so as to pass steam through at the *inner* edges, and that they may approach close enough together as to allow of a late cut-off if required.

The usual method of altering the position of the plates is by securing them by nuts to a common spindle, on which is cut a right-handed thread for the one plate, and a left-handed thread for

the other, so that when the spindle is revolved the plates move in opposite directions. The nuts should, of course, be made of brass, and provided with collars or other suitable device, so that when the spindle is turned round they do not revolve with it, but only move the plates. The valve spindle usually passes through both ends of the valve box, and is connected to the eccentric-rod by a swivel-joint, which permits it to be turned round; the other end has a feather-way cut in it, and passes through a socket, which is held in place by a suitable bracket, provided with a fixed feather which fits into the groove in the spindle, and a wheel by which it can be turned; by these means the spindle can be turned while the engine is at work.

This plan suffices for small engines, but the power required to move the spindle rapidly increases with the size of the engine, and this not so much owing to the friction of the valves or external fittings, as to that of the screwed parts of the spindle in the nuts on the back of the valve from want of lubrication. This difficulty is so great that in engines of 50 N.H.P., only after a few days of work without altering the position of expansion valve, it has been found impossible to turn the spindle round with the means at command. To avoid this difficulty the gear for varying the cut-off should be outside the valve box, and under the inspection of the engineer. A good plan for carrying out this is to provide each valve plate with a separate rod; each rod passes through a stuffing-box, and is connected to a crosshead by a nut in it, which is free to turn round so as to adjust the position of the spindle. These nuts may have wheels keyed to them gearing into one another, or they may have worm-wheels operated on by a worm between them; in either case the nuts will turn round in opposite directions, so that if the threads on both the spindles are right-handed, the turning of the nuts will cause the valves to move in opposite directions. The spindles are secured to the valve plates, so that they cannot turn round when the nuts are turned; they are also of necessity out of centre with the valves, which must consequently be guided sideways on the main valve. The only objectionable feature in this arrangement is, that the spindles are not secured to the middle of the valves; but practice has shown that this is no detriment, and the whole system works exceedingly well.

If the engine to which this kind of expansion valve is fitted, is required to work with the same efficiency in *stern-gear* as in *head-gear*, the eccentric should be in line with and on the side of the shaft opposite the crank, and its throw should not be less than that of the main valve eccentrics. If, however, the engine will seldom, and for only short periods, work in *stern-gear*, the eccentric should be on the same side as the crank, but nearer the *stern-going* eccentric than the *head-going* one; then the relative travel of the valves is greater in *head-* than *stern-gear*, and the cut-off is also earlier in head-gear, so that if a sudden order were given to *astern*, the engine is better prepared for carrying out that order.

The equalisation of cut-off at top and bottom of cylinder, for all positions of cut-off, is effected by causing one plate to move more per revolution of the spindle than the other; and in the case of the double spindle arrangement, the wheels on the nuts are so proportioned as to obtain the same result.

Inside Cut-off Valves.—So-called, because steam is cut off at the inside edges of the expansion valve. The eccentric is in this case, also, nearly in line and on the same side as the crank, so that the relative travel with the same throw of the eccentrics is greater than is the case when the expansion eccentric is opposite the crank, and consequently on the same side as the eccentrics of the main valve.

The variation in cut-off can, in this case, be effected in a manner similar to the last; but since the relative travel is so much greater, and since it would be inconvenient to spread out the valve so much, it is usually effected by varying the travel by means of a link, as already described, or by a link having one end connected to an eccentric and the other to a rod jointed to a fixed point on the foundation, or more usually on the shaft, and called the *dumb* rod, because of its similarity in position to the eccentric rod, without the longitudinal motion of the latter.

Piston Expansion Valves.—When the main valve is a piston valve, the expansion valve may be also a piston valve working within the main valve, and on the same principles as described for slide valves. This plan has been put into practice by several engineers, and although somewhat complex in structure, does, no doubt, work satisfactorily, and with little friction.

Expansion Valves for Compound Engines.—The Admiralty, in order to carry out the principle, that to work a compound engine with maximum economy there should be as little *drop* as possible, and that the power shall be evenly divided between the two cylinders, used to fit expansion valves to both cylinders, and carried this out in even very small engines, and thereby so complicated them as to render them anything but easy to keep in order and to work. Some English engineers, and very many French engineers, always provided an expansion valve to the high-pressure cylinder, so that when working at high grades of expansion, nearly the whole of the work is done in that cylinder, and at even moderate grades the power developed is very unevenly divided. It has been stated that to effect a cut-off earlier than half-stroke *efficiently*, a separate cut-off valve is necessary, but this is only strictly true when the full speed of the engine is maintained with such a cut-off. If full speed is obtained at a cut-off somewhat later than half-stroke, a *reduced* speed can be obtained *with efficiency* with an earlier cut-off by simply "linking up;" for the port area being suited to the higher speed, the reduction of opening on "linking up" is not materially felt at the reduced speed, and the consequent compression also adds to the economic working of the engine at high grades of expansion; also, if the valves have been so set that at full speed the work is evenly divided between the cylinders, so it will be, with but slight

variation, on "notching up" the links of both cylinders. Expansion valves are needless additions to the compound engine, unless the ratio of capacities of the cylinders is such as to demand an early cut-off in the high-pressure one at full speed, and when possible should be avoided, as all sources of possible breakdown or derangement should be. These valves are never fitted to triple expansion engines.

Eccentrics.—The sheaves, or, as they are sometimes called, pulleys, are made usually of cast iron, and, when possible, each is in one piece, bored out so as to fit the shaft on to which it is keyed. It is essential that it shall fit the shaft quite tightly, or otherwise it will soon become loose from the continual sudden application of the strain. When the couplings or flanges on the shaft do not admit of the sheaves being fitted in this way, it is usual to divide them on a line through the centre of the shaft at right angles to the line passing through the centre of shaft and centre of eccentric. The two unequal parts are securely bolted together, and keyed to the shaft on the line through the centres, so that the whole of the strain comes on the larger and stronger half, the lesser half acting only the part of a clamp to hold it to the shaft. Great care should be exercised in fitting the two parts of the sheave together, and also in "bedding" them on the shaft. Some engineers make all eccentric sheaves in parts, owing to the difficulty of fitting them to the shaft when in one casting. Sheaves are sometimes divided through the line of centres, so that each part is a half, but this is not so satisfactory a plan, as, from want of a connection at the small part, the joint is very apt to spring open and damage the strap, besides eventually causing the sheave to become loose on the shaft. When such a division is made there should be a connecting bolt as close to the shaft as possible, as well as one at the extremity, and also there should be a key to each half of the sheave and the shaft. When the eccentrics are very large, and have to drive heavy valves, it is advisable to make the small part, when divided, as first described, of wrought iron or cast steel.

The diameter of an eccentric sheave = 1·2 (throw of eccentric + diameter of shaft).

Breadth of the sheave at the shaft . .	= 1·15 × D + 0·65 inch.
,, ,, strap . .	= D + 0·6 inch.
Thickness of metal around the shaft . .	= 0·7 × D + 0·5 inch.
,, ,, at circumference . .	= 0·6 × D + 0·4 inch.
Breadth of key	= 0·7 × D + 0·5 inch.
Thickness ,, ...	= 0·25 × D + 0·5 inch.
Diameter of bolts connecting parts of strap	= 0·6 × D + 0·1 inch.

$$\text{D is found as before, and is} = \sqrt{\frac{L \times B \times p}{12{,}000}}.$$

Eccentric Straps are made generally in the form of a hoop, with lugs to connect the halves together, and with a base for the rod, if

it is not formed with the strap. When the face of the sheave is formed with small flanges on each side, the section of the strap is rectangular; but the more common practice is to make the strap with small flanges, so as to overlap the face of the sheave, and bear on parts on each side. The advantage of the latter plan is that the sheave is not necessarily broader than the strap, and the oil does not run off so readily when the engine is at work.

Some engineers prefer to turn the face of the sheave with a V shaped groove, and form the strap to fit into this; but it is not a good plan, owing to a small amount of wear permitting of very considerable side play (this again, though generally a fault, becomes a virtue with badly-fitted link-motions).

Eccentric sheaves have been made with a narrow projecting collar in the middle of the face, the straps having a groove turned to suit it. By this plan the straps are prevented from having side play, but the oil is not retained, as is the case with all the other methods.

The straps are usually made of bronze, or of wrought iron lined with bronze or white metal; but cast-iron straps give very great satisfaction, especially when of large size; cast iron lined with white metal also has been adopted by some engineers with success. Malleable cast iron and cast steel, lined with either brass or white metal, while having a strength beyond that of the cast iron, do not cost nearly so much as bronze or wrought iron for straps, and are now being largely employed in the mercantile marine.

When of bronze or malleable cast iron:—

The thickness of eccentric strap at the middle $= 0{\cdot}4 \times D + 0{\cdot}6$ inch.
" " " sides $= 0{\cdot}3 \times D + 0{\cdot}5$ inch.

When of wrought iron or cast steel:—

Thickness of eccentric strap at the middle $= 0{\cdot}4 \times D + 0{\cdot}5$ inch.
" " " sides $= 0{\cdot}27 \times D + 0{\cdot}4$ inch.

Eccentric Rods.—Unless these are very short indeed, it is better to make them separate from the straps, as then the breakage of either does not condemn both. They are made of wrought iron when long; steel cannot here be employed with advantage, as owing to its modulus of elasticity being so near that of iron, no reduction in size can be made.

The diameter of the rod in the body and lower end may be calculated in the same way as that of a connecting rod, the length being taken from centre of strap to centre of pin.

The diameter of eccentric-rod at the link end $= 0{\cdot}8\ D + 0{\cdot}2$ inch.

Eccentric rods are, however, often made of rectangular section, which is the correct form for the strains it has to withstand, but is not so economic to manufacture.

Reversing Gear should be so designed as to have more than

sufficient strength to withstand the strain *of both the valves and their gear at the same time* under the most unfavourable circumstances; it will then have the *stiffness* requisite for good working.

Assuming the work done in reversing the link-motion, W, to be only that due to overcoming the friction of the valves themselves through their whole travel, then if T be the travel of valves in inches; for a compound engine

$$W = \frac{T}{12}\left(\frac{L \times B \times p}{5}\right) + \frac{T}{12}\left(\frac{L^1 \times B^1 \times p^1}{5}\right);$$

and for an expansive engine

$$W = 2 \times \frac{T}{12}\left(\frac{L \times B \times p}{5}\right); \text{ or } \frac{T}{30}\left(L \times B \times p\right).$$

To provide for the friction of link-motion, eccentrics, and other gear, and for abnormal conditions of the same, take the work at one-and-a-half times the above amount.

To find the strain at any part of the gear having motion when reversing, divide the work so found by the space moved through by that part in feet, the quotient is the strain in pounds; and the size may be found from the ordinary rules of construction for any of the parts of the gear.

CHAPTER XIV.

VALVE DIAGRAMS.

Motion of the Piston.—Fig. 91 illustrates an ingenious method proposed by Professor Zeuner for finding the position of the piston at any position of the crank, and should be used always when constructing a valve diagram, in order to find the points of cut-off, release, compression, &c.

The following is the construction of such a diagram:—Draw a line T F, and on it take a middle point C; cut off a part C D, equal to the radius of the crank (to any convenient scale), and a part D T equal to the length of the connecting-rod.

With D as centre, and D T as radius, draw a circle cutting the initial line at E. With C as centre, and C T as radius, draw another circle; and with C as centre, and C E as radius, draw a third circle. To find the position of the piston, with respect to its extreme position, for a position of crank C R when it has moved through an angle D C R from the "dead" point C D; produce C R to cut the circles at B′P T′; then the piston has moved through a space T′P in turning the crank through the angle D C R, and it is distant

from the other end of its stroke by a space P B'. The correctness of this construction is easily seen, by supposing an engine whose piston is connected directly to the crank-pin (such as the Trunk engine), to be turned around about its shaft, while the

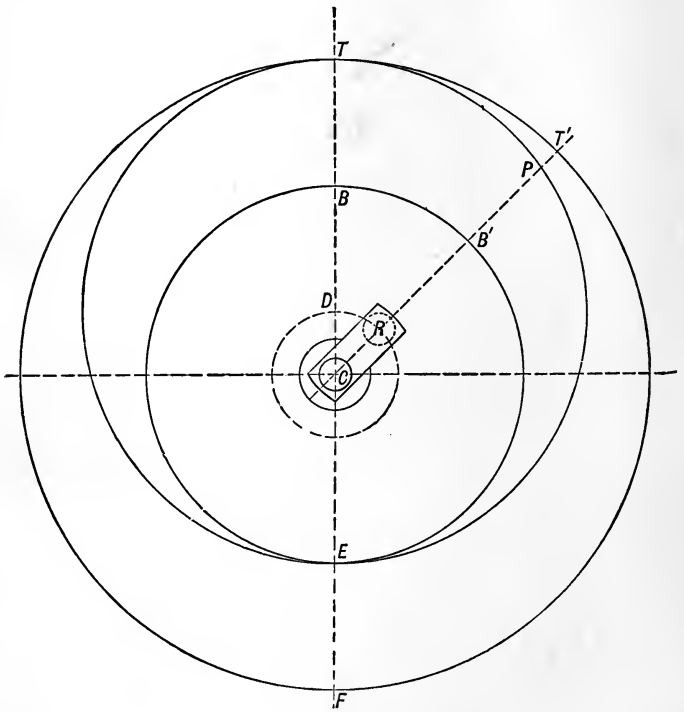

Fig. 91.—Diagram of the Piston Path.

crank remains stationary in the position C D. The circle T T'F represents the path of the back end of the cylinder, and B B'E that of the front end, since the cylinder is turned about the point C; the path of the piston will be on the circle T P E, since it is held at the same distance from the crank-pin D.

Diagram for the Common Slide-Valves.—(1.) Given the travel of the valve, amount of the lead or opening of valve at commencement of stroke, and the point of cut-off, to find the lap of the valve and the position of the eccentric, &c. These are the conditions generally predetermined in every-day practice.

Fig. 92.—Draw a straight line, whose length, A B, is equal to the travel of the valve, and on it as diameter draw a circle, the centre of which is at C. Draw a line C E, so that A C E is the angle through which the crank has to move to arrive at the position of cut-off (this is to be obtained by drawing the piston diagram

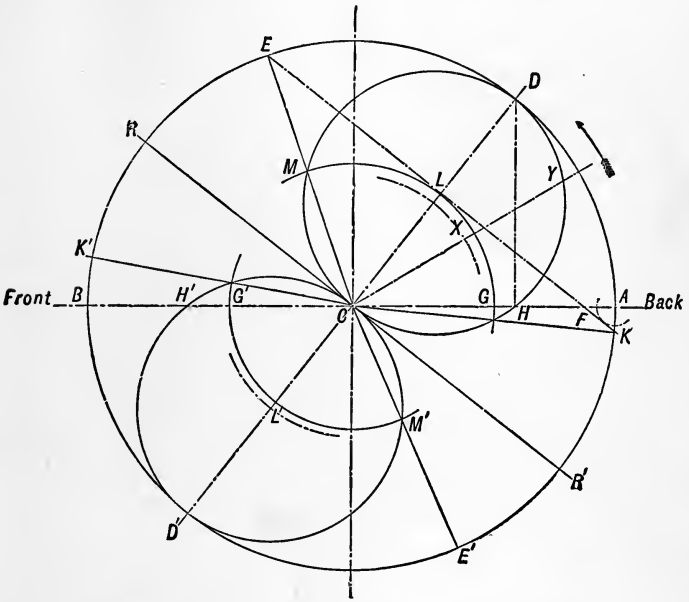

Fig. 92.—Zeuner's Diagram for the Common Valve Motion.

outside the circle A E B). With A as centre, and a radius A F equal to the *lead*, draw part of a circle, and through E draw a line touching this circle and cutting the original circle at K.

Through C draw a line C D perpendicular to E K, and cutting it at L. This line C D bisects the angle K C E.

C L is the amount of lap required, and B C D is the angle between the crank and eccentric to obtain the cut-off required; and since C D is the half-travel of the valve, L D is the maximum amount of opening of the port.

To extend the usefulness of the diagram, on C D as diameter, draw a circle, and with C as centre, and L as distance, draw the arc of a circle G L M, which is called the lap circle. The part G H intercepted by these circles, is equal to A F, and represents the *lead* or opening when the crank is in position C A; X Y likewise

represents the opening of the port, when the crank is in position C Y.

To determine the operation of the valve at the other end, it is necessary to produce D C to D′, and on C D′ as diameter, draw a circle. Let H′G′ be the "lead" at the other end of the valve; with C as centre, and C G′ as radius, draw another lap circle, cutting the circle C D′ at M′ Through C M′ draw a line C E′. Then C E′ is the position of crank at cut-off, it having moved through the angle B C E′, and C G′ is the amount of lap required.

(2.) If, however, the *travel*, *lap*, and *lead* are given to find the position of eccentric and cut-off, the following is the construction :—

Draw on A B as diameter, the circle as before. Cut off C G equal to the lap, and G H equal to the lead. At H, erect a perpendicular to A B, cutting the circle at D. Join C D, and on it as diameter, draw a circle; with C as centre, and C G as radius, draw the lap circle, cutting the circle C D at M. Draw a line through C M, cutting circle A D B at E.

Then C E is the position of cut-off, and B C D is the angle between the crank and eccentric.

(3.) Given the *travel*, *lap*, and *position of eccentric*, to find the cut-off, lead, &c. Let B C D be the angle between the crank and the eccentric. Draw the travel circle as before, and on C D as diameter draw the circle cutting A B at H. Draw the lap circle G L M, then C M E is the position of cut-off, and G H is the lead.

The position of the crank when the valve commences to open is C K, or at the angle A C K, with its initial position.

If the valve has no inside lap, that is, the ports are both just closed to exhaust when the valve is in mid position, the position of release is at C R, a line at right angles to C D; and the position at which compression takes place is C R′, also at right angles to C D.

If, however, the valve has *inside* lap amounting to, say, C G′, release will not take place till the crank is at C K′.

If, on the other hand, the valve is cut away on the inside so as to have negative lap to the amount of C M, then release will take place at C E, and compression at C K.

If the inside lap is less than these amounts, the position of release and compression can be found by drawing an inside lap circle with a radius equal to the lap, and through the points where it cuts the circles on C D and C D′, the lines drawn through C and those points of intersection will give the positions of crank.

Travel of Valve.—It is usual to fix the travel of the valve before determining any further particulars, as so many things depending on this have often to be considered before there is leisure to finally decide the lead, lap, &c.

It will be seen, on reference to the diagram, that the opening to steam will vary with the travel, and if the *area* of opening is fixed from certain considerations before-mentioned, it is an easy matter to calculate how much the valve must open to give that area. Now

the opening, together with the lap, is equal to half the travel, and with the same *positions* of "lead" and cut-off, the opening will be a constant ratio of the travel. This ratio can be determined by drawing a preliminary diagram with an assumed travel of valve. Let R be this ratio, and Q the amount of opening desired; then

$$\text{Travel of valve} = Q \div R.$$

Since it is usual to design the ports of a steam cylinder so that the flow of steam when exhausting may not exceed a certain velocity, it is evident that the port should open fully for that purpose; hence the travel of the valve, when there is no inside lap, should not be less than twice the length of the port, and is generally about $2\frac{1}{2}$ to 3 times the length of the ports.

The less travel the valve makes, the less work is absorbed in moving it, as the work is very nearly proportional to the travel. Double- and treble-ported valves are resorted to with the object of reducing the travel, as by them double and treble openings are obtained, and the travel may, therefore, be one-half and one-third that of the common valve with single ports.

"Lead."—The amount of lead given to the valve is generally decided arbitrarily and according to judgment or prejudice. It will be seen by referring to fig. 92 that with the same "lap" an earlier cut-off is obtained by moving the eccentric farther from the crank, but at the same time increasing the "lead;" if the earlier cut-off is to be obtained without altering the "lead," the lap must be increased and the eccentric moved; but if the lap be increased, the opening is decreased, and the resistance at the port thereby increased. If, therefore, an early cut-off is required without the aid of an expansion valve, the "lead" must be great, or the travel great, to get sufficient opening to steam, or the lead and travel must be both larger than would be the case with a later cut-off.

The considerations which should operate in deciding the amount of lead are the speed of the engine and the weight of moving parts compared with the piston area. The momentum of the piston and rods should, if possible, be absorbed in compressing the steam remaining in the cylinder when the valve closes to exhaust; and were this always the case, there would be no need for fresh steam to enter the cylinder until the piston was at the end of its stroke; but this, under ordinary circumstances, seldom occurs, and if no fresh steam were admitted "to form a cushion" for the piston, there would come a considerable jar on the bearings, &c., at the end of every stroke, owing to the strain increasing the displacement of the shaft in its bearings, and the sudden application of the load when the valve opens, causing its replacement with considerable force. This action is also observable when there is considerable "lead" without adequate "compression;" and although the "hammering" is usually attributed to excessive "lead," it is really due to want of compression, for on "notching-up" the link, it generally ceases.

notwithstanding that the lead is then thereby very considerably increased.

Long-stroke engines may have considerably more lead than those of the same cylinder capacity with shorter stroke, as the weight of moving parts is not less and sometimes more, the piston velocity is more (with the same number of revolutions), while *the piston area is less.* Fast-running engines may also have more "lead" than slow-running ones, as the element of time bears on the operation of the steam. Again, if owing to the valve motion the valve opens slowly, the period of admission may be earlier than should be the case with a quick opening one, as the wire-drawing at the commencement of admission will produce a similar effect to compression.

The amount of lead at each end will vary for two reasons; first, the cut-off at each end being effected by the same eccentric, any variation in position of cut-off must be obtained by varying the lap, and any variation in the lap will cause an inverse variation in the lead; secondly, the lead should be less at that end of the valve remote from the gear, as the adjustment after wear of the latter tends to increase to the "lead" at that end. If the cut-off is equal at both ends the laps will vary, that at the end of a directing engine remote from the shaft being more than that at the other. With the ports as generally found in every-day practice, and with such travels as are practicable, the cut-off at the end near the shaft should be earlier than at the end remote from it, as the larger opening got by the decreased lap causes a fuller indicator-diagram at that end. For these reasons many engineers arrange so that the lead at the back or top end is only half that at the front or bottom end.

When a compound engine is to be worked with a cut-off at or before half stroke without expansion valves, it is best to arrange the valves to cut off at about 0·6 of the stroke with very small "leads," so that when required the engine is easily handled, and when working at its normal speed the earlier cut-off is obtained by notching up without excessive leads.

Inside Lap.—The effect of positive lap on the exhaust side of the valve is to retard the period of release, and to increase the compression by accelerating the closing to exhaust. The effect of negative lap is, of course, the reverse of this, and is also to give a full opening to exhaust sooner than would be the case with positive lap. A large amount of lap, either negative or positive, is necessary on the inside of a valve to materially change the periods of release and closing to exhaust, because just then the valve is moving at its quickest speed; but a small amount of negative lap makes a considerable difference to the amount of opening to exhaust at the end of the stroke, when the steam should exhaust wholly from the cylinder. There is no advantage in retaining steam in the cylinder to the very end of the stroke, as the effort of the piston on the crank is ineffective to produce good results, and any forward pres-

sure only serves to increase the difficulty of bringing the piston gently to rest by means of cushioning, &c., and this is especially true of quick-moving engines, whose steam ports are comparatively small.

If the valve has negative lap on the exhaust side, it is manifest that at a certain period there is a communication between both ends of the cylinder; when the negative lap is considerable, and the ports small, the effect of such a communication is to fill the exhausted cylinder on one side of the piston with the steam released from the other side, just before the valve closes to exhaust, and is seen very distinctly on the indicator-diagrams, in the form of a sudden rise of pressure at the commencement of the compression. In cases of this kind, ample compensation is made for the retarding of the compression by negative lap in the increase of back pressure at the commencement of compression.

The high-pressure valve of compound screw engines should always have a considerable amount of negative inside lap, to allow of a continuous and easy flow of steam during exhaust. The amount of negative lap on the inside should be *always* less than the outside lap of the valve, otherwise there will not be enough bar to cover the port, so that steam can pass from the valve-box to the exhaust just as the valve is opening and shutting; for a quick-running compound engine there should be such lap that exhaust commences from the high-pressure cylinder at 0·85 of the stroke; and with a slow-working paddle engine not later than 0·95 the stroke.

Effect of "Notching Up."—When an engine is fitted with link-motion or other means of reversing it without throwing "out of gear," so that the mechanism which would produce stern motion can be made to effect that producing ahead motion, a certain variation in the cut-off, release, &c., can be effected by what is called "notching up." The origin of this term is clearly traceable to the locomotive, whose reversing lever is held in place by a sliding-bolt fitting into a *notch* in a quadrant provided for the purpose.

When the link is notched up so that the block works the valve from a point between its two extreme positions on the link, the motion is one due to the combined effort of both eccentrics, and in order to examine clearly the operation of the valve under these circumstances, it is necessary to find the position, and throw off the *equivalent eccentric*. To determine this exactly is somewhat difficult, but a very close approximation can be made by the method suggested by Mr. Macfarlane Gray, as follows:—

Suppose the link (fig. 94) to be notched up to a point M, or in other words, the link moved so that the link block is distant M T from the point at which the eccentric-rod is attached to the link.

Draw the valve diagram (fig. 93) due to the position and throw of the eccentrics of fig. 94; and through D D′ draw the arc of a circle with a radius found as follows:—

Radius = length of eccentric-rod from centre to centre × half the

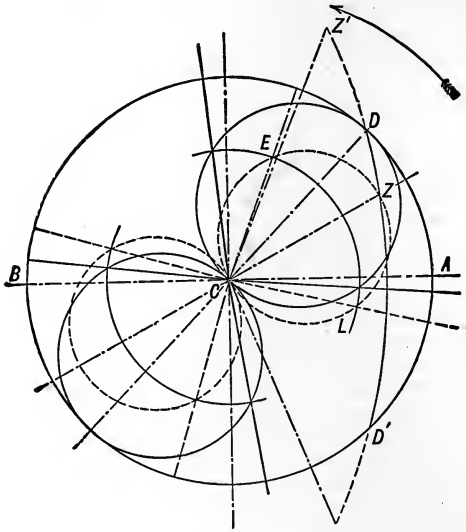

Fig. 93.—Diagram showing the Effect of "Notching up."

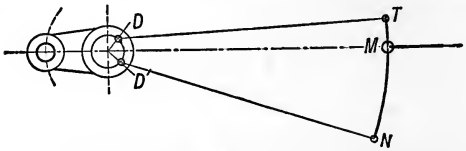

Fig. 94.—Link Motion "Notched up."

distance between the centres of the two eccentric sheaves ÷ the distance between the centres of eccentric-rod pins on the link.

$$\text{Referred to fig. 94,} \quad \text{Radius} = \frac{\text{D T} \times \text{D D}'}{2\ \text{T N}}.$$

On this arc, take a point Z, so that $\frac{\text{D Z}}{\text{D D}'} = \frac{\text{T M}}{\text{T N}}$.

Join C Z, and on it as diameter draw a circle, cutting the lap circle at points L and E; through C L and C E draw lines which represent the position of opening and closing respectively at one end of the valve when the link is notched up to the point M.

It will be seen that the effect of notching up is the same as would be produced by an eccentric whose position on the shaft is at the angle B C Z with the crank, and its eccentricity C Z; that the open to lead is earlier, and the magnitude of the lead considerably

increased; that the reduced travel gives a smaller opening to steam, and that the cut-off is earlier; likewise, by examining further, it can be seen that release takes place sooner and compression commences earlier than when in full gear.

When the eccentric rods are arranged as shown in fig. 94, they are said to be *open*, or it is an *open rod link-motion*; if, on the other hand, D N and D′ T be joined, it is said to be a *crossed rod link-motion*. When the link motion has crossed rods, the arc D Z D′ should be convex to the point C, that is, the centre of curvature is on the side A.

When the rods are crossed, an earlier cut-off is effected by notching up without materially altering the *lead*, and, in most cases, with a very early cut-off there is only a very small *lead*, smaller even than when in full gear. But the travel is reduced very rapidly by notching up, giving a corresponding reduction of opening to both steam and exhaust; so that, altogether, crossed rods are not so convenient as open ones for working expansively by notching up the link, and are very seldom so fitted.

The valve diagrams, when the link-motion is such as shown in fig. 94, are constructed on the same principle as for notching up, and the position of the eccentrics and their throw are determined by producing the arc D D′ (fig. 93), and taking a point Z′ *beyond* D, so that

$$\frac{Z'D}{D\,D' + 2\,Z'D} = \frac{T\,M}{T\,N}.$$

Join C Z′.

Then C Z′ is the eccentricity of the sheaves, and B C Z′ is the angle between them and the crank.

Expansion Valve on an Independent Face Central Position Ports closed.—The valve in this case is working under precisely the same conditions as a common slide-valve, and the same construction of diagram as on p. 301, for fig. 92, holds good.

Expansion Valve on an Independent Face, Central Position Ports open.—Let C O′ (fig. 95) be the position at opening of valve, when set at earliest cut-off, which should be somewhat before that of the main valve, and C E the position at the earliest cut-off which is required. Bisect the angle O′C E by the line C T, and make C T equal to half the maximum travel of the valve.

On C T as diameter, draw a circle cutting C E at H.

Produce C T to T′, making C T′ = C T.

On C T′ as diameter, draw a circle cutting C O at G.

Then C H is the distance of the cutting-off edge of the valve from the edge of the steam port; that is, C H = $b\,h$; and the lap of valve $b\,d$ = C H − length of port.

The width of the bar $a\,b$ must not be less than C T − $b\,d$, and should be = (C T − $b\,d$) + $\frac{1}{4}$ inch.

For the other end of the valve, a similar construction will give the required results.

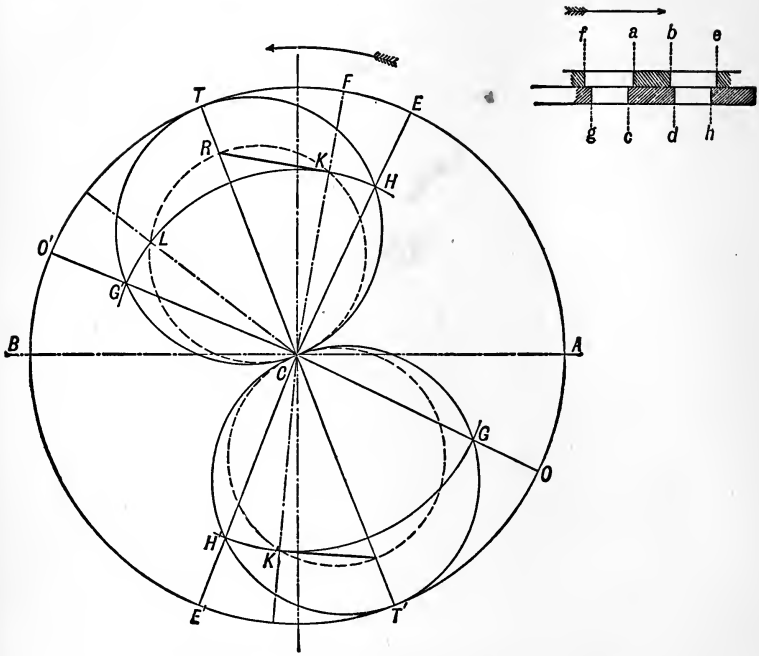

Fig. 95.—Diagram for an Independent Expansion Valve.

Let C E′ be the position of cut-off at the other end of the cylinder, cutting the circle C T′ at H′.

With C as centre, and C H′ radius, draw a circle cutting the circle C T′ at G; through C G draw a line, then C G is the position at which the valve opens again

Hence $a\,g = C\,H'$; and the lap $a\,c = C\,H' -$ length of port.

Again, the width of bar $a\,b$ must not be less also than $C\,T - a\,c$; and should be $= (C\,T - a\,c) + \frac{1}{4}$ inch.

The bar $c\,d = a\,b +$ lap $b\,d +$ lap $a\,c$.

To find the reduction in travel for a later cut-off at position C F cutting the port circle at K. Draw K R perpendicular to C F cutting C T at R. On C R as diameter, draw a circle cutting the lap circle at L. C R is the half travel of valve. C L is now the position at which the valve opens again, which should not be before the main valve is closed to steam.

In arranging an eccentric and gear for this valve, care must be taken in setting it that the expansion valve will open at the earliest cut-off before the main valve opens, and that at the latest cut-off it does not open again till the main valve is closed. When

the expansion valve spindle is in the same plane with the piston-rod, and the gear is direct from the eccentric to the valve-rod, the eccentric should be set at the angle B C T with the crank on the same side as the *head-going* eccentric.

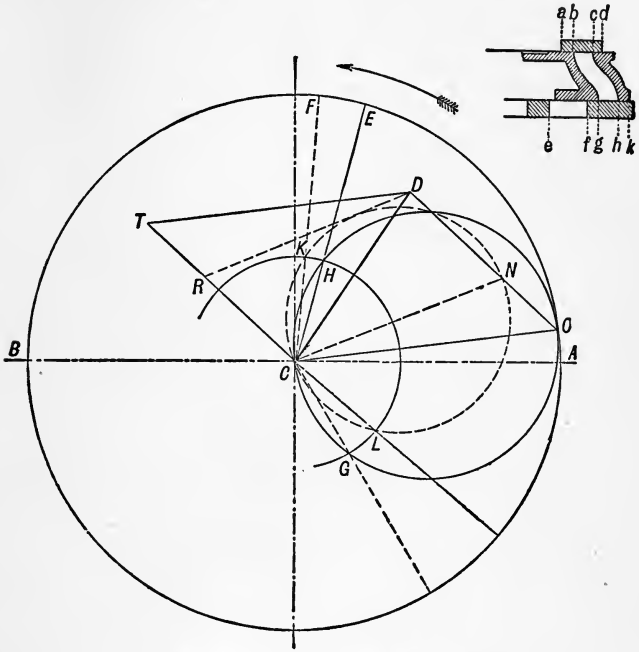

Fig. 96.—Diagram for an Expansion Valve.

Expansion Valve Working on the Back of the Main Valve, Cutting off at the inside edge, and Variation in Cut-off made by varying the Travel.—Let A (fig. 96) be the dead point of the crank at the back of the stroke, and C E the position of earliest cut-off. B C D is the angle between the crank and *head-going* eccentric, and C D its eccentricity. Cut off C H equal to the lap of the expansion valve, or distance of the inner edge of expansion valve from inner edge of steam port in the back of the main valve, when the expansion valve is in its mean position with respect to the main valve Draw the lap circle H G as before. From H draw a line H O perpendicular to C E with D as centre and the half travel (absolute) of the expansion valve as radius, draw the arc of a circle cutting H O at O. Join D O and C O; on C O as diameter, draw a circle, which will pass

through H, since C H O is a right angle. Complete the parallelogram C D by drawing D T parallel to O C, and C T parallel to D O. Then C O is the half-travel of the expansion valve relative to the main valve; B C T is the angle between the crank and the expansion eccentric, or T C D is the angle between the expansion eccentric and the head-going eccentric.

By producing O C to O′, and on C O′ drawing a circle, &c., the cut-off, lap, &c., may be investigated for the other end of the valve.

To find the effect of shortening the absolute half-travel to C R. Since the position of the eccentric remains unchanged, join R D, and through C draw C N parallel to R D, and cutting O D in N. On C N as diameter draw a circle cutting the lap circle at L and K.

Through C L and C K draw lines which are respectively the positions of opening and cut-off of the expansion valve for the back end, and C N is the relative half-travel.

It will be seen that when the travel of the expansion valve is nothing, that the relative half-travel is C D, and that if the lap is the same as that of the main valve, the cut-off and lead will be the same also. For this reason it is customary when designing a valve of this kind, which may have to go out of gear when at full speed, or for some particular purpose, to make the lap the same as that of the main valve, and for practical reasons to make the travel the same also.

To find the effect of the expansion valve when in stern gear, join T to D′ of the stern-going eccentric, and complete the parallelogram C D′ as before.

It will be seen also, that with this kind of expansion valve, the opening to steam is never less at the expansion valve ports than at the cylinder ports.

Expansion Valve Working on Back of Main Valve, and Cutting off at Outside Edge.—Let A (fig. 97) be the dead point of the crank, as before, at back of stroke, and C E the position of earliest cut-off required, B C D is the angle between the crank and the head-going eccentric, and C D its eccentricity. From C E cut off a part, C H, equal to the opening to steam of the main valve at that end, or such as would give sufficient opening by the rules as laid down already. From H draw a line, H O, perpendicular to C E. With D as centre, and D O a radius equal to the eccentricity of the expansion eccentric, draw the arc of a circle cutting H O at O. Join C O, and on it as diameter draw a circle, which will pass through H, since C H O is a right angle.

Complete the parallelogram C D by drawing D T parallel to C O, and C T parallel to O D.

Then C O is the half-travel of the expansion valve with respect to the main valve; B C T is the angle between the crank and the expansion eccentric, and T C D the angle between the expansion eccentric and the head-going one of the main valve. C H is the distance of the edge of the expansion valve (fig. 98) from the outer or cutting-off edge of the port on the back of the main valve,

when the expansion valve is in its mean position with respect to the main valve.

If the expansion eccentric is set *exactly* opposite to the crank, so that the point T is on the line A B, then the cut-off is the same in *stern-going* as in *head-going* gear. If, however, it is set as shown in fig. 97 so as to be nearer the stern-going eccentric, the cut-off is later in *stern-going* than in *head-going gear*, and the relative travel of the expansion valve is greater.

If it be required to cut-off at a later period, as at C K, the expansion valve must be so moved that, when in mean position with respect to the main valve, the cutting-off edges are apart by a distance equal to C K; that is, the valve is moved towards the middle by a distance M N or C K – C H.

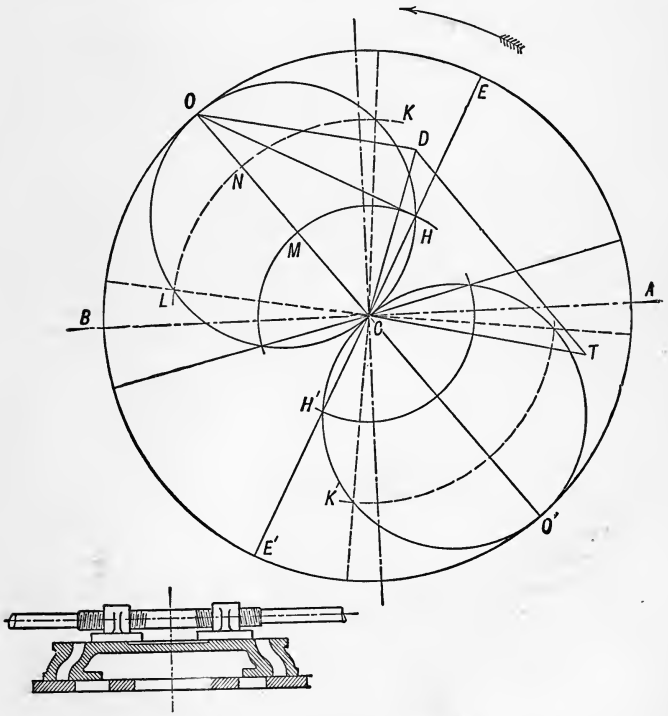

Fig. 98.—Expansion Valve.

Fig. 97.—Diagram for an Expansion Valve.

The laps, cut-off, &c., at the other end of the valve may be investigated in a similar way by producing O C to O', making C O' equal

to C O, and on it as diameter drawing a circle cutting the required position of earliest cut-off C E′ at H′.

C H′ is then the distance apart of the cutting-off edges of the valves at the other end. Also, if a later cut-off C K′ is required when C K is the cut-off at the other end, the valve must be moved towards the middle by a space equal to C K′ – C H′.

If C K be the position of latest cut-off, care must be taken that the arrangement is so designed that the re-opening of the port at C L is *after* the main valve has cut off to steam.

In order to obtain as large a relative travel as possible to the expansion valve, it is customary to make the angle B C D about 100°, so that the main valve has of necessity very little lap and small lead, and consequently there is a late release and a very small amount of compression.

In speaking of C D as the eccentricity, and B C D the angle of the head-going eccentric, it must be understood that an eccentric acting directly and in line with the main valve spindle is meant. If the valve gearing is such that the eccentric is otherwise, then C D is the eccentricity and B C D is the angle of the *equivalent eccentric*.

This remark applies likewise to the case of the expansion valve (fig. 98) cutting-off at the inside edge.

Construction of Valve Diagrams.—In making a diagram for an engine, the piston diagram (fig. 91) should be drawn first to such a scale as to be well clear of the valve diagrams. The main-valve diagram should then be drawn full size in black ink, and the expansion-valve diagram on it in red, or other distinctive colour. The effect of each valve can then be traced both separately and conjointly.

CHAPTER XV.

PROPELLERS.

THE fundamental principle on which all propellers act, is that the reaction caused by projecting a mass of water in one direction produces motion of the ship in the opposite direction.

If a ship is at rest with respect to the water in which it floats, and is to be set in motion by a stream of water projected from it, the inertia must be first overcome, and until this is accomplished the stream of water issues at the same velocity with respect to the water that it does to the ship, and its *slip* or motion with respect to the water is, therefore, equal to 100 per cent. of its motion with respect to the ship. If the stream issues at a constant velocity from the ship, its velocity with respect to the surrounding water

will decrease as the motion of the ship increases. The speed of the ship will increase until the maximum speed due to the propelling effort is arrived at, when it will remain constant so long as the stream continues to issue at a constant rate. The whole of the effective propelling force is then employed in overcoming the resistance of the ship, and that resistance multiplied by the speed of the ship must be equal to the net effective power of the engine.

Let V be the velocity of the stream of water with respect to the ship, and v the velocity of the ship, then:—

The velocity of the stream with respect to the water $= V - v$.

This is called the *slip* of the stream, or the velocity with which it moves over the water on which it is projected.

$$\text{The percentage of slip is therefore } \left(\frac{V-v}{V}\right)100.$$

The propelling effect of this stream of water will depend on the mass projected in a given time; and if it is issuing from an orifice, it will depend on the area of the orifice and the velocity of issue. If the area of the orifice is decreased, the velocity must be increased, and any increase of velocity of issue will cause an increase of slip; *per contra*, any increase of orifice will permit of a decrease of velocity, and consequently a decrease of slip.

If the water be taken from the surrounding water, *whose velocity with respect to the ship* is v, the velocity imparted by the machinery is then $(V-v)$, which is the *slip*.

Then if M be the mass of water projected in a second, and $(V-v)$ its velocity in feet per second, and W its weight in pounds, and g its gravity $(=32)$.

$$\text{The momentum} = M\,(V-v) = \frac{W}{g}\,(V-v).$$

Now, if A is the area in square feet of the issuing stream, and V is the velocity of issue, the weight of a cubic foot of sea-water being 64 lbs.,

$$\text{Weight of water projected in a second} = A \times V \times 64.$$

Therefore—

$$\text{Momentum of stream} = \frac{A \times V \times 64}{32}\,(V-v)$$
$$= 2\,A \times V\,(V-v).$$

And this is the measure of the propelling force, and is equal to the resistance of the ship in pounds.

Now the stream of water may be projected from the ship by means of a common pump, or by a centrifugal pump or turbine, as on Ruthven's plan, as carried out in H.M.S. "Waterwitch," or by an instrument like the pulsometer, which is called by the inventor the *Hydro-motor*. In either case, there must be an inlet valve and

pipe, and an outlet valve of some kind and pipe. If the stream is a large one, large pipes must be employed, or else the water must be projected at a high velocity. Since very large pipes are not always admissible, high velocity must be resorted to, and the efficiency is thereby very much impaired. To reduce the friction of the pipes, &c., as much as possible, they are shortened, until, finally, the propelling pump is placed close to the water, and pipes avoided altogether. A step farther is taken, and the pump, in the form of a screw, is placed outside the ship, so that neither entry nor emission orifice shall check the flow of water. When this has been accomplished, it remains only for inventors to enclose it in a tube "to check the loss from the centrifugal action of the water," to place it farther into the dead wood, "to protect it from danger," &c., and, finally, to place it in the hold with inlet and outlet pipes, &c., as at first.

Jet Propulsion—Ruthven's Plan.—The propeller in this case consists of a turbine wheel, working on a vertical axis near the middle of the ship, and enclosed in the usual case. Water is supplied to it from an orifice in the skin of the ship, which should be so placed, when possible, that the flow of water due to the onward motion of the ship is not checked in any way, but allowed to go direct, and have the additional velocity imparted to it by the centrifugal action of the wheel. But as such conditions are in practice almost impossible, the efficiency of this propeller is very much impaired by the check given to the water at the inlet orifice, and by the friction in the pipes and passages. The discharge from the turbine should be, if possible, quite direct in the opposite direction to the motion of the ship; but here again is a practical difficulty, for if the delivery pipe is through the stern, a separate pipe will be needed to pass through the bow to obtain the sternward motion. In H.M.S. "Waterwitch" there were two delivery pipes, one to each side, with directing valves and nozzles, so that the stream could be diverted ahead or astern on either side independently. This gave the ship a degree of handiness possessed by no other vessel afloat, but reduced the efficiency of the propeller below that of both the screw and paddle.

There is one other very strong objection to this form of propeller beyond its inefficiency, and that is, the enormous size of the pipes and valves for a moderate velocity of flow; the objection becomes an insurmountable one when the power is such as to obtain even the moderate speed of 12 knots, for the holes in the skin of the ship are then of so large a size as to require special construction in their neighbourhood, and the pipes so enormously large as to occupy more space than can be well afforded. The weight of water, too, is so considerable as to take very much from the carrying powers of the ship.

There are certainly some very good features in the jet-propeller for special circumstances, such as absence of vibration and "thud," freedom from accident to the propeller from exposure to shot or

collision, and capability of handling the ship from on deck without stopping the engines; but in actual practice, from the causes indicated above, the efficiency is very low, and the cost and room occupied very large.

Hydro-motor.—In this plan there is no real engine or propeller; the water is simply ejected from two cylindrical chambers alternately by the direct pressure of the steam on its surface. When the one chamber is emptied, steam is shut off from the boiler, and allowed to escape to a condenser; the water flows quickly into the vacuous chamber, and, when it fills, its communication is closed to the condenser and opened to the boiler. A ship has been fitted out on this plan, and proved fairly successful, for the condensation of steam on the walls of the wet chamber is very slight, owing to the short time of exposure, and that on the surface of the water equally small, for there is no convection to carry away the heat into the body of the water. The steam was also worked expansively, and the inventor claims for it quite as high an efficiency, judged by coal consumption, as that of a good compound screw engine. The walls of the chambers are lined with wood, so that there may be as little loss as possible by conduction.

However much the loss from such causes, as stated, may be set off by the gain from absence of mechanism (and it is possible that the saving may even outbalance the loss), there still remains the same objection which militates so strongly against jet propulsion—viz., the large pipes, valves, and passages.

The plans for ejecting a stream of water by means of pistons, floats, &c., are very numerous, and since most of them have been re-invented many times over, the patents are legion. None of them have, however, been proved to be equal in efficiency to the commonest of screws, and many of them are most egregious mistakes from want of knowledge of first principles.

Common Paddle-Wheel, or Wheel with Radial Floats.—This, the simplest and oldest form of paddle-wheel, consists essentially of a wrought-iron frame wheel, having two or more sets of arms fitted to a cast-iron "hub" or "boss," and connected by rims and cross-stays so as to have the necessary rigidity and interdependence of the several parts. Flat boards are secured in a radial direction to the arms by hook bolts, so that when the wheel is turned around, the floats, as these boards are called, drive a stream of water through the still water in the opposite direction to that which the ship takes. If the water were unyielding, the action of the wheel would be analogous to that of a pinion on a rack in the mangle motion, so that the motion onward of the ship per revolution would be 3·1416 × the diameter of the *pitch circle* of the floats or circle of centres of pressure. But as the water yields to the pressure of the float, the action is the reverse of that of an undershot radial water-wheel; the float drives a stream of water equal in area of section to its own area, and with a velocity $(V - v)$, as before.

Let D be the effective diameter of the wheel, A the area of a pair of floats (one on each wheel acting at once) in square feet. R the revolutions of the wheel per second, and v the speed of the ship in feet per second.

Weight of a cubic foot of sea-water = 64 lbs.

The velocity of the floats per second $V = \pi \times D \times R$.

The quantity of water operated on in a second = $A (\pi \times D \times R)$ cubic feet, or $64 (A \times V)$ pounds.

The velocity imparted to the water is $(V - v)$.

Taking gravity as 32,

$$\text{Momentum of water} = \frac{64 (A \times V)}{32} \times (V - v)$$
$$= 2 (A \times V) \times (V - v).$$

which is, as before explained, equal to the resistance of the ship and the force on the floats, and consequently the *thrust* of the shaft on the bearings on the side of the ship.

But this is only strictly true when the float is just immersed and vertical, as there are other actions which seriously interfere with the efficiency of the radial paddle-wheel.

The floats of a radial paddle-wheel of necessity enter the water obliquely under all circumstances, and when the ship is deeply laden, so that the wheel is deeply immersed, the obliquity is very great. The disturbance consequent on this is such as to raise a stream of water nearly parallel to the float, which is finally projected past the emerging floats and astern of the wheel, and appears to come from them, and so giving rise to the generally received opinion, that the cascade of water usually observed in wake of a radial wheel, is that carried up by the floats in leaving the water. Again, the floats do raise a certain amount of water by their obliquity to the surface of the water, and thereby divert very considerably the "race" set up by the float when vertical.

On this account, it is impossible to estimate with any degree of accuracy the actual momentum of the race of water from a radial wheel. Paddle-wheels with radial floats are now but seldom employed, and only in tugs where prime cost is a paramount consideration, or in small river steamers having comparatively large diameters of wheel with a small amount of dip, or for service in barbarous countries, where simplicity and a minimum risk of derangement is a necessity.

The *effective diameter* of a radial wheel is usually taken from the centres of opposite floats; but it is very difficult to say what is absolutely that diameter, as much depends on the form of float, the amount of dip, and the waves set in motion by the wheel. The slip of a radial wheel is from 15 to 30 per cent., depending on the size of float.

The area of one float may be found by the following rule:—

$$\text{Area of one float} = \frac{\text{I.H.P.}}{\text{D}} \times \text{C}.$$

D is the effective diameter in feet, and C is a multiplier, varying from 0·25 in tugs, to 0·175 in fast-running light steamers.

The breadth of the float is usually about $\frac{1}{4}$ its length, and its thickness about $\frac{1}{8}$ its breadth. The number of floats varies directly with the diameter, and there should be one float for every foot of diameter.

Example.—To find the particulars of the floats for a radial wheel 16 feet effective diameter, the I.H.P. of the engines being 400.

$$\text{Area of one float} = \frac{400}{16} \times 0{\cdot}25 = 6{\cdot}25 \text{ square feet.}$$

$$\text{Length} \times \frac{\text{Length}}{4} = 6{\cdot}25.$$

$$\text{or Length} = \sqrt{4 \times 6{\cdot}25} = 5 \text{ feet.}$$

$$\text{Breadth} = \frac{5}{4} = 1{\cdot}25 \text{ feet, or 15 inches.}$$

$$\text{Thickness} = \frac{15}{8}, \text{ or } 1\tfrac{7}{8} \text{ inches.}$$

Number of floats, 16.

The floats are usually made of elm, although any tough strong wood which withstands the action of water will do equally well. They are commonly rectangular in form, with the corners rounded off and the dipping edges bevelled at the back, so as to enter the water as easily as possible.

To avoid the shock of entry, the floats are sometimes shaped so that the middle of the float enters first, the sides being cut away taper for that purpose. To avoid the oblique action of the float on entry, the arms are sometimes bent so that the float is perpendicular before arriving at the point immediately below the centre of the wheel; it is consequently more oblique on emerging than that of the common wheel, and tends to increase the lifting of the water then.

The wheel is also sometimes made with the floats inclined to the axis, so as to throw a stream of water away from the hull of the ship when going ahead, and it is said that such wheels are more effective than the ordinary ones.

Feathering Floats.—It is easily seen that the larger the diameter of the wheel with radial floats, the less is the obliquity at entry and exit; but independently of the objection that a larger engine is required to drive the larger wheel with the same percentage of slip, there is always the practical difficulty of arranging for a wheel of large diameter without seriously interfering with the ship's design.

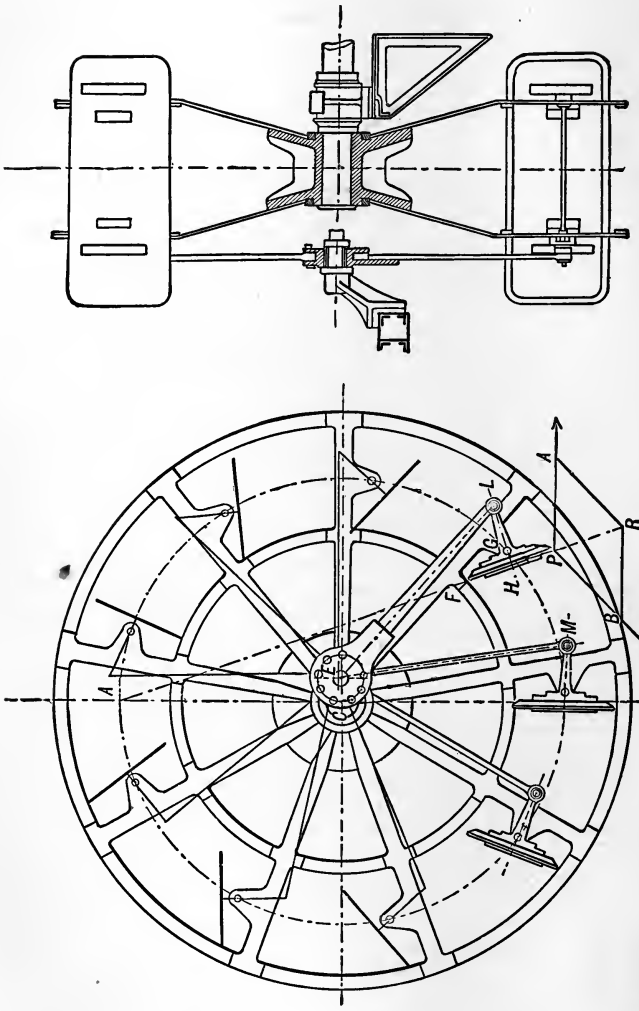

Fig. 99.—Paddle-wheel with Feathering Floats.

By means of the feathering floats, all the advantages of a large wheel are obtained without the disadvantages.

The floats of a feathering wheel, instead of being bolted to the arms, are pivoted on them; that is, they are free to move on an axis parallel to the axis of the wheel; they are retained in position by means of levers attached to them, which are operated on by an eccentric-pin or sheave by means of rods. This eccentric is so set with respect to the centre of the wheel, as to cause the float to be nearly vertical when entering and leaving the water. Fig. 98 shows an ordinary feathering wheel, from which it is seen that the floats are hung by gudgeons secured in the cross bars on their back, which fit in eyes in brackets forged with the paddle arms; one of the cross bars has a tail forged with it, which acts as the lever to turn the float. The eccentric-pin has a boss or strap running loose on it, and turned round by means of a radius rod, called the *king rod* L E (fig. 99), attached to one of the float levers; the other radius rods are jointed both at the levers and boss. The eccentric-pin is secured in its proper position to the sponson beam, so that when the wheel moves round each float is brought in turn to the proper position for entry, &c.

To design a feathering wheel so that the floats shall enter edgeways when going at full speed, take P a point on the face of the float just entering the water, draw P A parallel to the water-line, and cut-off P A equal to the speed of the ship through the water; draw P B tangential to the circle through P, whose centre is the centre of the wheel; and cut-off P B equal to the speed of the wheel on that circle. Complete the parallelogram A P B R, and the diagonal P R is the resultant of P A and P B, and is consequently the direction in which the float must move in that position to enter edgeways.

Produce R P, and draw parallel to it a line at a distance equal that of the centre of the gudgeon from the face of the float, cutting the circle of centre lines of gudgeons at G.

Draw G H at right angles to P F, and make H F and H P each equal half the breadth of the float. Make G L equal to the length of the lever required.

Now draw another float whose face is perpendicular and immediately under the centre of wheel, and the end of whose lever is M.

With centres M and L, and radius equal to G C, draw arcs of two circles intersecting at E. Then E is the centre of eccentric pin, and L E the length of the radius rods.

With E as centre and L E radius, draw a circle on which the centres of the lever ends of all the other floats lie.

It is usual, however, in practice to make the wheel equivalent to a radial wheel of double the diameter, and to construct it by taking a float vertically under the centre of shaft, and G the point on which the next float pivots. With G as centre and G H radius, draw the arc of a circle, and from the point A vertically above the centre of the wheel draw A H a tangent to this arc; then the face

of the float must lie on A H, and may be drawn as before. Likewise the centre of the eccentric may be found as before.

Diameter of a Feathering Wheel is found as follows:—The amount of slip varies from 12 to 20 per cent., although when the floats are small, or the resistance great, it is as high as 25 per cent.; a well-designed wheel on a well-formed ship should not exceed 15 per cent. under ordinary circumstances.

Let v be the velocity of the ship, and S be the slip in feet per minute, and R the number of revolutions per minute at which it is intended to run the engine.

Then V the velocity of wheel at float centres $= v + S$.

V is also equal R $\times \pi \times$ diameter of wheel at centres.

Hence, $$D = \frac{v + S}{\pi R}.$$

Or if K is the speed of the ship in knots per hour, and S the percentage of slip, and R the revolutions per minute,

$$\text{Diameter of wheel at centres} = \frac{K(100 + S)}{3{\cdot}1 \times R}$$

Example.—To find the diameter of a wheel for a ship intended to steam 12 knots, with 30 revolutions of the engines and 20 per cent. slip.

$$\text{Diameter} = \frac{12(100 + 20)}{3{\cdot}1 \times 30} = 15{\cdot}5 \text{ feet nearly.}$$

The diameter, however, must be such as will suit the structure of the ship, so that a modification may be necessary on this account, and the revolutions altered to suit it.

The diameter will also depend on the amount of "dip" or immersion of float.

When a ship is working always in smooth water the immersion of the top edge should not exceed $\frac{1}{8}$ the breadth of the float; and for general service at sea an immersion of $\frac{1}{2}$ the breadth of the float is sufficient. If the ship is intended to carry cargo, the immersion when light need not be more than 2 or 3 inches, and should not be more than the breadth of float when at the deepest draught; indeed, the efficiency of the wheel falls off rapidly with the immersion of the wheel, and for this reason the radial wheel was so long retained for sea-going cargo boats, as it permitted of the floats being reefed—that is, brought nearer to the centre.

Area of One Float of a Feathering Paddle.—Let D be the diameter of the wheel to the float centres in feet.

Then area of one float in sq. ft. $= \frac{\text{I.H.P.}}{D} \times C.$

C is a multiplier, varying from 0·3 to 0·35.

The number of floats $= \frac{D + 2}{2}$.

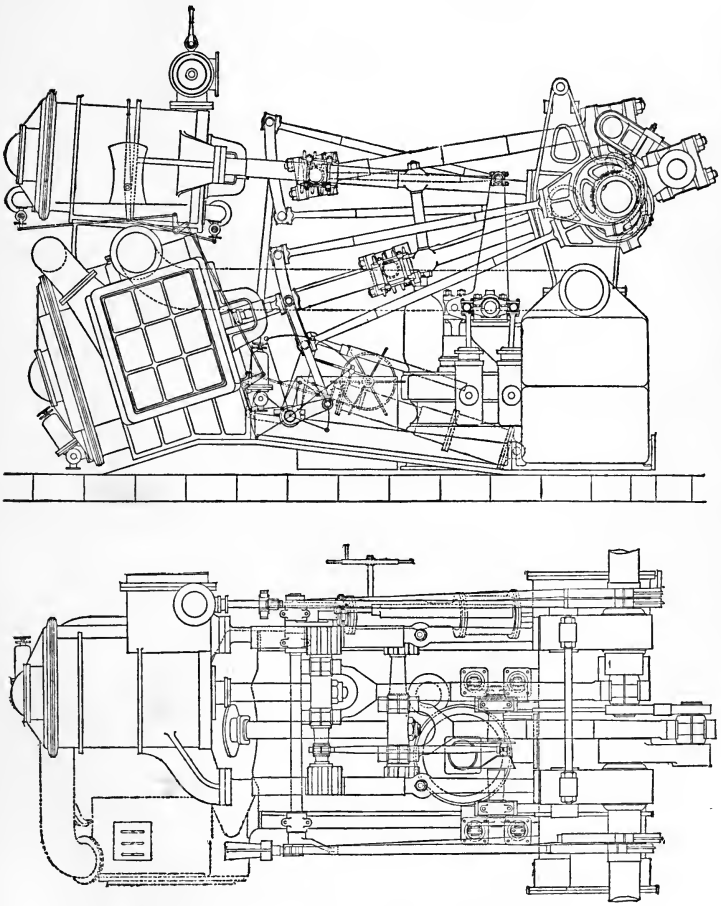

Fig. 100.—Diagonal Compound Paddle Engines.

The breadth of the float = 0·35 × the length.
The thickness of floats = $\frac{1}{12}$ the breadth.
Diameter of gudgeons = thickness of float.

Paddle-wheel Frames, &c.—The strain on the wheel due to the resistance of a float is taken immediately by the pair of arms to which the float is attached, and by means of the rims is partially transmitted to the other arms. For ships working only in smooth water a much lighter wheel is sufficient than would do for those liable to the shocks of heavy seas. In any case the strength of the wheel must be sufficient to transmit the power of the engine to the water in the float-race, and as the twisting power exerted on the crank is approximately proportional to the cube of the diameter of the shaft journal, the strength of the wheel-frame must be in the same proportion. The strength of the arms of the wheel will vary directly as their thickness and as the square of their breadth. Hence, if D is the diameter of the *inner* or engine journal of the paddle-shaft, t the thickness of an arm whose breadth is b, and n the number of arms on one wheel.

$$n \times t \times b^2 \text{ varies as } D^3,$$

and

$$n \times t \times b^2 = K \times D^3,$$

or

$$t \times b^2 = \frac{K}{n} \times D^3.$$

When the shaft is of iron K = 0·7 for a section near the boss, and 0·45 for a section near the inner rim when there are two rims. When the wheel has only one rim, so that the floats are attached to the projecting ends of the arms, the arms must be much stronger, as the whole strain may come on the pair of arms, and cause a severe bending strain close to the inner rim.

The section at the arm outside the rim may be found in a similar way, on the assumption that the distance of float centre from the rim bears a constant ratio to the diameter of the wheel (about $\frac{1}{10}$); then, if t be the thickness and b the breadth as before,

$$t \times b^2 = K \times D^3.$$

If the shaft be of iron, K = 0·1.

Usually $\frac{b}{t} = 5$ for arms near the boss, and 3·5 to 4 for arms near the rim. When there are two rims, the arms are of uniform breadth and thickness between the rims.

When there is only one rim, $\frac{b}{t} = 6$ at the parts of the arm just at the outer edge of the rim.

The section of the inner rim is 0·8 that of the arms near to it, and $\frac{b}{t} = 5$.

The section of the outer rim is equal to that of the arm near it, and $\frac{b}{t} = 4$.

When there is only one rim its section is equal to that of the arm near the boss, and $\frac{b}{t} = 4$.

The inner rim of the wheel is stayed to the boss by round ties, whose diameter is about twice the thickness of the rim. They are bolted to the rim between the arms, and to the side of the boss opposite, so as to be diagonal with a pair of arms. This gives good support to the whole framework, and prevents racking and side-play.

Example.—To find the scantlings of a feathering wheel having inner and outer rims, the diameter of paddle-shaft journal at the engine being 10 inches, and the number of floats 8 to each wheel. The number of arms therefore is 16.

(1.) Section of arms near boss, $\left(\frac{b}{t} = 5\right)$.

$$t \times b^2 = \frac{0{\cdot}7 \times 10^3}{16} = \frac{700}{16}.$$

Since $b = 5\,t$,

$$25\,t^3 = \frac{700}{16},$$

$$t = \sqrt[3]{1{\cdot}75} = 1{\cdot}2 \text{ inches},$$

and

$$b = 5 \times 1{\cdot}2, \text{ or } 6 \text{ inches}.$$

(2.) Section of arms near rims, $\frac{b}{t} = 4$.

$$t \times b^2 = \frac{0{\cdot}45 \times 10^3}{16} = \frac{450}{16}.$$

Since $b = 4\,t$,

$$16\,t^3 = \frac{450}{16},$$

$$t = \sqrt[3]{1{\cdot}75}, \text{ or } 1{\cdot}2 \text{ inches},$$

and

$$b = 4 \times 1{\cdot}2, \text{ or } 4{\cdot}8 \text{ inches}.$$

(3.) The section of inner rim = 0·8 (1·2 × 4), or 3·84 square inches, and since $\frac{b}{t} = 4$, the area = $4\,t^2$.

Hence,

$$t^2 = \frac{3{\cdot}84}{4}; \qquad \text{or } t = 0{\cdot}98 \text{ inch,}$$

and $b = 4 \times 0{\cdot}98$, or 3·92 inches.

The outer rim has the same sectional area as the arms. The iron of arms would be then 6″ by $1\frac{3}{16}$″ at boss, and $4\frac{3}{4}$″ by $1\frac{3}{16}$″ at rims. The outer rim $4\frac{3}{4}$″ by $1\frac{3}{16}$″, and the inner rim 4″ by 1″, stayed diagonally by bars 2″ diameter.

For the wheels of steamers running only in smooth or nearly smooth water, the values of K may be reduced by 15 per cent. in each case, and if it is necessary to make the wheel as light as possible, the strength of the various parts should be calculated by finding the value of R, the resistance at the floats, and assume that the whole power of the engine may be applied to one wheel.

Let T be the maximum twisting moment in inch pounds, as found by the rules in Chapter IX., D the diameter of the wheel to float centres in inches. Then

$$R = T \div \frac{D}{2}.$$

$R \times \frac{D}{2}$ is the bending moment at the centre of the wheel; and $R \times \frac{D}{4}$ that half way between the centre and float-centres.

The bending moment at the middle of the arms is therefore

$$\frac{2\,T}{D} \times \frac{D}{4} = \frac{T}{2}.$$

And if n be number of arms, or twice the number of floats,

$$\text{Bending moment on one arm} = \frac{T}{2\,n}.$$

Then

$$t \times b^2 = \frac{T}{F \times n} \times 3$$

F may be taken at 9000 for ordinary, and 10,000 for really good iron.

The gudgeons on which the floats of a feathering wheel are hinged are not, of necessity, placed at their centre line horizontally, and it is a very general custom so to fix them that the larger part is above the axis, so that when the float is entering the water and leaving it, there is not so much strain on the radius rods. As a

rule, the line of gudgeons should be $\frac{3}{5}$ of the breadth of the float from the edge nearest the centre of the wheel.

The gudgeons and pins of the feathering gear are of iron, cased with brass, and the holes in which they work should be bushed with lignum vitæ. If the ship usually works in sandy water, the pins may be of iron, and the holes bushed with white metal, which withstands the cutting action of the sand particles better than do the brass and wood.

The eccentric pin on the sponson beam should also be cased with brass, and the boss to which the feathering rods are attached should be bushed with lignum vitæ, as water is the only lubricant applied to them.

The outer bearing of the paddle-shaft should be twice the diameter of the shaft in length, very strongly made, and firmly secured to the bracket on the ship's side, as the whole of the thrust, besides the weight of the wheel, is taken on it. The force acting on it is the resultant of the thrust and weight, whose direction is diagonal, and its magnitude easily calculated. The bearing must be so formed as to take the strain, and to admit of adjustment in that direction. It is always downward, so that the caps of the bearing need not be very strong. The lubricant is to a great extent water, but an arrangement should be made for oiling, and a cavity left in the cap for a piece of tallow, or a mixture of tallow and soft soap. The shaft should have fitted to it a stuffing-box and gland, where it passes through the skin of the ship.

Screw Propellers.—The simple screw, as first fitted, consisted of a part of a true helix, cut off by two parallel planes perpendicular to the axis, and it had therefore only one blade, strictly speaking. By cutting a double helix, or a double-threaded screw in this way, two blades are obtained; and in this form, with very slight modifications, the screw propeller was used for many years. It was found, however, that by cutting away the corners, especially those on the forward or leading edges, the vibration was very much reduced, and in course of time the paring process left the screw blade very much as it is generally found now.

The number of blades was, however, increased from two to as many as six, and as there was no scientific or even practical test made of the relative advantages of six or two blades it remained for a happy accident to the six-bladed propeller of a canal boat to demonstrate that six blades were too many; since then, ample proof has been given that two blades are not sufficient in a rough sea, and that if one of three blades be broken off, the propeller is so badly balanced as to severely strain the engines, so that four blades has become the rule for the propellers of sea-going ships of the mercantile marine.

For smooth water the two-bladed propeller is the most efficient, but its efficiency is rapidly impaired so soon as the ship begins to pitch. The efficiency of a screw-propeller depends on so many things, some of which are external, that no rules can be laid down

which will command the respect of practical engineers. A screw which will work with most satisfactory results on one ship, will be most inefficient on another, although driven by similar engines, and at the same number of revolutions; the reason for such differences is not far to seek when properly looked for.

Although very much has been written on the subject, and many men of undoubted ability have spent time and money in making researches, still the best informed are liable to make the most egregious mistakes in designing a screw, as evidenced on the first trials of H.M.S. "Iris."

That opinions differ very widely on the subject may be seen by referring to the Patent Records, as well as to the Transactions of the various Scientific Institutes.

Professor Rankine (Appendix to *Steam Engine*) states,—"The efficiency of the propeller is $\frac{V}{V+S}$, V being the velocity of the ship in feet per second, and S the *slip* of the propeller in feet." In other words, the less the slip, the higher the efficiency; this, however, is only true theoretically, on the supposition of there being no friction. The late Dr. Froude, than whom no one has given more patient attention to this most important subject, says that, . . . "instead of its being correct to regard a large amount of slip as a proof of waste of power, the opposite conclusion is the true one. To assert that a screw works with unusually little slip, is to give a proof that it is working with a large waste of power,"* which is the exact contrary of the results arrived at from Rankine's investigation, but is in accordance with everyday observation on the performances of ships. It must not, however, be supposed that a screw having a large amount of slip is necessarily an efficient one.

A screw works in water disturbed more or less by the passage of the ship, and is liable to be very seriously interfered with by the "wake" or water following the ship, and therefore cannot be dealt with as if working in still water.

Let P be the pitch of the screw, R the number of revolutions per second; then,

$$\text{Velocity of stream from it } V = P \times R.$$

Let v be the velocity of the ship in feet per second, A the area of section of stream from the screw, which is approximately the area of a circle of the same diameter, less the area of transverse section of the boss.

$$\text{Then, } V - v \text{ is the slip.}$$

As before explained, $A \times V$ is the volume of water projected *from the ship* in cubic feet per second, and taking the weight of a cubic foot of *sea*-water at 64 lbs., and the force of gravity at 32,

* *Transactions of the Institution of Naval Architects*, Vol. xix., 1878.

$$\text{Momentum of stream} = \frac{A \times V \times 64}{32} (V - v)$$

$$= 2 A \times V (V - v).$$

This is the thrust of the screw on the ship exerted along the shaft in pounds.

Professor Rankine gives (*Rules and Tables*, p. 275) this same rule in another and more convenient form for practical use, viz.:—

RULE V.—*To calculate the thrust of a propelling instrument (jet, paddle, or screw) in pounds: multiply together the transverse sectional area, in square feet, of the stream driven astern by the propeller; the speed of the stream relatively to the ship in knots; the real slip, or part of that speed which is impressed on that stream by the propeller, also in knots; and the constant* 5·66 *for sea-water, or* 5·5 *for fresh water.* That is, if S is the speed of the screw in knots, s the speed of the ship in knots, A the area of the stream in square feet (of sea water),

$$\text{Thrust in pounds} = A \times S (S - s) \times 5{\cdot}66.$$

Example.—To find the thrust from the screw, whose slip is 10 per cent., and the speed of the ship 12 knots; the diameter of screw is 14 feet; and that of the boss 3 feet.

$$A = \frac{\pi}{4} (14^2 - 3^2), \text{ or } 147 \text{ square feet.}$$

$$\text{Speed of screw} \times (1 - \tfrac{10}{100}) = 12 \text{ knots; or,}$$

$$\text{Speed of screw} = \tfrac{10}{9} \times 12, \text{ or } 13{\cdot}33 \text{ knots.}$$

$$\text{Then thrust} = 147 \times 13{\cdot}33 (13{\cdot}33 - 12) \times 5{\cdot}66 = 14750 \text{ pounds.}$$

Apparent Slip.—The difference between the speed of the ship past the water which is removed from the hull some few yards, and the speed of the screw calculated by multiplying the pitch by revolutions, is called the *apparent slip*, as it is not always the measure of the *real slip*, which is the velocity imparted to the water by the screw in a direction opposite to that of the ship. No propeller can propel a ship without *real slip*, whilst it is a common occurrence to find that the screw has no apparent slip, and sometimes has even negative slip, so that the ship seems to be going faster than the screw.

Negative Slip.—When the phenomenon of negative apparent slip was first observed, it was thought by some to be due to false measurement of the effective pitch, and this theory was to some extent strengthened by the fact that it often occurred with screws having a variable pitch. More thoughtful observers traced it to its real cause.

It was observed that every ship dragged, so to speak, a casing of water with it, and that there was with some ships a following stream just at the stern, which seemed to be always running into

the space left by the ship, so that the velocity of the ship with respect to that casing and following stream is less than the real velocity past the still water—in other words, the velocity of the ship through the water immediately surrounding it is less than the real velocity v. The screw works in this disturbed water; consequently, to calculate its *real slip*, the forward velocity of the following stream must be known.

There is, however, much yet to be learnt before the exact causes of negative slip are fully understood, for, although some ships from their form are more prone than others to cause negative slip, yet a propeller can be fitted which will produce positive slip, and that without loss of propelling effect, but on the contrary with gain. As an example of this, the case of H.M.S. "Amazon" may be cited. With her original screw, which was a 4-bladed Mangin 15′ 0″ diameter and 12′ 6″ pitch, a speed of 12·079 knots only was obtained with 1940 I.H.P., the slip being 14 per cent. negative; while with a two-bladed Griffith's screw 15′ 0¾″ diameter and 13′ 9″ pitch, a speed of 12·396 knots was obtained with only 1664 I.H.P., the slip being then 3·16 per cent. positive.

If a propeller gives negative slip, or only no slip, it should be changed at the first opportunity, as all experience has shown that it is not working efficiently when such is the case.

Diameter of Screw.—The size of a screw depends on so many things, that it is very difficult to lay down any rule for guidance, and much must always be left to the experience of the designer so to allow for all the circumstances of each particular case as to give the proper proportions.

If a screw blade breaks through the surface of the water, it will carry down with it a certain amount of air, which very much decreases the efficiency, and causes a sudden acceleration of the speed of the screw, the mixture of air and water being of lower density than that of water alone. This acceleration is called *racing*, and may always be observed when the propeller is not wholly immersed, or when the ship pitches even very slightly. For this reason a small propeller wholly immersed is better and more efficient than a larger one whose top edge is above or even quite close to the water surface. Hence, the diameter of the propeller should be always less than the draught of water of the ship. The diameter of the screw must also bear some relation to the turning power of the engine, for if made of too small diameter it cannot absorb the power of the engine, however coarse the pitch may be.

It has been shown by the late Dr. Froude, in the paper already alluded to, that if a blade moved through the water without surface friction and 'head' resistance, the larger the diameter, the better; also, that if the efficiency of the mechanism was the same at any number of revolutions, a fine pitch propeller might be used with advantage, as being more efficient than a coarse pitch one. But since the efficiency of the engine is much higher

at moderate than at the maximum rates of speed, the total efficiency of the screw and engine is often improved by increasing the pitch of the screw. Further, since the surface or skin friction per square foot of surface increases as the square of the distance from the centre, and the distance at which it acts also increases with the distance from the centre, the frictional resistance per square foot varies as the cube of the distance from the centre, so that any increase of diameter means large increase in resistance. For these reasons small screws with coarse pitch often give far better results than large ones of fine pitch on the same ships; this was proved on the trials of H.M.S. "Iris," as well as on many other occasions.

The magnitude of the skin resistance of a propeller is well illustrated by Dr. Froude, who says—

"Take the case of a screw 20 feet diameter, making 80 revolutions per minute; the tips of the blades are travelling at a speed of about 50 knots; now, the resistance of a surface so short in the line of motion as a screw blade, *even when its surface is quite smooth*, is as much as $1\frac{1}{4}$ pounds per foot at 10 knots, and is nearly as the square of the speed, and as each square foot of blade area involves two square feet of skin, the resistance of each is over 60 pounds; thus, making some allowance for thickness and bluntness, there is involved in driving it at 50 knots at least 10 I.H.P., and collectively the outmost foot of four such blades, each 3 feet wide, would absorb fully 120 I.H.P. in surface friction; and though the parts nearer to the root move with proportionally less speed, and therefore with less resistance, yet, on the other hand, screw blades are generally rough from the sand, and have probably a still higher coefficient of frictional resistance."

If a screw is of sufficient diameter, and has ample blade area, any addition beyond the tip will act then quite as a brake, and seriously reduce its efficiency.

Thrust of a Screw Propeller.—The thrust of a propeller has been shown to vary directly as the area of the disc, that is, it varies as the square of the diameter; it has been also shown that the thrust varies as the square of the velocity of flow, that is, as the square of the product of the revolutions and pitch. But the speed of the ship varies as the product of the revolutions and pitch, and the indicated horse-power should vary as the product of thrust and speed.

Let D be the diameter, and P the pitch of the screw in feet, R the number of revolutions, and I.H.P. the indicated horse-power; then

Thrust varies as $D^2 \times (R \times P)^2$.

I.H.P. varies as thrust $\times (R \times P)$, or varies as $D^2 \times (R \times P)^3$.

Then, I.H.P. $= K \times D^2 \times (R \times P)^3$.

Diameter and Pitch of a Screw Propeller.—The value of K being substituted, the following formulæ are obtained:—

$$\text{Diameter of screw} = 20{,}000 \sqrt{\frac{\text{I.H.P.}}{(\text{P} \times \text{R})^3}},$$

or,

$$\text{Pitch of screw} = \frac{737}{\text{R}} \sqrt[3]{\frac{\text{I.H.P.}}{\text{D}^2}}.$$

The diameter and pitch of the screw suitable for an engine can be found from the following formulæ with a very fair degree of accuracy, when worked under the conditions which usually obtain in the mercantile marine.

$$\text{Diameter of screw} = \sqrt{\frac{\text{N.H.P}}{\text{pitch}} \times 20};$$

or,

$$\text{Pitch of screw} = \frac{\text{N.H.P.}}{\text{D}^2} \times 20.$$

Example.—To find the diameter of a screw for an engine which is to develop 1200 horse-power when working at 70 revolutions, and to have a pitch of 20 feet.

$$\text{Diameter of screw} = 20{,}000 \sqrt{\frac{1200}{(20 \times 70)^3}}$$

$$= \frac{20{,}000}{1512}, \text{ or } 13{\cdot}23 \text{ feet.}$$

Example.—To find the diameter of a screw suitable for an engine of 250 N.H.P., for the mercantile marine, and having a pitch of 20 feet.

$$\text{Diameter} = \sqrt{\frac{250}{20} \times 20}, \text{ or } 15{\cdot}8 \text{ feet.}$$

For screws of torpedo boats, and fast steam launches, substitute 25,000 for 20,000.

Example.—To find the diameter of the screw for a steam launch whose engines develop 200 I.H.P., when working at 300 revolutions, the pitch to be 6 feet.

$$\text{Diameter of screw} = 25{,}000 \sqrt{\frac{200}{(6 \times 300)^3}}$$

$$= \frac{25{,}000}{5400}, \text{ or } 4{\cdot}6 \text{ feet.}$$

Merchant ships whose speed is from 8 to 10 knots per hour are usually fitted with propellers of larger diameter than given by these rules, as it is preferred to run the engines at a comparatively slow speed, so as to reduce the wear and tear, the efficiency of the engine compensating in great measure for the low efficiency of the screw; in fact, many engines, if worked at a higher speed, would so

lose in efficiency, that a very considerable increase in efficiency of the propeller would not bring the total efficiency to that before existing. This is particularly true of cargo boats as now built, whose very full water-lines do not admit of screws of small diameter working with even fair efficiency.

The blades of the large screws as usually fitted, reach out into the comparatively undisturbed water, while the small screws have a strong tendency to race, from the occasional failure of the water to flow in behind the buttock lines.

A screw steamer may have a full "entrance," and steam very fairly well if the "run is clean," while, on the other hand, a fine entrance will not compensate for a full "run."

For such cargo steamships, the following rule holds good:

$$\text{Diameter of screw} = 17{,}000 \sqrt{\frac{\text{I.H.P.}}{(\text{P} \times \text{R})^3}}$$

and

$$\text{Pitch of screw} = \frac{660}{\text{R}} \sqrt[3]{\frac{\text{I.H.P.}}{\text{D}^2}}$$

Rules are often given for the diameter of a propeller without regard to the size or power of the engines, being generally based on the relation between the area of the screw's disc and that of the immersed midship section. It is also a very common practice "to fit as large a propeller as the draught of water will permit;" but this means, in most cases, a propeller working inefficiently on account of the blades emerging from the water and carrying air down with them. If engineers generally would separate the efficiency of the screw from that of the machinery, such large screws would often be discarded.

Indicated Thrust.—The efficiency of the screw may be examined on the system proposed by the late Dr. Froude—viz., by constructing curves of *indicated thrust* on the same principle as that described in Chap. III., for curves of I.H.P.

In this case, however, the ordinates represent the thrust as calculated from the I.H.P., or from the pressure on the pistons, and this for convenience is generally expressed in tons.

It is assumed that the pressure on the pistons multiplied by twice their stroke is equal to the thrust multiplied by the pitch, and if there were no loss by friction of machinery, &c., by the principle of work this would be true.

Let p be the mean effective pressure on the pistons in pounds per square inch, n their number, A their area in square inches, L the length of stroke in feet, and P the pitch of the screw in feet; then,

$$\text{Thrust} \times \text{P} = p \times \text{A} \times n \times 2\,\text{L},$$

$$\text{or} \quad \text{Thrust} = \frac{p \times \text{A} \times n \times 2\,\text{L}}{\text{P}}.$$

If both numerator and denominator of the fraction be multiplied by R, the number of revolutions per minute,

$$\text{Thrust} = \frac{p \times A \times n \times 2L \times R}{P \times R};$$

$$\text{But } \frac{p \times A \times n \times 2L \times R}{33{,}000} = \text{I.H.P.},$$

$$\text{Therefore, Thrust} = \frac{\text{I.H.P.} \times 33{,}000}{P \times R}.$$

This is called the *indicated thrust,* and it was by constructing a curve of *indicated thrust* that the inefficiency of the original screws of H.M.S. "Iris" was discovered.

Dr. Froude* also explained the method by which he estimated the "*initial friction,*" or "the equivalent of friction of the engines due to the working load." He said,—"When decomposed into its constituent parts indicated thrust is resolved into several elements, which must be enumerated and kept in view. These elements are —1. the useful thrust, or ship's true resistance; 2. the augment of resistance, which is due to the diminution which the action of the propeller creates in the pressure of the water against the stern end of the ship; 3. the equivalent of the friction of the screw blades in their edgeway motion through the water; 4. the equivalent of the friction due to the dead weight of the working parts, piston packings, and the like, which constitute the initial or slow-speed friction of the engine; 5. the equivalent of friction of the engines due to the working load; 6. the equivalent of air-pump and feed-pump duty.

"It is probable that 2, 3, and 4 of the above list are all very nearly proportional to the useful thrust; 6 is probably nearly proportional to the square of the number of revolutions, and thus, at least at the lower speeds, approximately to the useful thrust; 5 probably remains constant at all speeds, and for convenience it may be regarded as constant, though perhaps in strict truth it should be termed 'initial friction.' If, then, we could separate the quasi-constant friction from the indicated thrust throughout, the remainder would be approximately proportional to the ship's true resistance.

"Now, on drawing a curve (of indicated thrust) . . . it becomes at once manifest in every case, that at its low-speed end the curve refuses to descend to the thrust zero, but tends towards a point representing a considerable amount of thrust, and it is impossible to doubt that this apparent thrust at the zero of speed, when there can be no real thrust, is the equivalent of what I have termed initial friction; so that if we could determine correctly the point at which the curve, if prolonged to the speed zero, would

* *Transactions of the Institution of Naval Architects,* Vol. XVII., 1876.

intersect the axis O Y (fig. 101), and if we were to draw a line through the intersection parallel to the base, the height which would be thus cut off from the thrust ordinates would represent the deduction to be made from them in respect of constant or initial friction, and the remainders of the ordinates between this new base and the curve would be approximately proportional to the ship's true resistance."

Dr. Froude then explained his method, which is substantially as follows:—

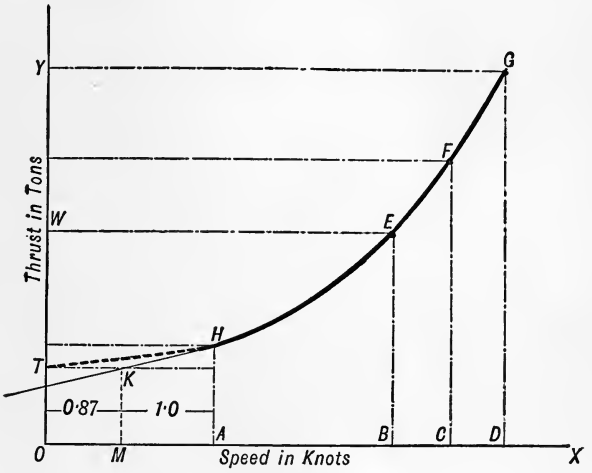

Fig. 101.—Curve of Indicated Thrust.

Let O B, O C, O D represent the three progressive speeds, observed in the usual way, and B E, C F, D G the indicated thrust, calculated from the data observed at those speeds; through the points G, F, E draw the curve of indicated thrust. Let O A represent a low speed, which should not exceed 5 knots, and A H the corresponding indicated thrust; continue the curve to H, and at H draw a tangent to the curve, cutting O Y. Take a point M between O A, so that $\frac{O\,M}{M\,A} = \frac{0{\cdot}87}{1{\cdot}0}$. Draw M K parallel to A H, and cutting the tangent line at K. Through K draw a line K T parallel to O D, cutting O Y at T. Then O T is the part cut off O Y by the curve, and represents the initial friction.

Dr. Froude deduced, from careful investigation, that only 37 to 40 per cent. of the whole power delivered is usefully employed, and that "the constant friction is equivalent to from one-eighth to one-sixth of the gross load on the engine when working at its maximum speed and power."

Also, taking the power due to the ship's net resistance as E.H.P., and the six elements already enumerated when multiplied by

$$\frac{\text{speed of ship in feet per minute}}{33{,}000} \text{ as S.H.P.}$$

Then

$$\text{S.H.P} = 2{\cdot}347 \text{ E.H.P.}$$

Pitch of Screw.—Let S be the speed of the ship in knots per hour, R the number of revolutions per minute, and s the slip in knots; then,

$$\text{Pitch} = \frac{(\text{S} + s) \times 6080}{60 \times \text{R}}.$$

If the slip is expressed as so much per cent. of *the speed of screw*, which is the common way, and is x per cent.

Then

$$\text{S} = \text{speed of screw}\left(1 - \frac{x}{100}\right);$$

or

$$\text{Speed of screw} = \text{S} \div \left(1 - \frac{x}{100}\right) = \text{S} \times \frac{100}{100 - x}$$

Then,

$$\text{Pitch} = \frac{\text{S} \times 100 \times 6080}{60 \text{ R } (100 - x)} = \frac{\text{S}}{\text{R}} \times \frac{10133}{100 - x}.$$

Example.—To find the pitch of the screw for a ship whose speed is 15 knots per hour, the slip is 10 per cent., and the number of revolutions 60 per minute.

$$\text{Pitch} = \frac{15}{60} \times \frac{10133}{100 - 10}, \quad \text{or } 28{\cdot}14 \text{ feet.}$$

The slip of a well-proportioned screw on a ship of fairly good form should not exceed 8 per cent. when at *sea* full speed, and 10 per cent. when on *trial* full speed. If the slip is less than 5 per cent. at full speed, the screw is not of such proportions as to suit the particular ship. The large propellers of bluff cargo boats already alluded to, however, seldom exceed 5 per cent., and to them the remark does not apply. An excessive amount of slip does not of necessity imply waste of power, as it may arise from smallness of diameter; and also when a screw of larger diameter gives a better speed than that obtained by the original small one, it is often due to the increased efficiency of machinery at a reduced number of revolutions.

An abnormally large amount of slip may, however, be due to want of area of screw blade, and when this is the case the curve of indicated thrust exposes it, as it will then exhibit want of augmentation of thrust at the higher speeds.

Area of Screw Blade.—The best area of surface of screw blade is not easily determined, except by actual experiment, or from data derived from the performances of similar ships with similar screws. The general indication of too little surface is an abnormal amount of slip at the higher speeds with a low indicated thrust; a too large amount of surface generally causes the screw to show apparent negative slip, especially at the lower speeds; negative slip occurs more especially when there is extra surface of blade near the tips. In H.M. Navy negative slip was usually observed with four-bladed propellers, and especially with those of the "Mangin" type.

The area of blades given by the following rule is such as is generally found to give good results, and may be used by those who have no good experience to guide them:—

$$\text{* Total area of screw blades} = K \sqrt{\frac{\text{I.H.P.}}{\text{revolutions}}}.$$

The value of K, for four-bladed, is 15 for single, 10·5 for twin screws.
" " three- " 13 " 9·0 " "
" " two- " 10 "

The projected area, or the area of the blade as drawn on an end elevation, such as would be seen on looking toward the stern of the ship, is often taken as the criterion of actual blade surface; and is to some extent a true one, since a coarse pitch blade requires more surface than a fine pitch one for the same power developed by the engine, and the *projected* area of the fine pitch blade will not differ much from that of the coarse pitch one.

Thickness of Blade.—The strength of a blade at the root, or part near the boss, will vary nearly directly as the breadth and as the square of the thickness, and for practical purposes may be assumed to do so. The strain on the propeller will vary as the cube of the diameter of the tunnel shafts, and very nearly as the cube of the diameter of the propeller shaft. In similar engines, the twisting power of the engines has been shown to vary as I.H.P. ÷ revolutions.

Let d be the diameter of the screw shaft close to the propeller, b the breadth of blade in inches at a distance of $1\frac{1}{2} \times d$ from the centre, and n the number of blades; R the number of revolutions per minute,

$$\text{Then thickness of blade (at } 1\tfrac{1}{2} \times d \text{ from centre)} = \sqrt{\frac{d^3}{n \times b}} \times K,$$

Also,

$$\text{Thickness of blade " " } = \sqrt{\frac{\text{I.H.P.} \times f}{R \times n \times b}} \times K,$$

f may be taken as 100 for compound engines of the ordinary two- and four-cylinder type; 90 for three- and six-cylinder compound

* Torpedo boats and other ships with high speed engines and built with fine lines may have 30 to 40 per cent. less area of screw blades.

engines; and 85 for three-crank triple compound engines. The value of K is 4 for cast iron, 2 for ordinary gun-metal, 1·6 for cast steel, and 1·5 for forged steel and bronzes of superior make.

The thickness of metal at the tip should be 0·2 of that at the root.

Propellers made of steel and bronze are very superior in strength to those of cast-iron, even if made in accordance with these rules; for if made of the *same* strength only, the blades would not be *stiff* enough, and would vibrate very considerably, especially when racing.

Propeller Boss.—When for a loose-bladed propeller, this is usually spherical in general form, with flats or recesses for the blades. The diameter of the sphere is from $\frac{1}{4}$ the diameter of the screw for small propellers, to $\frac{1}{5}$ the diameter for large ones. The length of the boss depends on the size of the base of the blades, and is generally about 0·85 the diameter of sphere for a two-bladed screw, and 0·75 when four-bladed.

The bosses of some very large screws have been made oval in fore and aft section, and the base of the blades made oval to fit them. This form is not so good for many reasons as the spherical, and was adopted more on account of the boss being a forging than from any other cause.

In H.M. Navy, as well as in the navies of most countries, gun-metal is the material employed for both boss and blades. The Admiralty specify that it must be composed of 87·65 best selected copper, 8·32 tin, and 4·03 best Silesian spelter. This mixture, when carefully made, should have an ultimate tensile strength of 16 tons per square inch, and be very tough. Unless very carefully melted, however, test pieces from large castings seldom exceed 14 tons.

The Admiralty have tried phosphor-bronze and manganese-bronze for propellers, but seem to prefer ordinary bronze as more suitable to the service, and less liable to deterioration, &c. Bronze is a necessity with some naval ships, on account of the copper on the bottoms and the brass elsewhere in the submerged parts affecting cast iron or steel; it is also used because its strength is superior to that of cast iron, and because steel is viewed with some considerable amount of distrust by the authorities, which has not been lessened by the action of some of the larger steamship companies, who are now adopting bronzes in lieu of steel.

In the mercantile marine, the boss is generally of cast iron, of as strong a mixture as can be made. In large steamers and all ships which make long voyages to distant parts the bosses should be of cast steel. Solid forged iron and steel have been tried for very large propellers, this, however, but seldom, as steel castings can now be made of excellent qualities, and at moderate cost.

The studs for securing the blades to the boss are of bronze for bronze blades, and sometimes for iron and steel blades, but

for the latter best iron or steel is preferable, the nuts being, however, of brass with closed ends to protect the studs.

The bosses of solid cast propellers are oval in fore and aft section as a rule, and are from $\frac{1}{6}$ to $\frac{1}{8}$ the diameter of the screw in diameter, and about $2\frac{1}{2}$ to $2\frac{3}{4}$ times the diameter of the shaft in length.

Screw Propeller Blades.—The screws of ships of the mercantile marine are generally of cast iron, and up to moderate sizes are almost invariably cast solid, although latterly there is a decided tendency to adopt those with loose blades. A solid screw is more efficient than one whose blades are bolted on, and is only about half the cost of the latter. The cause of inefficiency arises from the resistance of the projecting nuts, and often this is added to by the clumsy flanges of the blades, which project beyond the boss itself. A well-designed and carefully made screw should have the base of the blade conforming to the general outline of the boss, and the nuts or bolt heads recessed into the blade base, and covered in with a metal case or cement flush with the surface (fig. 102). The screws in H.M. Navy are generally made in this way, and are then quite as efficient as a solid screw.

If one of the blades of a solid screw is broken off, the whole screw is practically ruined,* and the expense of a new one thereby entailed; also, what is of more serious consequence, the ship must go into a dry dock, or on a slip or "hard" to have it removed, which operation is long and tedious, as the boss must be forced off, the tunnel-shaft taken down, and the screw-shaft withdrawn before the new one can be fitted. On the other hand, if the screw has its blades bolted on, and one is damaged, it can be removed by a diver, and a new one fitted in its place at a very small expense, and in a very short time; and even when an experienced diver cannot be obtained, the ship can be tipped by discharging cargo from aft, &c.

The forms of propeller blades are so numerous and varied as to be beyond description here. The well-known blade (fig. 103) introduced by Mr. Griffiths, and now bearing his name, was the one most generally adopted by engineers, and generally gave satisfaction. Only a few carry out the plan he usually so strongly recommended, of bending the blade slightly forward, perhaps principally because it then came too near to the stern-post. Some have tried blades bent in the reverse way, and satisfied themselves that improved performance is obtained. The data published by inventors of screws are generally very misleading, as the failures are never mentioned, and seldom is it observable that an old screw has been replaced by a patent one of the same diameter, pitch, and area. There is little doubt that the better results with the "improved screw" are due rather to better proportions than to the particular *shape* of blade. The number of patents relating solely to the *form* of blade is endless, and some special ones, introducing additions "to prevent loss from the centrifugal action," reappear periodically as novelties. This latter is a great bugbear with many engineers;

* A clever founder can burn on new ends to blades both with iron and bronze.

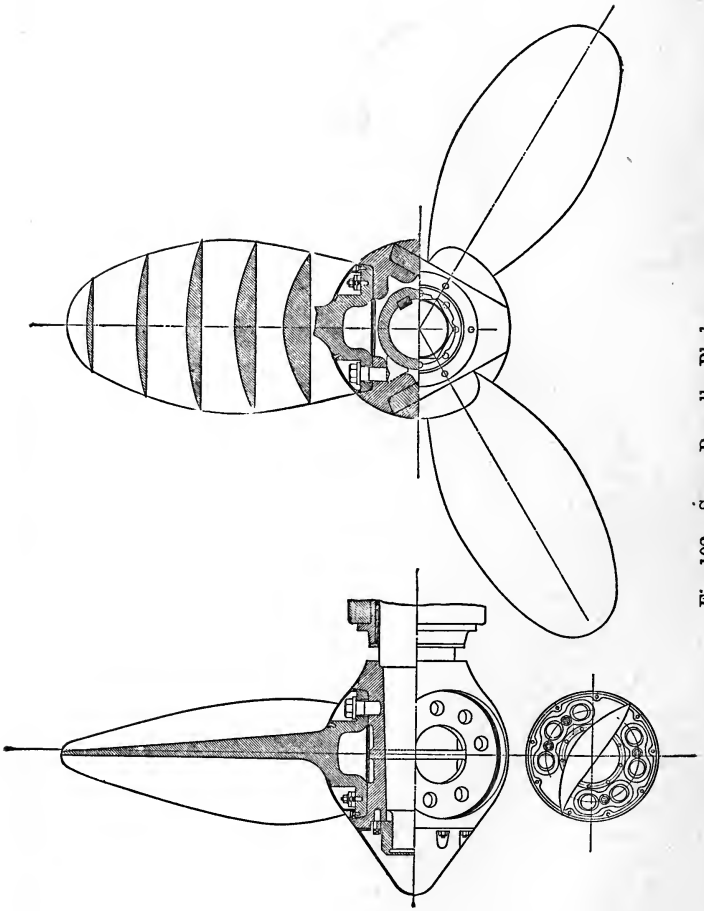

Fig. 102.—Screw Propeller Blades.

for after all, the loss from this cause is in a well-formed screw very slight, so that it always happens that means adopted to prevent it are themselves causes of a greater loss from frictional resistance.

As a rule, the greatest breadth of blade should not be beyond one-third of the diameter of the disc from the centre, and should be approximately as given by the following rule:—

$$\text{Maximum breadth of blade in inches} = K \sqrt[3]{\frac{\text{I.H.P.}}{\text{revolutions}}}.$$

For a four-bladed screw, K = 14; for three-bladed, K = 17, and for two-bladed, K = 22.

The breadth of blade at the tip should be from $\frac{1}{3}$ to $\frac{2}{5}$ the maximum.

Propellers are often made with the blades of finer pitch near the boss than at the tip, partly that the angle shall not be so coarse that this part of the blade only churns the water, and partly that the hold on the boss due to the increased breadth of blade may be greater. A decrease of pitch of 10 per cent. has given good results and when the propeller is of small diameter, with a very coarse pitch, as much as 15 per cent. decrease may be adopted; as a rule, however, a true helix gives best results.

Material for Screw Blades.—Cast iron is, of course, the cheapest material for this purpose, and also possesses another advantage not so much appreciated until experience teaches, viz.:—that when struck violently against an obstacle like a jetty or wreckage, it breaks clean off, without, as a rule, damaging the shaft; on the other hand, steel or bronze blades, which are strong enough and tough enough to resist fracture, are sometimes bent so as to prevent the screw from turning, and often cause the shaft to be seriously bent, or even broken. Cast iron when used should be of the very best description, twice cast and cooled slowly; hematite, and even steel, is often added to strengthen the mixture: the former is now generally used by moulders for this purpose.

Steel blades can now be bought at about two-and-a-half times the cost of cast-iron ones; they are very much stronger, even when the section is considerably reduced, and consequently are more reliable, especially for engines of very large power, which must work at high speeds in rough weather. The efficiency of the propeller is also much increased in consequence of the reduction in thickness.

Mr. James Howden has suggested a very strong and efficient form of steel blade; it is *forged* to the required shape, and pressed to the right pitch, &c., and secured to the boss by a cylindrical shank and cotter, in the same way that those in H.M. Navy were formerly fitted, so as to leave no projections. The chief objection to steel, especially to cast steel, is its liability to rapid corrosion on the backs of the blades. Cast iron corrodes into pits, but steel goes much more rapidly, and in some instances the tips are "honeycombed" in a few weeks.

Paint provides little or no protection, and even nickel plating, which has been resorted to by some, has not proved very efficacious. Sheathing with Muntz metal is now being tried, and so far with satisfactory results.

Phosphor-bronze and manganese-bronze are taking the place of steel in certain quarters, notwithstanding that the cost is about twelve times that of cast iron. Blades made of these materials can be cast very thin, thinner, in some cases, than if made of steel, because there is no loss of strength by corrosion; in fact, the very high speed of certain ships is attributed largely to the high efficiency of the propeller from the thinness of the blades.

Bronze propellers are objected to on the ground that injury is often done to the iron work near them by galvanic action, but proofs of this are at most doubtful, while those most competent to speak on the subject give a direct denial to the charge, and the Admiralty does not hesitate to continue the practice of fitting them.*

Feathering Screws.—Yachts and ships which are required to sail as well as steam, cannot well do the former when the screw is stopped, unless some means be adopted of feathering the blades, so that they are nearly in a fore and aft plane, or else by withdrawing the propeller altogether from the water. The late Bennett Woodcroft patented, in 1844, a plan for feathering the blades, which in a modified form was fitted by Messrs. Maudslay, Sons, and Field to several ships. The blades, of which there are two, have shanks fitting into the boss, to which short levers are secured inside the boss; these levers are connected by links to a sliding collar outside the boss, which is carried round with the shaft, but is capable of being moved "fore and aft" on it by means of a pair of bell-crank levers actuated by a screw from on deck. When it is desired to sail, the blades are moved round into the fore and aft position by sliding the collar from the boss.

Bevis' Patent Feathering Screw.—Many patents were taken out for methods of effecting a similar movement of the blades, without the objectionable feature of external bell cranks, and to Mr. Bevis is due the perfecting of this idea. In 1858, Gregory and Craymer patented a feathering screw of which "the screw propeller shaft is made hollow, and a second shaft goes through it, carrying worm threads, which act on the propeller blades, so as to feather them to the angle desirable." In 1866, H. B. Young patented a somewhat similar idea as to the hollow shaft, but says "levers may be attached to the shanks." Fig. 80 shows the Bevis plan, which needs no description, and answers its purpose admirably.

Lifting Screws.—The screws of war-ships were formerly nearly always made and fitted, so that when desired they could be raised to the level of the deck for examination and repair when necessary, and to prevent obstruction when sailing. This plan is a very costly one, and not so efficient as the feathering blade, inasmuch as the ship steers badly owing to the gap in the deadwood, but it admits of examination and repair, which is of the utmost importance in a

* Zinc protectors are often placed on the ship in proximity to bronze screws both by the Admiralty and private owners.

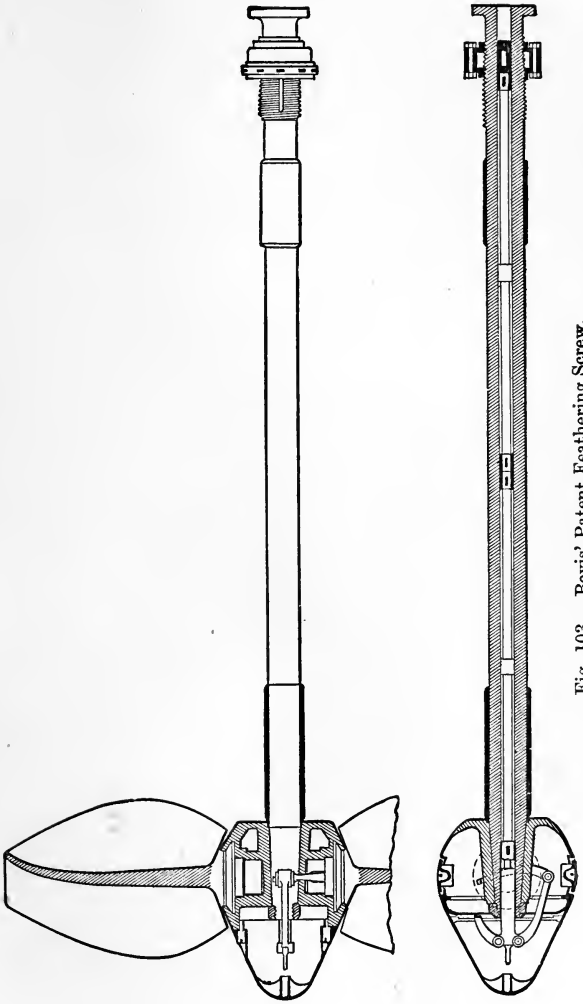

Fig. 103.—Bevis' Patent Feathering Screw.

war-ship. A hole, however, is also necessary through the stern to admit of the screw coming on deck, which very much weakens what is already a somewhat weak part of the hull.

The lifting screw has a short piece of shaft cast with the boss or fitted to it in the usual way; the forward end of this shaft is provided with a driving piece, which is so formed as to fit into a slot across the cheese coupling keyed to the outer end of the stern shaft. The propeller is carried in a frame, called the *banjo frame*, which is arranged to slide up and down in grooved metal guides secured to the stern and rudder posts, and supported, when in working position, by two strong brackets or chairs also secured to these posts, and held down by two strong wooden sampson posts, whose upper ends are fitted with jam screws to the metal guides; such an arrangement is made wholly of gun-metal.

CHAPTER XVI.

SEA-COCKS AND VALVES.

The importance of having efficient connections to the skin of the ship for inlet and outlet purposes has long been recognised, since neglect in the design or working of these fittings has often caused the loss of a ship. Next to absolute safety, simplicity should be most aimed at in all parts of the machinery of a ship; but in no place, perhaps, is there greater need of careful consideration than in the arranging and designing of the sea and bilge fittings, so that neither a careless nor an ignorant engineer can endanger the safety of the ship.

Lloyd's Committee have issued special rules on this subject, and the Board of Trade are no less vigilant in endeavouring to eliminate every source of danger.

It is needless here to give any illustration of how easily a ship may be flooded by an ill-considered arrangement of sea-cocks in ignorant hands, nor to give examples of ships that have foundered, for every engineer has heard of them. But even good arrangements may cause mischief, if, from want of simplicity, they are ill understood.

In the first place, the cocks and valves themselves should be of simple construction, and carefully marked, so as to be easily seen whether they are open or shut. The parts exposed should be either strongly made or carefully guarded, so that they are not liable to injury or derangement; and, when possible, so designed that they can be packed and examined without having to dock the ship. It is also necessary that the very large openings should

have a second valve, as a safeguard in case of accident to the first one.

Sea-cocks and valves should be so placed that they are accessible at all times; and, as far as possible, within sight from the driving platforms.

Kingston Valve.—For all large inlets the *Kingston valve* is preferable, as it acts as a non-return valve in case of the spindle breaking, and can then always be worked by simply forcing it outwards, either with the spindle itself, or by a rod substituted for it.

The Kingston valve is usually made in the form of a frustrum of a cone, with a taper of about 8 in 12; the length of the seat is generally about 1 inch $+\frac{\text{diameter}}{12}$. The object of this form of seat is to allow the valve to close itself tight in place, in case of the spindle breaking, by the pressure of the water. The Admiralty require that these valves shall be made in one with their spindles, of best gun-metal, and the spindle *tested* to a strain of half a ton for each square inch of section of valve. For example, a valve 4 inches diameter, having an area of 12·56 square inches, should have a spindle sufficiently large to be tested to $6\frac{1}{4}$ tons.

Hence, if the proof strain of good gun-metal be taken at 6 tons (which is quite high enough) per square inch, then,

$$\left.\begin{array}{l}\text{Diameter of Kingston valve spindle at}\\ \text{bottom of thread, ...}\end{array}\right\} = \frac{\text{diameter of valve}}{3{\cdot}46};$$

so that a 4-inch valve should have a spindle 1·15 inch diameter at its smallest section.

But the Admiralty do not require any valve to be tested above 12 tons; so that for mere test purposes, no spindle need have more than 2 square inches in section, or be more than $1\frac{5}{8}$ inch diameter at its smallest part; but since for very large valves a spindle of this size would not be stiff enough, the following rule for all valves above $5\frac{1}{2}$ inches diameter holds good:—

$$\text{Diameter of spindle} = 1\tfrac{5}{8} \text{ inch} + \frac{\text{diameter in inches} - 5\frac{1}{2} \text{ inches}}{16}.$$

Kingston valve-boxes and tubes are generally made of gun-metal; but this is not a necessity, except where hot water or steam is blown through them, when cast iron would be dangerous. If the body is of cast iron, of course the valve seat should be of brass, and the working parts bushed with brass.

Fig. 104 shows a good arrangement of Kingston valve for large sizes. It has a lifting nut secured in a bridge, as well as a handle on the spindle end; the former is used to start the valve or jam it in its seat, and the latter merely to open or shut it; the lock nut with handle is to secure it in any required position. In this figure the head is shown screwed on to the tube, and is such as is

necessary in wooden or composite ships; but when fitted to the skin of an iron ship, a flange is formed at the bottom of the conical part, as shown by the dotted lines. A much simpler and less expensive plan is to form the valve like an ordinary stop-valve with four wings, and the spindle inverted, that is, on the same side as the wings; the bottom part of the box is then only slightly

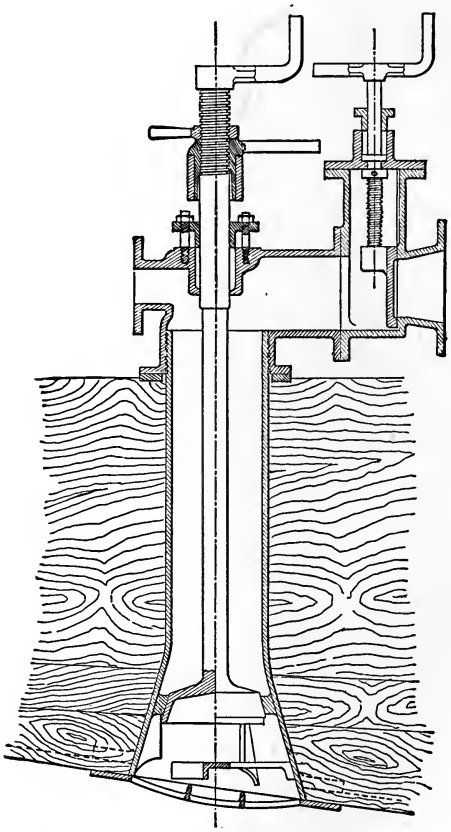

Fig. 104.—Kingston Valve.

conical, and much shorter—in fact, only sufficiently long to allow of the valve lifting a distance equal to one quarter of its diameter, and in this position leaving space between it and the grating for the free flow of water.

All inlet valves should be fitted with a brass grating, whose meshes should not exceed half an inch in breadth, the total area through them being at least 20 per cent. larger than the net area of the tube. In the Navy, Kingston valves are fitted to all inlets and blow-off pipes, and are always supplemented with a cock or valve attached to them.

Valves are fast taking the place of cocks for all general purposes, so that whenever convenient a valve may be fitted in lieu of a cock to even the smallest Kingston, but to large Kingstons a cock could not be fitted, and so it is usual to find an ordinary sluice valve. The spindles of these supplementary valves should always be within easy reach of the platforms, and in case of the very large ones, when possible, they should be carried so high as to admit of the valve being worked when the engine-room is flooded.

In the merchant service simple cocks are usually fitted to the skin of the ship direct, and when this is the case the same precautions should be taken as enumerated above, and extra care taken to protect them from injury, as they are very liable to damage from the flooring plates washing about when a considerable quantity of water is in the bilge and the ship rolling heavily.

For the larger inlets of a merchant ship an ordinary stop-valve, opening inwards, is usually fitted, the box being of cast iron. A good plan, so as to avoid a number of openings in the ship's skin, is to fit a single box with one stop-valve in it, and to this box fix the various cocks or valves necessary for the different requirements. For ships destined for a cold climate, a small cock can be fitted near the bottom of the box to admit steam to thaw any ice that may be blocking the orifice.

Discharge Valves should be fitted to all outlets through the ship's side, and they consist, as a rule, of simple non-return valves having spindles passing through the covers, so that the valves may be lifted or pressed down as required. Here again a number of holes through the skin of the ship may be avoided by connecting the smaller valves to the box of a large one above the valve itself. In many cases this method is a very good one, having advantages beyond that already named—viz., that the pipes can be shorter, and the valves standing clear of the frames of the ship are easy of access.

The Board of Trade require that all inlet and discharge valves shall be connected directly to the skin of the ship, and have no pipe or joint intervening (this rule, however, does not apply to the case of the smaller valves when attached to the box of a large one), and also that all discharge valves shall be placed above the load water-line.

The Admiralty, on the other hand, for obvious reasons, require all the discharge orifices to be below the water-line; and while in the merchant service the discharge valve-boxes are nearly always of cast iron, in the Navy they are invariably of brass.

It is not unusual to fit the smaller discharge valves as simple

non-return valves having no external spindle whatever; but this has the disadvantage that one is never certain if the valve is shut, and if not shut it is beyond control.

It is sometimes found convenient to fit, for large discharges, a *straight-through* valve in lieu of the ordinary mushroom-valve. This straight-through valve is an ordinary flap valve resting on a vertical or nearly vertical seat, and lifted by means of a horizontal spindle, which passes through a stuffing in the side of the valve-box, having inside a slotted lever connected by a pin to a pair of lugs on the back of the valve, and outside a hand lever for controlling the valve.

Bilge Valves.—As has been already said, too much care cannot be devoted to avoid all risk of flooding the ship by carelessness. An easy method of overcoming the difficulty in the case of pipes not greater than 4 inches diameter, is by means of the switch or three-way cock—that is, a cock having two side branches and a hollow plug with one orifice in the side and the other in the bottom, so that all water must pass by way of the bottom and one side only at one time. Suppose that a donkey engine is required to draw water from the bilge as well as from the sea, a three-way cock should be fitted so that its bottom is connected to the pump suction, one side branch connected to the sea inlet, and the other side branch to the bilge piping; it will then be easily seen that the two branches cannot be connected by the plug, and consequently, however careless the engineer may be, water cannot pass from the sea to the bilges. When, owing to the largeness of the piping, a cock cannot be fitted, non-return valves should be connected to the tail pipes leading to the bilge.

Communication Boxes.—All the bilge suctions should be led to a *communication box* placed in some convenient position in the engine-room, above the level of the flooring, so that the requisite changes of service of pumping may be easily and quickly effected.

The communication box (called sometimes a "directing" box) consists of a rectangular chest having as many valves in it as there are pumping stations or parts from which water is to be drawn; under each valve is a separate tail, to which the suction pipes are attached; the valves themselves are of the ordinary mushroom type, non-return, and arranged so that each may be shut close by screwing down a spindle on it. The box cover is so fitted by hinge bolts as to be easily and quickly opened for examination, and the joint made again.

To the upper part of the box the suction pipes of the pumps are fitted, so that the donkey engine and bilge-pumps may draw from the same set of pipes. Both bilge-pumps should not be connected direct to one box, as it not unfrequently happens that it is required to pump water separately from two compartments at the same time, or that one of the bilge-pumps may be required to deliver on deck. The lid of the communication-box should have inscribed legibly on it the lead of each valve.

Bilge Suction Piping is nearly always of lead, but the tails leading directly into the bilge should be of iron; cast iron is now often used instead of lead as less liable to damage, but it cannot be so easily cut in case of necessity. The Admiralty require all tail pipes to be of galvanised wrought iron; and all copper piping laid in the bilges to be covered with waterproof canvas varnished over, and otherwise insulated to avoid deleterious effects on the iron work from galvanic action. All suction pipes to the bilge should fit into rose-boxes of iron galvanised, and having an aggregate area through the holes at least twice that of the pipe. The cover of the box should be hinged, or so fitted that it can be opened and shut again very quickly. The boxes should also be so placed as to be easy of access. Bilge pump suction pipes should also be fitted with mud traps, consisting simply of a cast-iron box with a strainer and lid, in which the slight cessation of flow allows the deposit of the heavy dirt carried on so far with the water. All copper or brass work subject to the action of bilge-water, should have the connections made with *bronze* bolts and nuts. Iron quickly corrodes unless well protected; and Muntz metal has been found to decay in a very peculiar way, becoming so soft as to cut like plumbago. Naval brass, which is Muntz metal improved with a little tin, is suitable for this purpose. Every care should be taken to protect the metallic surfaces from the corrosive action of bilge-water, a good coat of Portland cement wash answering even better than paint or varnish.

When it is required to pass pipes — especially copper ones, through a watertight bulkhead, a good plan to adopt is to fit a short length of cast brass, having a flange at each end to connect to the pipes on either side, and a collar in the middle, about four inches larger in diameter than the flanges, to secure it to the bulkhead.

If pipes are likely to expand considerably, or to be in such a position that the working of the ship in a seaway would affect them, it is better to pass them through stuffing-boxes in the bulkhead. Very small pipes can be connected by union nuts to the bulkhead joint above described, thereby decreasing the size of the hole to be cut and the collar for closing it.

Auxiliary Pumps. — In the merchant service, as a rule, one donkey engine is found sufficient for all purposes, and consequently its pipes should be so arranged that it can draw water from the sea, the bilges, and the hot-well; and deliver to the boilers, overboard, and to the deck. In many cases, too, the donkey engine is fitted to pump into the condenser, that it may be charged with cold water before starting the engines. In merchant steamers having ballast-tanks, a second larger donkey is fitted to pump out the tanks, and also the bilges, and to deliver to the condenser, so that the other or usual donkey delivers on deck and to the boilers only. In the Navy there are always two donkey engines, one for supplying the boilers only; and the other, called usually the fire

engine, pumps from the sea to the deck, and from the bilges overboard.

The Admiralty have done away with the engine feed-pumps, and substituted for them a double-donkey pump, which can be worked at such a speed as to just keep the boilers supplied, whatever be the speed of the engines.

In addition to the donkey engines there is usually a hand pump, which, in the Navy and large merchant ships, is so arranged that it can be worked from the main engines, and has pipes, &c., fitted, that it may do the same duties as both the donkey engines; and in the Navy, in addition to this, the boilers can be emptied by it, instead of being "blown down."

The Board of Trade require that one of the bilge-pumps shall be so fitted that it can pump water on deck in case of fire.

The engine-room pumps should have the necessary piping, valves, &c., that water may be drawn from each hold or compartment separately, from each side of the engine and boiler rooms, and from any other part of the ship liable to leakage or lodgment of water.

In addition to the above-mentioned means of freeing the ship from water, it is usual to have a bilge injection, so that the air-pump may be utilised; and in surface-condensing engines the circulating-pump has a suction-pipe leading from the bilge, so that when necessary it may draw from there alone. The chief danger to be apprehended when either the air or circulating pump draws from the bilge is, that in cases of flooding of the engine compartment, the small coal is washed out of the bunkers, and soon chokes the condenser-tubes as well as the pumps themselves, unless the rose-boxes have sufficiently small holes to prevent it; and when the rose-box holes are so small as to prevent small coal passing through them, they soon choke, and render the pumps useless for the time.

Water Service.—An arrangement of water service is made in every ship, so that water can be applied to all bearings and slides, and also that a hose may be used in case of fire or any other emergency. This generally consists of a main pipe from a sea-cock leading into a convenient position, and having branches with a stand pipe and brackets at each main bearing, crank-pin, and group of eccentrics. The water for the tunnel-bearings and thrust-bearing is usually taken from the inside of the stern tube, thereby serving the additional purpose of circulation in the tube.

Expansion Joints.—Great care should be taken that all pipes conveying hot water or steam, and thereby liable to great change of temperature, should have provision made for the consequent expansion. Expansion joints of all kinds are, however, objectionable on one or two grounds, and therefore should be avoided unless absolutely necessary. If small pipes have bends between the rigid connections, the expansion is allowed for by the increase in their curvature; but in all large pipes, and wherever the bends are but very slight, expansion joints should be fitted, for very serious accidents have occurred in consequence of their absence. When the

length of piping to undergo expansion is not great, the ordinary bellows joint is preferable, as being free from any liability to leak; but when the expansion is very great an ordinary stuffing-box and gland, or Fawcett joint, must be resorted to. This latter should be avoided for exhaust pipes to a condenser, as they are very liable in this case to leakage which is not easy to detect.

Again, in ships of light construction, which undergo a considerable amount of racking in a sea-way, no length of pipes should be without some provision for expansion and contraction, and all extra rigidity should be avoided, that they may meet the changes in ship.

Safety Collars.—It has sometimes happened that pipes have blown out of a Fawcett joint, owing to there being a bend near it on which the steam pressure acted; in all cases of this kind, a collar should be brazed to the pipe, some 12 to 18 inches from the bend, through which bolts pass connecting it to the flange of the stuffing-box on the other pipe, that it may not draw out.

Few things look worse in an engine-room than heavy broad flanges to the copper pipes, especially as they are quite unnecessary. The breadth of the flange need not exceed three times the diameter of the bolts through it, and its thickness should equal the diameter of the bolts. The pitch of the bolts should be from four to six times their diameter, depending on the steam pressure.

The Admiralty require all copper pipes to be in accordance with a graduated scale (*vide* Chap. XXII.)

In the merchant service, the main steam pipes are usually from No. 1 to 6 B.W.G. thick, depending on their diameter and the pressure to which they are exposed.

It is a very common practice to make pipes of the same thickness, whatever be their size, for the same service. No doubt, for large engines, these thicknesses are not excessive; but when a pipe 2 inches in diameter, to withstand the same pressure as one of 8 inches, is made of the same thickness, there seems an absence of reason.

The Admiralty specifications allow of brass pipes being used in certain places, but on account of the difficulty of working them and brazing on the flanges, it is seldom employed.

In the merchant service, cast iron is used for large pipes conveying water and exhaust steam, and occasionally for the main steam and feed pipes, and where cost and stiffness are of more consideration than weight, they may be used with advantage, but although there seems an element of danger in them, experience has proved them to be reliable and safe with even high pressures of steam.

The joints of all pipes should be in such positions that they are easy of access.

CHAPTER XVII.

BOILERS, FUEL, ETC., EVAPORATION.

THE boiler proper consists essentially of two parts; the one the fire-place in which the fuel is burnt and heat generated, the other in which the heat is applied to boil the water and convert it into steam.

The part where the fuel is burnt is called the *furnace*, and that on which it is laid is called the *grate*.

The quantity of steam generated will depend, in the first place, on the quality of the fuel, and on the quantity burnt. The quantity of fuel consumed depends on the area of grate, and the draught or flow of air into the furnace.

The *efficiency* of the furnace depends on its capability of burning with as little waste as possible the whole of the fuel in it, and that without superfluity of air; also, to produce perfect combustion there must be as little waste of heat as possible in obtaining the necessary draught. The portion of heat generated which is applied to the production of steam is called the *available heat*.

Every-day experience proves that a grate may consume a large quantity of fuel without thoroughly burning it, and that even when the fuel is thoroughly burnt, only a comparatively small portion of it may be usefully employed.

The chief loss is at the chimney, which is a rough and ready way of inducing the air to flow into the furnaces with sufficient velocity to cause the fuel to burn; but it is an exceedingly wasteful one, and will, some day, undoubtedly be superseded by a more scientific and economical apparatus. One pound of fairly good coal *can be made* to evaporate 14 to 15 lbs. of water; but in the best of marine boilers, only 10 lbs. of water per pound of coal are evaporated with every care taken, showing that the efficiency of the boiler is less than 0·7 from this point of view.

Efficiency of the Furnace.—Loss may take place at this part of the boiler from the following causes:—

(1.) *Bad stoking*, whereby fuel is lost by falling through the bars only partly consumed, and is thrown away with the ashes. This generally takes place with good fuel from its brittleness; but may, in some cases, be due to carelessness in laying the fire-bars. Too much cannot be said of bad stoking, as from this cause alone the best-designed and made boiler may prove most inefficient.

(2.) *Want of air*, whereby the whole of the fuel is not consumed, but part of it passes off through the funnel in the form of smoke, part is deposited as soot in the tubes, and part is burnt in the smoke-box or at the mouth of the funnel. This is sometimes due to bad design and want of proper means of regulating the supply

of air; but it is more frequently due to bad stoking, and careless ness on the part of the fireman in using the means provided.

(3.) *Excess of air*, whereby some of the heat is employed in raising the temperature of the superfluous air, and thereby doing no good. This is generally caused by bad stoking, the bars being uncovered in parts of the grate, and so admitting a large inflow of air.

(4.) *Radiation* through the mouth when the doors are open for firing, and any radiation through openings for other purposes. This cannot be avoided, and should be comparatively small.

The first three of these sources of loss cannot be said to be unavoidable, as with ordinary care the loss from them should be very small compared with the chief loss.

Chimney Draught.—To obtain an efficient draught in a chimney or funnel, the temperature at its base should be about that of melting lead, or nearly 600°. Professor Rankine states that "the best chimney draught takes place when the *absolute* temperature of the gas in the chimney is to that of the external air as 25 to 12."

That is, if T be temperature of the air, then,

$$\text{Absolute temperature at the base of funnel} = \frac{25}{12} \times (461° + T),$$

or temperature according to thermometer (Fahrenheit),

$$= \frac{25}{12}(461° + T) - 461° = 2{\cdot}08\ T + 500°.$$

Taking the temperature at 60°, the proper heat at the base of the funnel is then $2{\cdot}08 \times 60 + 500$, or 625°. Now, the heat in a furnace having a natural draught is usually about 2400°, and if the heat at the exit from the boiler to obtain the necessary draught is 600°, it follows that 25 per cent. of the total heat of combustion is wasted owing to this. If, instead of a chimney, a draught were produced artificially, say by means of a blowing engine, a very considerable portion would be saved.

Fuel.—The usual fuels used on board ship are *coal* of various descriptions and qualities, *wood* in those parts of the world where it is plentiful and coal scarcer, and *patent fuels* or combinations of coal with other substances. *Coke* is seldom used, and *oil*,* although comparatively cheap, and in some instances most convenient, has met with very little favour, notwithstanding a very strong advocacy of it by influential persons. Mineral oil is capable of producing a large quantity of heat, is clean and convenient for stowing, and therefore suitable for yachts and passenger steamers; but it is somewhat dangerous, and no very satisfactory or reliable method of burning it has yet been devised.

Of coals there are several distinct kinds, and many more qualities. There are five distinct varieties, known as—

(1.) *Anthracite*, consisting almost entirely of free carbon, generally

* Mineral oil refuse called astatki is used on the "Volga" and "Caspian" and now also in ships trading to the Black Sea. Creosote refuse is also being used successfully in this country.

jet black in appearance, but sometimes greyish like black lead, has a specific gravity generally of about 1·5, but sometimes as high as 1·9; it burns without emitting flame or smoke, but requires a strong draught to burn at all. It is capable of evaporating (theoretically) nearly 16 times its weight of water, but to obtain good results from it careful stoking is necessary, as when suddenly exposed to heat it is very friable, breaks up into small pieces, and falls through the bar-spaces if disturbed much, as it does not cake. The fires should be worked light when using it, and the coal carefully spread. The heat is very intense and local, so that furnaces intended to burn it should be high in the crowns.

(2.) *Dry bituminous coal* contains from 70 to 80 per cent. of carbon, and about 15 per cent. of volatilizable matter; its specific gravity is from 1·3 to 1·45. It burns easily and swells considerably while being converted into coke. The harder kinds do not burn so readily, nor do the pieces stick together so easily when burning, and are generally better adapted for marine boilers.

(3.) *Bituminous caking coal*, containing from 50 to 60 per cent. of carbon, is generally of about the same specific gravity as the dry bituminous; it contains, however, as much as 30 per cent. of volatilizable matter, and consequently develops hydro-carbon gases; it burns with a long flame, and sticks together in caking, so as to lose all trace of the original forms of the pieces. It requires special means to prevent smoke.

(4.) *Cannel coal*, or *long flaming coal*.—This is seldom used for steam purposes, as it gives off large quantities of smoke, and is very scarce. It is the best coal for the manufacture of gas.

(5.) *Lignite*, or *brown coal*, which is of later formation than the other coals, and in some instances approaches to a peaty nature. It contains, however, when good, from 56 to 76 per cent. of carbon, and has a specific gravity from 1·20 to 1·35. It also contains large quantities of oxygen, and a small quantity of hydrogen. The commoner kinds of lignite are poor, and contain as little as 27 per cent. of carbon, and therefore are not suitable for steaming purposes.

In some parts of the world, where coal cannot be easily obtained, wood is used for fuel, and the furnace specially constructed to burn it; it contains, on the average, when dry, about 50 per cent. of carbon, 41 of oxygen, and 6 of hydrogen.

Patent Fuels consist principally of coal, and their value depends therefore on the quality of the coal from which they are made. To utilise the small coal from the mines and yards was a somewhat difficult problem, as it could not be conveniently transported, and is difficult to burn in an ordinary furnace. By mixing a small quantity of tar with it, and baking the mixture in moulds, a hard brick is produced, which is easily handled and burns well. There are many other ways of manufacturing patent fuel from small coal, but the result is the same—viz., a hard brick.

The Value of a Fuel is determined by its chemical composition. All fuels contain more or less of carbon, most have also hydrogen

and oxygen in various proportions, and some small quantities of nitrogen, sulphur, &c.

These substances are usually designated, as in chemistry, by a symbol, which is generally the initial letter, and they combine in certain fixed quantities, called their *chemical equivalents.* Thus—

Carbon,	symbol	C,	chemical	equivalent	12.
Hydrogen,	„	H,	„	„	1.
Oxygen,	„	O,	„	„	16.
Nitrogen,	„	N,	„	„	14.
Sulphur,	„	S,	„	„	32.

A pound of carbon is capable of developing, during combustion, a certain quantity of heat, called the *total heat of combustion,* and is measured by *units of heat.*

The British standard unit of heat is defined as *that quantity of heat which will raise one pound of pure water one degree Fahrenheit in temperature.*

The total heat of combustion of one pound of hydrogen is measured in the same way, and it is also found that the *total heat of combustion of any compound of carbon and hydrogen, is the sum of the quantities of heat which the hydrogen and carbon contained in it would produce if burnt separately.*

If a fuel contains oxygen as well as hydrogen, it is known that eight parts by weight of the former unite with one of the latter to form water, which exists as such in the fuel, and *does not add to the total heat of combustion.* If there is, however, an excess of hydrogen beyond what is required to form with the oxygen the water, the *remaining hydrogen does add to the total heat of combustion,* and may be reckoned in estimating its value.

Hydrogen gas requires 8 pounds of oxygen, and consequently 36 pounds of air to consume it; its total heat of combustion is 62,032 units of heat, and consequently it can evaporate 64 pounds of water at 212°.

Carbon, when fully burnt, requires only 2·7 pounds of oxygen, or 12 pounds of air to consume it—that is, to convert it into carbonic acid: its total heat of combustion is 14,500 units of heat, and can therefore evaporate 15 pounds of water at 212°. If, however, it is only partially burnt or turned merely into carbonic oxide, half the quantity of air is consumed, and the total heat of combustion is only 4,400 units of heat.

Sulphur exists only in small quantities in good coal, and the total heat of combustion is only about 4000 units.

From this information, the following rule is deduced for the total heat of combustion for substances containing carbon, hydrogen, and oxygen.

Total heat of combustion of one pound of fuel

$$= 14{,}500 \left\{ C + 4{\cdot}28 \left(H - \frac{O}{8} \right) \right\} \quad . \quad . \quad (1.)$$

and

Theoretical evaporative power of one pound of fuel

$$= 15 \left\{ C + 4{\cdot}28 \left(H - \frac{O}{8} \right) \right\}.$$

C being the weight of carbon, H that of hydrogen, and O that of oxygen, all expressed in fractions of a pound.

Example.—To find the evaporative power of a pound of Welsh coal, whose constituents are, carbon 85, hydrogen 4, oxygen 2·5, others 8·5.

$$E = 15\{0{\cdot}85 + 4{\cdot}28\ (0{\cdot}04 - \tfrac{0{\cdot}025}{8})\}$$

$$= 15{\cdot}125 \text{ pounds.}$$

The quantity of air required to burn a pound of fuel may also be estimated in a somewhat similar way.

Weight of air required to *burn* one pound of fuel

$$= 12\,C + 36 \left(H - \frac{O}{8} \right).$$

To *burn* ordinary coal or coke, 12 pounds of air is required on the average.

To provide for the *dilution* of the gaseous products so that free access is given to the air to reach the fuel, 12 pounds more are required; so that *to consume one pound of fuel in practice requires* 24 *pounds of air.*

At the temperature of 62°, the volume of one pound of air is 13·14 cubic feet; therefore, to consume 1 pound of coal or coke 315 cubic feet of air is necessary. If the draught is very good, such as found with artificial means, 250 cubic feet is sufficient.

The following Table (XVII.) gives the composition, total heat of combustion, and evaporative power of the various fuels.

Rate of Combustion.—The quantity of coal burnt on a square foot of grate depends partly on its nature, and principally on the draught. Some hard coals, like anthracite, require a very strong draught to burn at all, and some qualities of anthracite burn slowly even then. Bituminous coal burns much more freely than anthracite, and some of the softer kinds consume very rapidly. All coal burns very much more rapidly with a strong draught, as might be supposed, and for that reason, when only a comparatively small boiler can be fitted to supply steam, artificial draught is a necessity. It has also been stated that when the draught is very strong, *a smaller weight of air suffices* to complete combustion.

Artificial Draught.—There are four general methods of causing an artificial draught: (1.) The steam blast, by which the products of combustion are ejected from the funnel in the same way that the exhaust steam from a locomotive produces a draught; (2.) by

TABLE XVII.—FUELS.

Description.	Carbon.	Hydrogen.	Oxygen.	Sulphur.	Ash, &c., including Nitrogen.	Total Heat of Evaporation.	Evaporative Power from and at 212°	One Ton occupies in Cubic Feet.
						Units.	Pounds.	
Welsh—Ebbw Vale,	87·78	5·15	0·39	1·02	3·66	16221	16·79	...
,, Powell's Duffryn,	88·26	4·66	0·60	1·77	4·71	15788	16·34	...
,, Llangeunech,	84·97	4·26	3·50	0·42	6·85	14682	15·20	...
,, Græigola,	84·87	3·84	7·19	0·45	1·91	14130	14·63	...
,, Average,	83·87	4·79	4·15	1·43	5·89	14858	15·52	42·7
Newcastle Average,	82·12	5·31	5·69	1·24	5·12	14820	15·32	45·3
Derbyshire Average,	79·68	4·94	10·28	1·01	4·06	13860	14·34	47·4
South Yorkshire,	81·88	4·83	7·47	0·54	2·95	14296	14·71	46·0
Lancashire Average,	77·90	5·32	9·53	1·44	6·18	13918	14·56	45·2
Scotch ,,	78·53	5·61	9·69	1·11	5·03	14164	14·65	42·0
Irish Anthracite,	80·03	2·30	...	6·76	11·03	13302	14·5	35·7
American Anthracite,	88·54	...	...	0·04	8·60	...	...	42·35
,, Bituminous,	73·21	...	...	0·42	11·27	...	...	42·44
French Anthracite,	86·17	2·67	2·85	...	8·56	14038	14·53	40·00
,, Hard Bituminous,	88·56	4·88	4·38	...	2·19	15525	16·10	42·75
,, Caking ,,	87·73	5·08	5·65	...	1·54	15422	16·00	42·75
Chilian Coal,	63·56	5·43	14·84	2·50	14·13	11030	11·68	...
Indian ,, Average,	70·20	...	...	...	22·9	...	...	...
Patent Fuel—Warlichs,	90·02	5·56	...	1·62	...	16495	17·07	...
,, ,, Average,	83·40	4·97	2·79	1·26	6·01	15000	15·66	34·4
Lignite—Russian,	73·72	6·09	20·19	ash neglected		14263	14·7	...
,, Poor kinds,	66·51	4·72	28·77	,,	,,	11444	12·0	...
Coke—Best Durham,	85 to 92	...	...	0·25 to 2·0	4 to 12	12832	13·30	...
Woods—Beech,	49·36	6·01	42·69	...	1·91			94·4
Oak,	49·64	5·92	41·16	...	3·26	average		94·4
Birch,	50·20	6·20	41·62	...	1·96	when dry		106·1
Fir,	51·79	6·28	41·93	...	...	7800	8·1	...
Willow,	49·96	5·96	39·56	...	4·33	...	...	124·7
Peat—Fairly dry,	59·6	5·80	29·6	0·3	4·7	9951	10·30	...
Petroleum,	84·7	13·1	2·2	...	...	20240	20·33	...

an air-blast delivered under the fires with a closed ash-pit; (3.) by making the boiler room air-tight, and forcing air into it by a fan, until the pressure is above that of the atmosphere, the only vent being through the furnaces to the funnel; and, (4.) by a fan placed near the base of the funnel which draws from the smoke-box and delivers into the funnel; this is known as the *induced draught system.*

The first of these methods is the older and commoner form; it is not very effective, and by no means economical, it also quickly wears out the funnel; but it has the merit of being cheap in first cost, and does well enough if it is only required to be used occasionally to quicken the fires in getting up steam, or during a hot day when steaming with a fair wind, or no wind at all. The second plan has the merit of simplicity, and can be made very effective if properly arranged. There is no danger with it, and it may be applied to any kind of ship. The third plan is one which is universally adopted in war-ships, and recently in some large and small merchant ships. It is a costly plan, and necessitates a complete change in the ship arrangements in the boiler compartment. It is undoubtedly the most efficient plan of artificial draught, but the cost should enter into the calculation of *practical* efficiency, and also the risk run. The firemen are imprisoned in the stokehole, as access to, and egress from it are through an air-tight lock, and when a panic arises the result is often most serious. The fourth plan is simple and less costly, and it is claimed to be less trying to the tubes, &c., but why is not obvious. It is being used both in the Navy and merchant service.

Quantity of Fuel Burnt on the Grate.—With good stoking and the ordinary funnel draught, as much as 20 pounds of coal can be brunt per square foot of grate per hour, and under most favourable circumstances, 22 to 25 pounds. In the mercantile marine, 15 pounds is the average amount burnt on a square foot of grate in an hour when working economically, and all calculations for a merchant ship should be based on this; for although 20 pounds can be *consumed* when the fires are forced, or on a very windy day when the draught is good, no grate should be supplied with more than 15 pounds to obtain complete combustion,* and this is all that will be *consumed* on a sultry day. With moderate forced draught, 20 to 30 pounds can be readily burnt on a square foot of grate, and 30 to 50 pounds with good air pressure either *forced* or *induced*, and with short grates and good stoking even as much as 60 pounds. A locomotive with a draught produced by the exhaust steam can burn, as a rule, 65 pounds of coal per square foot of grate; and the modern express engine burns as much as 80 pounds.

The coal consumed in torpedo boats with the closed stokehole, and a pressure of air *in the stokehole* above that of the atmosphere equal to 6 inches of water, is as much as 96 pounds per square

* Good results can be obtained with a consumption of 20 pounds per foot of grate when the grate is not more than 1·33 of the diameter of the furnaces in length.

foot of grate, and is even 62 pounds at a pressure of three inches only. Mr. Thorneycroft eclipsed this in the yacht "Gitana," where 138 pounds of coal were burnt per square foot of grate; this is exceedingly high, and is only such as can be obtained under the most favourable conditions with every care taken in the ventilating arrangements; the evaporative power under such conditions is by no means high, although, perhaps, higher than could have been anticipated. In the Navy an air pressure of $\frac{1}{2}$ inch is allowed to count as natural draught, and 2 inches is the limit allowed for forced draught in large ships. With those pressures the combustion is very good and evaporative power very fair.

Size of Funnel.—The natural draught, or that obtained by means of a funnel, is very much influenced by the area of its transverse section, and by the height or distance of its top from the level of the fire-bars. The draught in a funnel is due to the difference in density of the column of gas in it from that of the surrounding atmosphere; the contents of the funnel rise upwards, on the same principle that a bubble of air rises through water. The density depends on the temperature of the gases at the funnel base, and for this reason a good draught cannot be obtained without a comparatively high temperature. The good draught observable on a windy day is due to the tendency to form a vacuum at the mouth of the funnel, by the wind blowing across it. Professor Rankine has given the following formulæ for chimney draught:—

Let w be the weight of fuel burned in a given furnace per second in pounds.

V_0 the volume at 32° of the air supplied per pound of fuel.

τ_0 the *absolute* temperature at 32° Fahr., which is 461° + 32°,

τ_1 the absolute temperature of the gas discharged by the chimney, whose sectional area is A; then

Velocity of the current in the chimney in feet per second is

$$= \frac{w \times V_0 \times \tau_1}{A \times \tau_0}$$

The density of that current in pounds to the cubic foot is very nearly

$$= \frac{\tau_0}{\tau_1}\left(0{\cdot}0807 + \frac{1}{V_0}\right);$$

that is to say, from 0·084 to 0·087 × ($\tau_0 \div \tau_1$).

Let l denote the whole length of the chimney, and of the flue leading to it, in feet;

m its "hydraulic mean depth;" that is, its area divided by its perimeter; which, for a square or round flue and chimney, is one quarter of the diameter;

f, a coefficient of friction, whose value for currents of gas moving over sooty surfaces is estimated by Peclet at 0·012;

g, a factor of resistance for a passage of air through the grate, and the layer of fuel above it; whose value, according to the experi-

ments of Peclet on furnaces burning from 20 to 24 pounds of coal per square foot of grate, is 12.

Then according to Peclet's formula,

The *head* required to produce the draught in question is

$$= \frac{\mu^2}{2g}\left(1 + G + \frac{f.l}{m}\right),$$

which, with the values assigned by Peclet to the constants, becomes

$$= \frac{\mu^2}{2g}\left(13 + \frac{0{\cdot}012 \times l}{m}\right).$$

When the *head* is given the value of μ may be calculated, and then,

Weight of fuel which the furnace is capable of burning *completely* per hour

$$= \frac{\mu \times A \times \tau_0}{V_0 \times \tau_1}.$$

It is usual to reckon the *head* by taking one inch of water as the unit; then,

$$\text{Head in inches of water} = 0{\cdot}192 \times h \times \frac{\tau_0}{\tau_1}\left(0{\cdot}0807 + \frac{1}{V_0}\right).$$

Mr. Thorneycroft has found, by careful experiment with steam launches and torpedo boats working with a *plenum* (that is, with a closed stokehole into which air is forced), "that of the initial pressure, the resistance of the tubes accounts for about seven-tenths of the whole, the resistance of the fire and fire-bars being only about one-tenth;" and that "the pressure in the funnel, as measured, was sensibly equal to atmospheric pressure."

Professor Rankine also stated that if H be the height of the funnel, τ_2 the absolute temperature of the external air, then :—

Head produced by chimney draught

$$= H\left(0{\cdot}96\frac{\tau_1}{\tau_2} - 1\right).$$

or, taking h as the head,

Height of chimney required to produce a given draught

$$= h \div \left(0{\cdot}96\frac{\tau_1}{\tau_2} - 1\right).$$

The velocity of the gas in the chimney is proportional to $\sqrt{h}$, and therefore to $\sqrt{0{\cdot}96\tau_1 - \tau_2}$.

The density of that gas is proportional to $\frac{1}{\tau_1}$.

The weight discharged per second is proportional to velocity

× density, and, therefore, to $\frac{\sqrt{0{\cdot}96\tau_1 - \tau_2}}{\tau_1}$; which expression becomes a maximum, when $\tau_1 = \frac{25}{12}\tau_2$. Therefore the best chimney draught takes place when the absolute temperature of the gas in the chimney is to that of the external air as 25 to 12.

When this condition is fulfilled $h = H$.

That is, the height of the chimney for the best draught is equal to the *head* expressed in hot gas, and the density of the hot gas is half that of the air.

In practice the size and height of chimney are governed rather by circumstances than by scientific investigation;* the diameter is fixed by arbitrary rules based on successful practice, and the height such as suits the appearance or service of the ship.

Evaporation.—The heat of the gases from the furnace is to be absorbed by the surfaces with which they come in contact on their passage to the chimney, and the efficiency of this part of the boiler depends on the capability of those surfaces to readily take up the heat, on the material to transmit it by conduction to the inner surface or that with which the water is in contact, and on that inner surface being in such a condition as to give up the heat to the water. The *internal* efficiency of the boiler depends on the convection or circulation of the water in the boiler, whereby fresh portions are successively brought in contact with the hot surfaces. The importance of this latter factor is seldom appreciated in estimating the efficiency of a boiler, although now some engineers are giving it first consideration.

When the furnace is internal, that is, when it forms a part of the boiler proper and is surrounded with water, a large proportion of the total heat of combustion is absorbed by it, partly by direct contact with the hot fuel at the sides, and partly by radiation from the glowing surface of the incandescent fuel when coked. The furnace also absorbs heat from the hot gases passing along its surfaces.

The furnace or fire-box of a locomotive boiler is usually made of copper, and it has been proved by experiment that a very large proportion of the whole heat generated in it is absorbed by it, consequently its evaporative efficiency is very high. The furnace of the ordinary marine boiler is of steel, which is not so good a conductor of heat as copper, and, therefore, does not transmit such a large proportion of the total heat of combustion, although its evaporative power is still high.

Combustion.—The combustion of the fuel is not always *completed* in the furnace of the marine boiler, as the gases distilled from it during the process of coking escape to the chamber beyond the furnace before sufficient air has been supplied; and also it sometimes happens that the temperature *above the fuel* is not sufficiently high to cause ignition. The carbon unites in the furnace

* A convenient rule is $H = {\cdot}007\left(\frac{C}{A}\right)^2$; or $A = \frac{C \times {\cdot}084}{\sqrt{H}}$. H, is height in feet; A, the area of section in square feet; and C, the consumption in pounds per hour of fuel on the grates connected to the chimney.

with sufficient oxygen to form only carbonic oxide, and this flows into the combustion chamber; if then a further supply of air is found there, another portion of oxygen is taken up, and carbonic acid gas is formed; that is what usually takes place with bituminous coal, and unless this second supply of air is provided, the combustion of a large portion of the fuel is not completed in the boiler. If the fire is completely covered with *green*, that is, fresh fuel, the part next the hot surfaces parts with its volatile elements, which rise and become cooled in so doing, so that when the gas comes in contact with the oxygen of the air, the temperature is not high enough to cause them to chemically unite, that is, to ignite, and consequently they merely mix mechanically and flow on until they pass out at the mouth of the funnel and show as smoke.

When, however, by careful stoking and regulating the supply of air, so that combustion is completed in the combustion chamber, the evaporative power of that part of the boiler is high, and with the furnaces is the most valuable part of the boiler for transmitting heat to the water.

Heating Surface.—As has been stated, the efficiency of the heating surface of the boiler depends on the material, its thickness, and on the state of the surfaces in contact with the hot gases and water. The furnaces and combustion chambers are of iron or steel, whose conductivity, when pure, is inferior to that of copper, but is still good; it is, however, very materially affected by its internal condition, that is, by its want of homogeneity. The iron best adapted for the internal parts of a boiler is peculiarly liable, from the method of manufacture, to lamination; the metal instead of being solid and homogeneous, consists of a series of layers or *laminæ* separated by thin films of oxide, and in some cases by films of slag, which are silica and iron oxide. The iron oxide is not so good a conductor of heat as the pure metal, and the slag is a very bad conductor. When the latter occurs, its presence is often detected by the formation of blister; if the blister is near the fire the metal is soon burnt, as the slag and gas formed in the blister fail to transmit the heat applied to the metal.

Steel, or ingot iron, as it might be more properly called, is practically homogeneous and free from slag; it is therefore in practice a better conductor of heat, and less liable to blister, if not altogether free from such defects.

The superior evaporative power of the furnace is due in great measure to the cleanness of the surface exposed to heat; there is no deposit of soot or ash on it, and the smallest possible amount of oxide; the combustion chamber also is generally in the same condition. The roughness of the surface exposed probably increases its power of receiving heat, not so much from any abstract virtue in that state, as from the *actual surface* being greater than if smooth. Very much depends on the condition of the inside surface exposed to the water; if it is quite clean and *smooth*, it is not so efficient as slightly dirty and rough; the best condition being roughness

with freedom from coating of bad conductors. If a metallic surface is smooth and clean, evaporation from it is slow and intermittent, because on it is formed a film of steam, which is a bad conductor, and this will only disperse when its buoyancy overcomes the attraction; when the attraction is overcome, the steam rises suddenly *en masse*, the surrounding water then flows into its place, when a film is again formed, and a bubble accumulates as before. If, on the other hand, the surface be rough, the film is broken up by numerous points on the surface, which serve as accumulators and starting points for myriads of small bubbles; these are formed quickly, rise freely and continuously, giving a rapid and steady supply of steam. It is for this reason that many boilers *prime*, that is, work with violent ebullition, when quite new.

Tube Surface.—The tubes of a marine boiler present the greater portion of the total heating surface, and it is to this part that great attention is required, both in designing and working a boiler. They are usually made of iron in the mercantile marine, and of steel in naval boilers. The conductivity of the brass, which was formerly used in the Navy, is theoretically double that of the iron; but in practice with foul surfaces, there is not so great a difference, their relative value being then about 3 to 2; to obtain, therefore, results commensurate with their extra cost, brass tubes should be kept very clean.

Much stress is often laid on certain experiments which have been made to show the relative evaporative power of certain portions of the tubes, to prove thereby that the final foot, or two feet, of tube is practically useless in *every* boiler. It is not very surprising to find that the first foot of tube has a high evaporative power, and that the power decreases rapidly the farther removed the portion is from the furnace or combustion chamber. Considering that the temperature of the gas on entering the tube is 2000° to 2400°, and on leaving it should be not more than 600°, while the temperature of the water surrounding the tube is very nearly the same at every part, the transmission of heat should be very much more at the entering end than at the other; the end next the funnel is also more liable to get dirty from deposit of soot, &c., and so to rapidly fall off in efficiency. But in continuous practice it will not be found that there is such a large difference in the value of the two ends of the tubes, because the end at which there is the rapid evaporation soon becomes covered with scale, and falls off in efficiency; the temperature is then not so much reduced after passing through the first portion, and for this reason the last portion will be found to have a higher efficiency than before. The size of tube has also some influence on its efficiency, for whereas the surface increases as the diameter, the contents increase as the square of the diameter. If a tube, then, of 4 inches diameter be substituted for two of 2 inches diameter, the surface is the same, but the capacity is doubled; if the rate of flow be the same in both cases, the 4-inch tube will pass twice the quantity of gas through it that flows through the two 2-inch ones, and have

only the same surface to absorb heat from it. If the quantity flowing through the tubes be the same in both cases, the 4-inch tube is still at a disadvantage, inasmuch as the mean distance of the gas from its surface is greater than that in the 2-inch ones.* The velocity through the small tubes will, in the latter case, be double that in the 4-inch one, and will therefore cause a brisker circulation of the hot gas, and the liability of soot and ash deposit is considerably reduced. Hence tubes of smaller diameter are used with advantage with forced draught, for the same evaporation is effected with smaller amounts of surface.

Evaporative Power.—The probable evaporative power of a boiler may be found approximately by the following formula :—

Let e_1 be the *theoretical* evaporative power of the fuel, F the weight of coal burned on the grate in pounds per hour, and K the total heating surface in square feet; then

Pounds of water evaporated per pound of fuel burnt

$$= 1{\cdot}833 \left(\frac{K}{2K+F}\right) e_1.$$

Example.—To find the evaporative power of a boiler which burns a fuel whose theoretical evaporative power is 15, the number of pounds burnt per hour on the grate is 800, and the total heating surface is 1000.

Here

$$E = 1{\cdot}833 \left(\frac{1000}{2000+800}\right) 15, \text{ or } 9{\cdot}825 \text{ lbs.}$$

The efficiency of the boiler is, by this rule,

$$1{\cdot}833 \left(\frac{K}{2\,K+F}\right), \quad \text{or } 0{\cdot}655.$$

This rule is only approximate, however, because the heating surface is not always wholly *real* heating surface, but only nominal; many boilers as made have given worse results than have been obtained after the removal of tubes, which very materially decreased the nominal heating surface. If a boiler has just sufficient surface to absorb heat from the gases, so that the temperature at the funnel base is only such as is sufficient to produce the required draught, then the heating surface is effective; any surface added to this is superfluous, and in very many cases does positive harm.

* The *serve* tube supplied by Messrs. J. Brown & Co., Sheffield, meets the case and permits of large tubes being used with advantage.

CHAPTER XVIII.

BOILERS—DESIGN AND PROPORTIONS.

THERE are four distinct classes of marine boiler now in use, each of which may be subdivided in various ways. These are—

(1.) The *rectangular* or *box boiler*, for pressures not exceeding 35 pounds, and seldom made for over 30 pounds (fig. 105).

(2.) The *cylindrical* boiler with return tubes, made for pressures up to 125 pounds.

(3.) The *locomotive* boiler, having tubes extending in line beyond the fire-box or combustion chamber, made for pressures up to 150 pounds.

(4.) The *tubulous* boiler, composed wholly of tubes and their connections, made for pressures up to 300 pounds.

The Rectangular Boiler was made in two distinct ways, and known as a *dry-bottom* or *wet-bottom* boiler. The wet-bottom boiler is so called because the furnaces are inside, and independent of the shell, and wholly surrounded with water; that is, the furnaces have wet bottoms.

The dry-bottom boiler differs from this, inasmuch as the sides

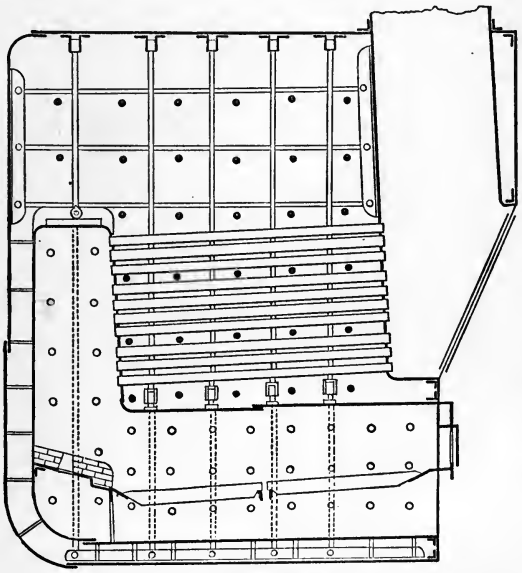

Fig. 105.—Rectangular Boiler.

of contiguous furnaces are united at the bottom, so as to form a water space between them, and each furnace is then devoid of a bottom, except the plate fitted to retain the ashes, &c.

When steam of 30 pounds pressure only was used, the dry-bottom boiler was generally found in merchant ships, while the wet-bottom boiler was always employed in the Navy.

The dry-bottom boiler is lighter than the other, as there is less plating, and it contains less water, and it is also somewhat cheaper to make, although the difference in cost is very trifling. The durability of the dry-bottom boiler, again, exceeds that of the wet, and it is far easier to repair and renew the bottom when worn. The evaporative power is somewhat higher also, owing to the very small quantity of water below the level of the fire-bars. On the other hand, the dry-bottom boiler is more dangerous to the ship, as the heat from the ash plates is apt to produce serious corrosion in the floors and frames, and in the case of wooden ships, to produce even more serious consequences. It is, no doubt, for this latter reason that the wet-bottom boiler was preferred for ships of war. A strong objection to the wet-bottom boiler is raised in official quarters elsewhere, and that is the very great difficulty of examining the bottom or executing any repairs thereto; as this is often very true, and this kind of boiler in the mercantile marine is liable to corrosion in the bottom from its close proximity to bilge water, the Board of Trade require it to be lifted out for periodical examination. The Admiralty have always obviated the necessity for such a procedure by fitting the boilers into a bed of mastic cement; they have also carried out this practice with cylindrical boilers in small ships, where space does not admit of examination underneath.

The rectangular boiler was usually made with an internal smoke-box and uptake; this arrangement has the advantage of permitting a larger steam space, and of preventing heat from radiating so as to make the stoke-hole very hot; but it is an expensive one in first cost, as well as in wear and tear, for the plates forming the uptake being only exposed to steam wear very rapidly, especially near the water-line. To avoid such objections, rectangular boilers are often made with a *dry* smoke-box and uptake; that is, one which does not form an integral part of the boiler, but is built to it, and capable of removal.

The tubes of the box boiler are usually horizontal, or nearly so. To permit of room for man- and mud-holes between the furnace mouths and bottom of smoke-box, without unduly raising the tubes, they are set at an inclination, or with a rake, as it is generally called; the tubes in this case may be close to the furnace at the back end, and yet be well above it at the boiler front where man-holes are required; the water level is no higher than with horizontal tubes, as their front ends, when with the usual rake of 1 inch to the foot, are but a very little above the level of the top of the combustion chamber, and a boiler may be safely worked

with less water over those ends than over the combustion chamber tops.

Cochrane's Boiler.—Fig. 106 differs from the ordinary boiler, having a chamber extending from the combustion-chamber to the

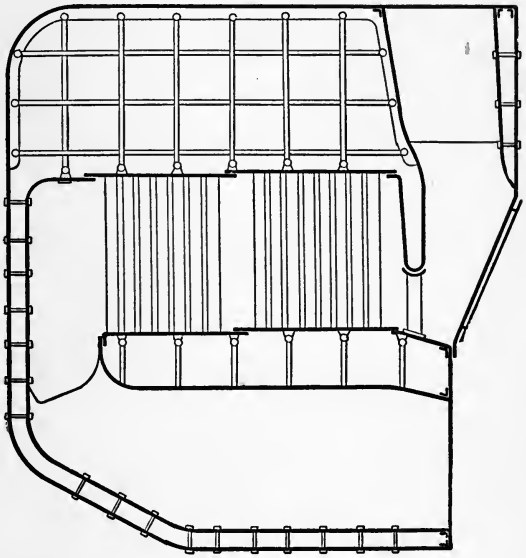

Fig. 106.—Cochrane's Boiler.

smoke-box, in which is a large number of small vertical tubes. This has been called for distinction a water-tube boiler, because in it the water is inside the tubes. It has been found by experiment to be more efficient *when clean* than the ordinary boiler, but its efficiency fell off as the tubes became dirty; and as it is most difficult to clean them externally as well as internally, its general efficiency is less than that of a well-designed boiler on the ordinary plan. A good test was given to this class of boiler by the Admiralty; H.M.S. "Vanguard" being fitted with one half of the whole number on this plan, and the other half of the ordinary design. It was found that when quite clean the former evaporated about 1 pound of water per pound of coal consumed more than did the latter, but after a few hours' work they were equal.

To avoid the excessive number of stays in the steam space necessitated by the increasing pressures to which boilers had to work previous to the general adoption of the cylindrical boiler, attempts were made to introduce the cylindrical form into the

general design of a box boiler; the top was made semi-cylindrical, and the bottom corners rounded away so as to do without vertical stays altogether when there was a dry bottom. This plan succeeded well enough when the pressure did not exceed 35 to 40 pounds, as the *water legs* between the furnaces possessed sufficient rigidity to resist distortion locally, and the seatings and chocks prevented structural change of form; but when boilers were made on this plan for a pressure of 60 pounds by some eminent Scotch engineers, complete failure was the result; the distortion of the bottom was so great that the seams leaked excessively, and constant caulking was required after working at only 45 pounds.

Cylindrical Boiler.—To avoid altogether the necessity for vertical stays as well as the transverse horizontal ones, the shell is of necessity a complete cylinder; and, although it was the demand for the higher pressures which became possible after the introduction of the surface condenser that brought the cylindrical boiler into general use, the form is often adopted now for pressures as low as 30 pounds. It is lighter, cheaper, and easier to make than the box boiler, and quite as durable when worked under similar conditions; on the other hand, it occupies more space, and has not so much steam space for the same amount of grate and heating surface as the box boiler. The oval boiler (fig. 107), however, which is a modified form, does not waste so much space as the cylindrical boiler proper, and, although somewhat more expensive than the latter, it is still far cheaper than the box boiler.

There are many varieties of cylindrical boilers in use, but they may be divided generally into three classes, viz. :—

(1.) *Single-ended*, or single fired boiler. (Figs. 108, 109.)
(2.) *Double-ended*, or double fired boilers. (Figs. 110, 111.)
(3.) *The gunboat type.* (Fig. 112.)

The single-ended boiler has furnaces and tubes only at one end, and is constructed up to as large as 17 feet diameter and 12 feet long. The chief difficulty in designing such large boilers on this plan, is to provide adequate grate area for the total heating surface which can be obtained. The number of furnaces cannot well exceed four, and is more generally three in large single-ended boilers.

Small boilers have usually two furnaces, and with this number are more efficient than with three even when of moderate size.

The number and size of the furnaces must, however, depend on the size of the boiler and the heating surface it is to contain. It is found in practice that large furnaces are more efficient as coal consumers than small ones, and the reason is not far to seek. The grate area with the same length of fire-bar increases as the diameter, while the section through which the air passes, both above and below the bars, increases as the square of the diameter; it is also possible to give a good inclination or rake to the bars with a large furnace, which very materially assists combustion. In practice the fire-bars are not of course always of the same length, but they do not increase in length as the furnace does in diameter, and con-

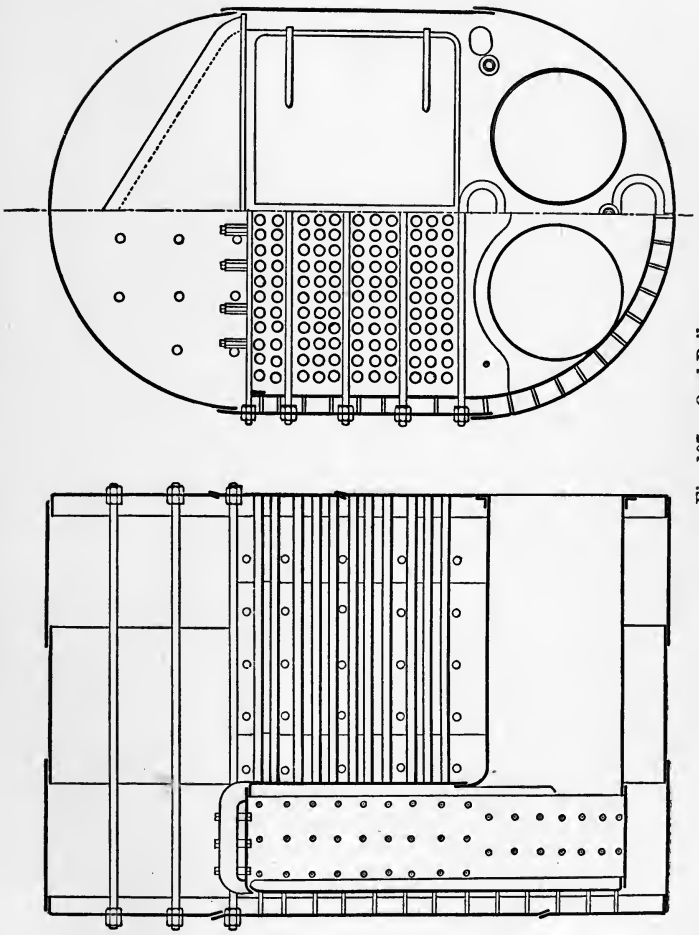

Fig. 107.—Oval Boiler.

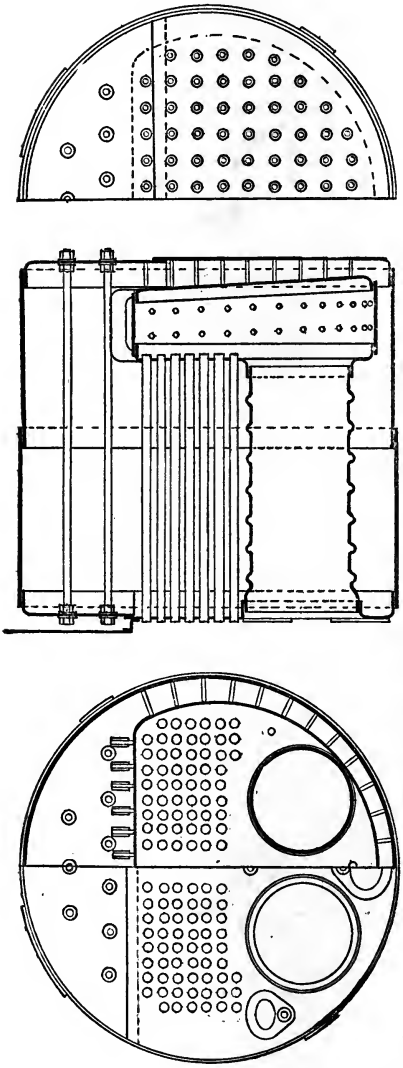

Fig. 108.—Single-ended Cylindrical Boiler (Purves' Furnaces).

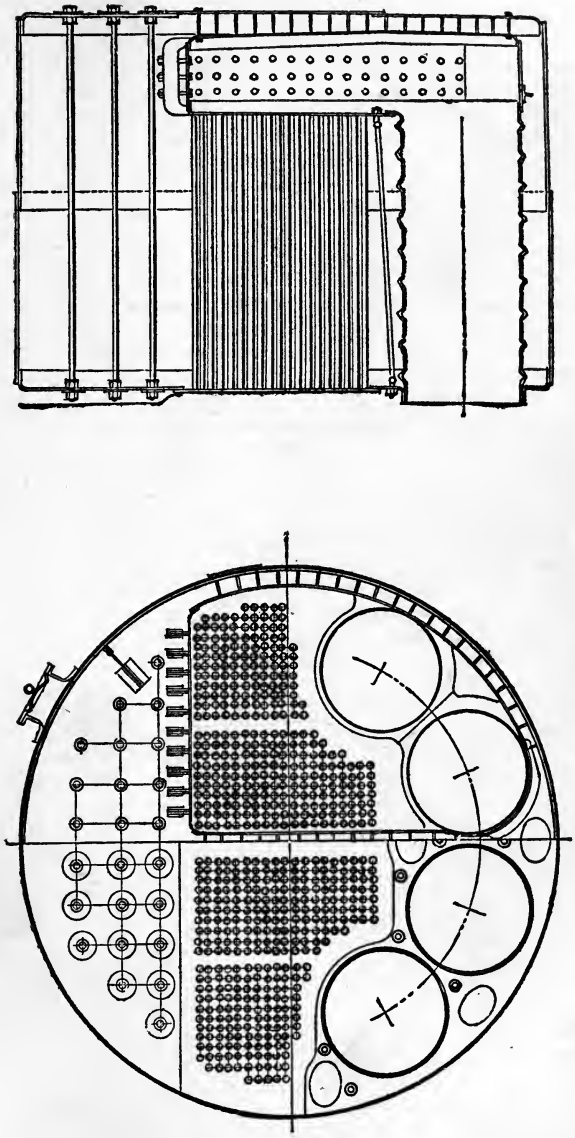

Fig. 109.—Four-Furnace Cylindrical Boiler.

sequently the air passages increase more rapidly than does the grate area when the diameter of furnace is increased. Furnaces should not be less than 36 inches, nor more than 48 inches in diameter, except under exceptional circumstances. Taking this as a rule for guidance, boilers may be made up to 9 feet diameter with one furnace, up to 13 feet 6 inches diameter with two furnaces, up to 15 feet with three furnaces, and beyond that diameter four furnaces are necessary to avoid too long length of grate.

A single furnace boiler has of course one combustion chamber, a two-furnace boiler may have one chamber common to the two furnaces, or a separate one to each. When there is only one boiler in the ship the latter plan is preferable, as then the bursting of a tube cannot wholly disable the boiler; when there are two or more boilers one chamber common to the two furnaces is preferable, as by stoking the fires alternately an even supply of steam is kept up and the smoke consumed. A three-furnace boiler has usually three separate combustion chambers, and the same remark applies to it as to the two-furnace boiler. The four-furnace boiler has generally only two combustion chambers, one wing and one middle furnace having a common chamber; but some engineers prefer three chambers, the two middle furnaces having one in common, and each wing furnace a separate one.

The chief objection to two large furnaces instead of three smaller, and to three larger ones instead of four smaller, is the longer grate required to get the requisite area, and to the large amount of dead water between the furnaces at the bottom. There is also to be considered the limit placed by the Board of Trade rules to avoid risk of collapsing by direct crushing of the metal, which often prevents the adoption of the larger furnace with the higher pressures.

It is unusual and certainly most difficult to use plates above 1¼ inch thick in the construction of a boiler shell, and it is this consideration which fixes the limit of diameter.* For this reason when a working pressure of 100 pounds and upwards was required, the large single-ended boiler made of iron could not be employed; indeed, 80 pounds was then taken as the limit of pressure for the very large diameter boiler.

The Double-ended Boiler (fig. 110) has furnaces at both ends with return tubes over them, and is generally tantamount to two single-ended boilers back to back, but with the backs removed. It is made up to 16 feet diameter and as much as 20 feet long; but such very large boilers are unusual, partly owing to the want of facilities for moving such great weight, and partly because the conditions under which such large boilers are possible are limited to very large steamers.

The double-ended boiler is lighter (*vide* Table XX.) and cheaper in proportion to the total heating surface than a single-ended boiler, and its evaporative efficiency in practice is generally higher. On the other hand, greater care is necessary in designing and in working it. That it is lighter is obvious, and that it is

* Boiler plates of steel are now made as much as 1½ in. thick, and 1⅝ is not at all uncommon.

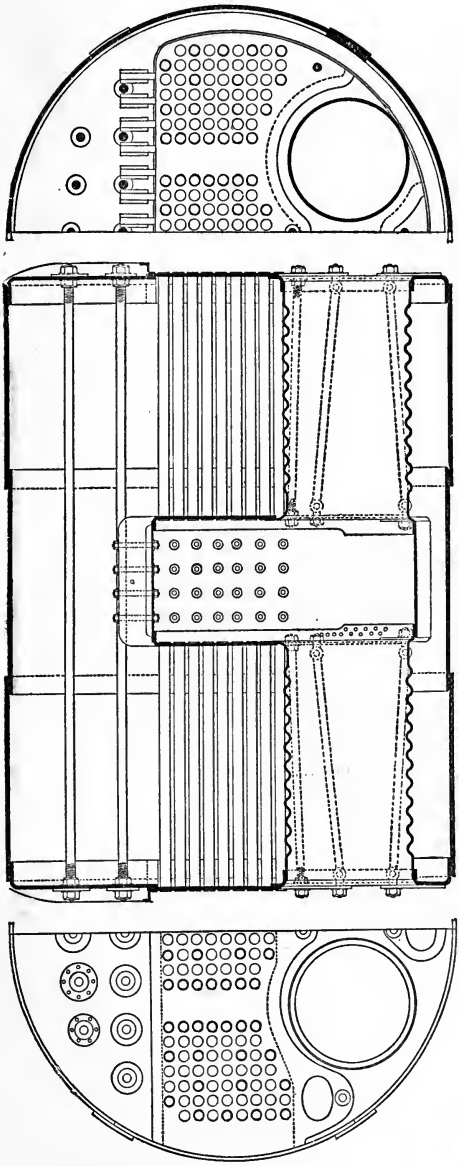

Fig. 110.—Double-ended Boiler with One Combustion Chamber.

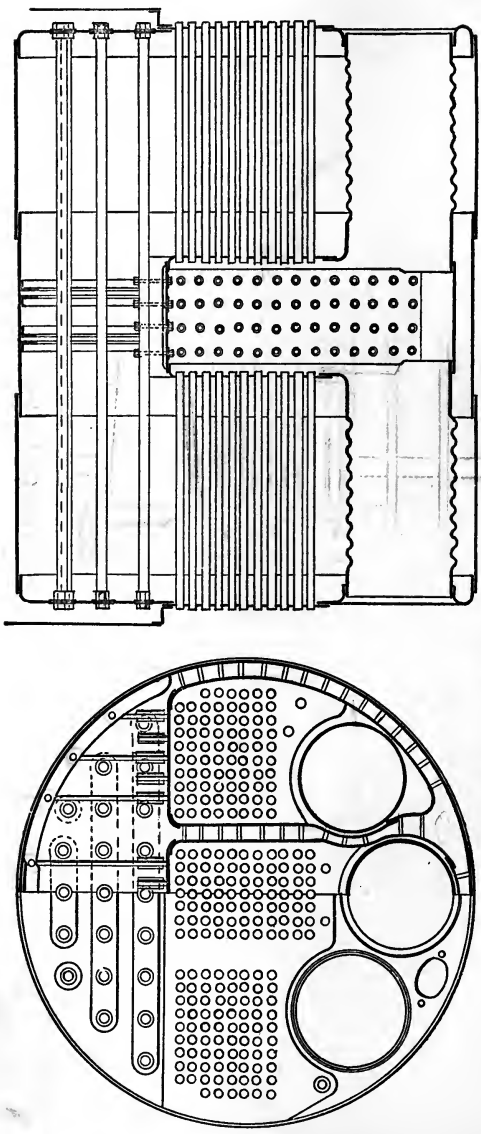

Fig. 111.—Double-ended Boiler (Fox's Furnaces).

cheaper may be inferred from the fact that there is less material, and less labour consequent on the reduced quantity of material.

The simplest form of this kind of boiler is one in which all the furnaces open into one common combustion chamber (fig. 110); this form, although at one time common enough, is now seldom adopted. The objections to it are, that the bursting of one tube will disable the whole, that the cleaning of one fire causes the efficiency to sink very low on account of the whole being affected by the inrush of cold air, and that unless special means be provided to promote proper circulation there is a strong tendency to *prime*.

The next simplest form is one in which opposite furnaces have a combustion chamber in common (fig. 111), that is, it differs from the first by having the combustion chamber divided longitudinally by water spaces. This avoids the chief objections raised against the first form while retaining its chief advantages, which are, simplicity of construction, by avoiding the flat back of the combustion chambers, with the necessary stays, &c., and the greatest heating surface within the smallest limits of length. It is often urged against this form of boiler that the tubes are very liable to leakage at their back ends, arising from the rush of cold air against the tube plate when the door of the furnace opposite it is open, causing it to buckle. It sometimes happens that the tubes in this kind of boiler do show a tendency to leak, but it is then generally due to the want of expansion on the part of the first row of stays above the combustion chamber when they are placed too close to the tubes. If these stays are at least 12 inches above the tubes so as not to hold the front tube plates too rigidly, then when steam is being got up the expansion of the tubes simply causes the plates to spring very slightly instead of to start their ends and cause them to leak. The leakage from springing of the tube plate from exposure to cold air can only take place when the combustion chamber is unduly short, and when there is an insufficient number of stays to the tube plates.

This particular form of boiler is very generally used; the evaporative results obtained from it are most satisfactory, and experience does not show it to be liable to more leakage than other boilers. Common care only is required in raising steam, and the opening of fire-doors to check evaporation is a reprehensible practice at all times and for all boilers. A brick semi-partition in the middle of the combustion chamber will prevent the cold air rushing on to the opposite tube plate, and it acts also as an equaliser of temperature in the combustion chamber at all times. If, however, the combustion chamber is too small, this will only magnify the defect by causing intense local heat, and thus tending to crack the plates.

Another common form of double-ended boiler has the furnaces at one end with one chamber common to them, and those at the other end with another chamber in common. The boiler is then longer than either of the other forms, and more expensive; the combustion

chambers have large flat backs, requiring a very large number of stays, which prevent their being properly cleaned from scale.

The last form, which is by far the most expensive and heaviest, but is now often adopted, is one in which each furnace has an independent combustion chamber. There is little need of description, as it is to all intents and purposes as two single boilers, except that the water and steam are common to the two parts.*

Oval Boilers are included under the generic term of cylindrical, as they partake of the principal features of that class. The transverse section is, however, not an ellipse, but is really formed by two semicircles with a rectangle intervening between them. The flat sides thus left between the semi-cylinders require staying, the first rows being at the commencement of the flat. There are both single- and double-ended oval boilers, which for pressures under 80 lbs. may be made both simply and economically to very large sizes, as the thickness of shell plate depends on the diameter of the cylindrical part. Two very large furnaces may be thus fitted into a cylindrical part of comparatively small diameter, sufficient heating surface being obtained by giving the requisite height. This form is most convenient when the boilers have to be stowed fore and aft, and the diameter is limited by the breadth of the ship between the stringers.

Holt's Boiler.—An ingenious form of double-ended boiler, used by Mr. Alfred Holt, consists of two oval end parts united by a cylindrical part whose axis passes through the upper focus of the oval; in the bottom of the end parts are the furnaces, which are each connected by a large tube to a combustion chamber in the middle of the cylindrical part, from which the tubes extend to the front above the furnaces, and are consequently much longer than usually found in a marine boiler.

Dry Combustion Chamber Boiler.—The boiler in this case is a simple cylindrical or oval shell, having the furnace extending from end to end, and the tubes over them likewise from end to end. The combustion chamber is external, and does not form an integral part of the boiler; but is built of brickwork so as to enclose one end, and form a connection between the furnaces and tubes. If two such boilers are placed back to back and some distance apart, and the space between them enclosed by brickwork, a double-ended arrangement is formed similar to the first described, except that the water and steam are not in common to the two parts, except by means of special connections. Such a boiler is very cheap to manufacture, as the wet combustion chamber with its flat sides and stays is avoided; the advantage of two boilers without their cost is obtained, and the evaporative efficiency is very high. The intense heat from the brickwork, however, is liable to crack the tube plates, unless care is taken; but if ample space is provided in the combustion chamber, there is not so much danger of this, or of damaging the tube ends.

Such boilers are now, however, not so much in use; among other

* The present naval practice is to have a separate chamber to each furnace in all boilers.

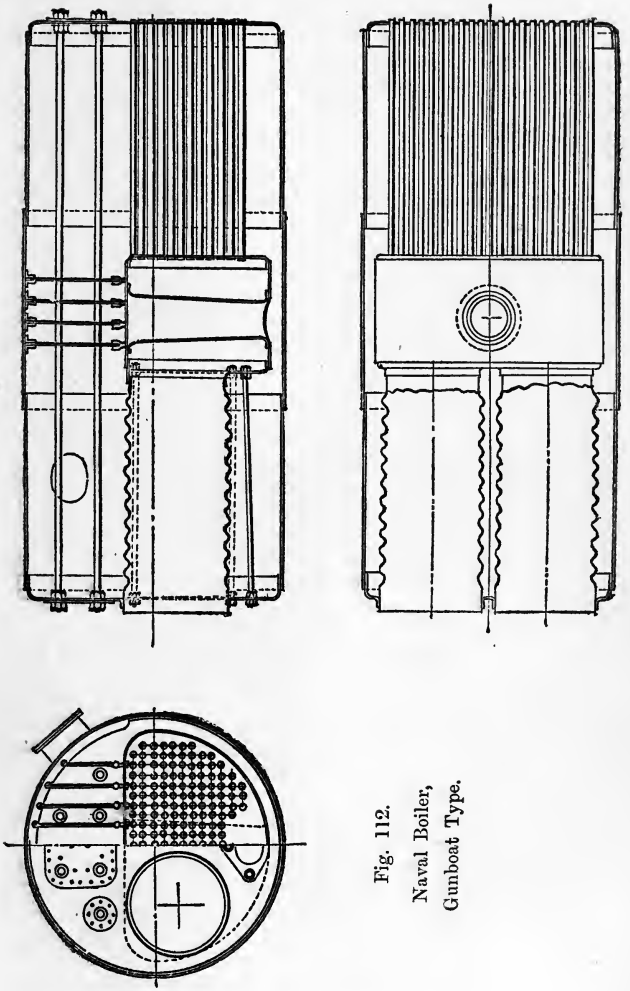

Fig. 112.
Naval Boiler,
Gunboat Type.

things accomplished was the perfect consumption of smoke, and a very even rate of evaporation. Their reputation, however, has been on some occasions somewhat damaged by a too intemperate advocacy, and by improper construction and design of the combustion chamber when attempting too much with them.

For pressures above 100 pounds in ships liable to rough usage, such boilers may be adopted with advantage on account of the absence of the internal combustion chamber.

Gunboat Boilers (fig. 112).—This type of boiler, first adopted by the Admiralty for gunboats, and afterwards chosen for corvettes, is one something between the locomotive and cylindrical boiler. The shell is cylindrical, and contains the furnaces at one end and the tubes at the other, the combustion chamber being in the middle between them; the top of the furnaces is therefore level with the top of the tubes, and no part of the heating surface is far removed from the water level. The flame and hot gases flow from the furnaces into the combustion chamber, are there sometimes slightly diverted and spread by means of a hanging bridge, and flow onward with only this slight interruption into and through the tubes to the smoke-box. It is not surprising, then, that this boiler burns its coal freely, and evaporates very quickly and efficiently. Two such boilers, having a total grate area of 45 square feet, and a total heating surface of only 1,206 square feet, supplied steam to compound engines developing over 500 I.H.P.* The coal consumed was about 30 lbs. per square foot of grate per hour; the weight of water evaporated by one pound of coal, at a somewhat reduced speed, was about 9½ pounds.

The chief objection to this class of boiler, which prevents its more general adoption in the mercantile marine, is the great length required; a stoke-hole is necessary at the back end to get at the tubes, and to admit of the smoke-box, &c.; and the total heating surface is also very small for the space occupied by it.

Vertical Cylindrical Boiler.—This kind of boiler, with many variations of internal arrangement, is used for auxiliary purposes, and then generally called the *donkey* boiler. On a large scale it is much used by Scotch engineers for river steamers, where rapid evaporation is of more importance than economy of fuel. It is light and inexpensive in proportion to the grate and heating surface, and occupies a small amount of floor space, capacity being obtained by the height. This type of boiler, as made by Cochran of Birkenhead and Blake of Manchester, has been very successful.

Locomotive Boiler.—This boiler has a fire-box of rectangular section, both horizontally and vertically, enclosed in a shell of somewhat similar shape, except that the top is often semi-cylindrical. The tubes are contained in a cylindrical barrel, extending horizontally from the fire-box shell, and at the end of this is the smoke-box. As the name implies, it is similar to the boiler of the ordinary locomotive.

This form of boiler is only employed in the steam launches of the mercantile marine, but it is now used in the Navy very extensively for torpedo boats as well as launches, and was even adopted on

* Two such boilers, having 68 square feet of grate and a total heating surface of 2,220 square feet, are now fitted in the new class of gun-vessels, whose triple expansion engines develop 900 I.H.P. with natural draught, and 1,250 I.H.P. with forced draught.

a large scale in torpedo gunboats, as well as in the high speed torpedo catchers and light gun-vessels. It is a very convenient form for the naval service, as it is the lightest kind of boiler for the heating surface contained; and as it is invariably used now with an artificial draught, the smallness of the grate area is no detriment to it. It is also especially well adapted for high pressures, as the flat surface can be stayed without affecting the accessibility, and the cylindrical barrel is of such small diameter, as to be made of very light plates for even very high pressures. Much difficulty is, however, found in keeping the tube ends tight, especially when the draught is forced much; and when pressed to their utmost capability with engines having large cylinders, they are very liable to prime excessively. The only part which presents any difficulty of construction is the furnace crown, which, being flat, requires an extensive amount of stays, &c., and as the evaporation is very rapid from it, there is great liability of a heavy scale being formed if sea water is used, which prevents the heat from passing to the water, and causes it to destroy the plates.

It has the disadvantages of the gunboat boiler, and on that account is not likely to be used in the merchant service.

Wet-Bottom Locomotive Boilers.—The success of the locomotive boiler for naval purposes caused the authorities to adopt them for a bigger class of ship, as well as for a large number of torpedo-boat catchers. A modification of the design, however, was made, which converted it into a wet-bottom boiler, the air being admitted beneath the bars through an aperture in the front, as in the furnaces of the ordinary boiler. The change, however, was a most unfortunate one, as without exception this form of locomotive boiler has proved troublesome and inefficient. The circulation is bad, so that the tube ends at the fire-box are so seriously affected as to cause considerable leaks and general trouble. The tubes are much nearer to the fire than in the ordinary locomotive boiler, and, consequently, become more readily choked; in fact, after some hours' steaming, owing to the formation of soot in the form of a bird nest at the end of each tube, the draught is so seriously impeded as to render the boiler practically useless.

The wet-bottom boiler, however, has certain advantages over the dry-bottom, and, when carefully designed, may be fairly satisfactory. The fire-bars must be lowered, at the back ends at least, so as to be in the same relative position as in the dry-bottom boiler. The fire-box itself should be divided into two independent parts by a longitudinal water-space, or there should be a row of vertical tubes connecting the top and bottom. By either method an increase of heating surface is made in the fire-box, and a better means of circulation provided, as also a good supply of water to the top of the fire-box ensured.

Double-ended Locomotive Boilers.—This form of boiler consists of a fire-box with a tube barrel at each end, which is to the ordinary locomotive boiler what the double-ended cylindrical boiler is to the single-ended. The firing holes are on either side, and in the case of a big boiler they will be two in number, so that through the four the grate can be well worked. Moreover, from their position and size, the opening of them does not so seriously affect the tube plates as with the ordinary locomotive boiler. This form of boiler is much lighter than the ordinary one and is convenient in many ways, especially for vessels of limited beam.

Seaton's Patent.—By making the tube barrel of the locomotive boiler a truncated cone instead of a cylinder, and arranging the tubes so that the top rows are nearly horizontal, a better means for circulation is provided by the wider spacing of the tubes at the fire-box and the declination of the boiler barrel at the bottom, while, by the inclination of the tubes upwards, a better draught is ensured.

Dimensions of a Boiler.—The amount of grate area is the consideration which chiefly affects the choice of dimensions of boiler, and to a very large extent the number and form of the boilers also are governed by it. The rectangular boiler could be made of any breadth without in anyway affecting its length or height, so that the number of furnaces could be settled arbitrarily, and any addition to the number only meant some additional breadth. In small ships with the boiler athwartships and *fore and aft* stoking, the breadth of the ship does place a limit to the breadth of boiler, even when rectangular, but it seldom operates so as to seriously interfere with the boiler arrangement. The cylindrical boiler is not so elastic in the hands of the designer; to increase the number of furnaces in it the diameter must be increased, which means that both breadth and height are affected. If two furnaces of 40 inches diameter be the limit for a boiler 10 feet in diameter, that there may be adequate heating surface, and 14 feet is the suitable diameter for three furnaces of 40 inches diameter, the grate bars being of the same length in both cases, the increase in boiler capacity is 96 per cent. for an increase of 50 per cent. of grate. The *smallest* diameter of shell into which three 40-inch furnaces can be fitted so as to give adequate heating surface, is 13 feet 6 inches, which is an increase in capacity of 82 per cent. over the boiler 10 feet in diameter. Four 40-inch furnaces require a shell of at least 16 feet diameter, which means an increase of 156 per cent. to obtain 100 per cent. increase of grate. To arrange four 40-inch furnaces so as to be convenient for stoking, a shell of 17 feet diameter is required, which means an increase of 189 per cent. over the shell of 10 feet diameter; if, instead of increasing the number of furnaces by increasing the diameter of shell, the number of shells be increased, the space occupied is considerably in excess of the direct ratio of grate areas.

It is true that to some extent increase of grate area may be obtained by increasing the length of furnace, but the *efficiency* of a grate in practice is nearly inversely as its length; for a long grate cannot be nearly so well attended to as a short one, nor is the air supply either under or over the bars so good with a long furnace, since the area of section at the mouth, with the same diameter of furnace, is the same whether the bars be short or long. It is no doubt for this reason that Mr. Macfarlane Gray's rule, *that the consumption of coal is very nearly proportional to the diameter of furnace*, is found to be so correct in every-day practice.

Area of Fire Grate.—The area of fire grate required for the evaporation of a certain weight of steam depends on the quantity and quality of the fuel burned on it; the quantity of coal is generally dependent to a large extent on the quality, as may be seen by reference to Table XVII, Chapter XVII. It may be assumed that one pound of good steam coal will evaporate 10 pounds of water in the ordinary marine boiler, 7 pounds in a locomotive boiler, as fitted to torpedo boats, when not being forced, and 6

pounds when forced to the utmost; also that in the mercantile marine, where the coal is only of average quality, 8 to 9 pounds is a fair result, and 6 to 8 pounds only can be obtained with the coal supplied in some foreign ports. The quantity of coal burnt on a square foot of grate per hour with natural draught is about 20 pounds, under favourable circumstances; with good stoking and very good draught as much as 25 pounds may be consumed; but under ordinary circumstances only 15 pounds should be supplied to obtain complete combustion and economical results.

From this it will be seen, (1.) that the greatest weight of steam evaporated per square foot of grate per hour, under the most favourable circumstances, is 10 × 25, or 250 pounds; (2.) that with bad fuel and economical stoking it may be only 6 × 15, or 90 pounds; (3.) that with fairly good fuel and favourable circumstances it may be 9 × 20, or 180 pounds, and (4.) that with fairly good coal and careful stoking about 150 pounds may be expected. In practice, therefore, for trial trips with Welsh coal and picked stokers, calculations may be based on an evaporation of 250 pounds; for mail steamships using good English coal, calculations should be based on an evaporation of 150 pounds; and if a ship is going to trade in the East or localities where inferior coal is to be used, the boilers should be designed on the assumption of an evaporation of only 100 pounds of water per square foot of grate.

If the weight of steam required per hour for a given engine be calculated, and divided by one of these numbers, the result will be the number of square feet required.

If the draught be increased by artificial means, the quantity of fuel consumed per square foot of grate may be as high as 100 pounds per hour, with an air pressure of 6 inches in the stokehole; and 50 pounds with only 2 inches, the corresponding evaporations being 570 pounds and 350 pounds per square foot of grate.

Consumption of Fuel.—The consumption of fuel per I.H.P. per hour for engines working at full power is 4 pounds, with surface-condensing expansive engines, using steam of 30 pounds pressure above the atmosphere; 3¼ to 3½ pounds with similar engines of best make and large size; 2¾ pounds with compound naval engines when forced, and 2¼ to 2½ pounds when of moderate size and working at two-third power; 2¼ pounds with compound engines of moderate size and as generally fitted in the mercantile marine when working at full speed; 2 pounds with mercantile compound engines well designed and carefully worked at sea full speed; 1¾ pounds with large compound engines as fitted in modern mail steamers when working at sea full speed under favourable circumstances; 1½ pounds with good triple expansion engines using English and Welsh coal of good quality, and 1¾ pounds when ordinary steam coal is used; 1¼ to 1½ pounds with quadruple expansion engines using steam at 200 to 180 pounds pressure; the consumption of water with these engines being about 12½ pounds; the consumption in torpedo boats with compound engines is 3½ to 4 pounds when working nearly full speed.

Assuming the consumption of coal to be 1½ pounds per I.H.P per hour, and the grate to burn 15 pounds per square foot, there should

be 0·1 square foot of grate per I.H.P. If the sea full speed I.H.P. of a merchant ship be multiplied by 0·1, the result is the grate area required for that power.

On trial trips with good coal and good stoking, and the engines working at full speed, the triple compound engine will develop 14 I.H.P. per square foot of grate; hence, one-fourteenth of a square foot per I.H.P. may be taken as the proper allowance in designing furnaces for engines to develop a certain power on a trial trip or other favourable occasion.

As the sea full speed power is usually, on long voyages, about three-fourths that developed on a trial trip, the proportion of $\frac{4}{3} \times \frac{1}{14}$ or 0·095 of a square foot per I.H.P. developed at sea,* corresponds with that given above.

Heating Surface.—Strictly speaking, all surfaces exposed to heat which are capable of absorbing, and their bodies of transmitting, that heat to the water or steam are heating surfaces; but technically only certain parts are reckoned as *effective* heating surface, and the aggregate of such surfaces is called the *total heating surface.* The surface of the upper half of the furnace, or the part above the level of the fire-bars, that of the combustion chamber above the level of the bridges, and back plates, including the actual surface of the back-tube plates, are reckoned as the effective heating surface of furnaces and chambers, and are stated separately, chiefly on account of the metal forming them being three to four times the thickness of the tubes. The surface of the tubes measured externally—that is, the area obtained by multiplying the external circumference by the length *between* the tube plates, is called the *tube surface.*

The Admiralty reckon tube surface by taking the area obtained by multiplying the external circumference by the length *over* the tube plates; and in reckoning the total heating surface, the surface of the back tube plates is omitted. The calculation is in this way simplified, and the *total heating surface* is practically the same as if calculated strictly, for the surface of the parts of the tubes covered by the plates is very nearly the same as that of the back tube plates.

The *front* tube plates should be, and usually are, omitted in calculating the total heating surface, as they cannot be considered as effective.

The *amount* of total heating surface must depend on the quantity and quality of the fuel burnt on the grates in a fixed time, and also on the quality of the surface, &c. But since a grate may at some time have to burn the best of fuel, the total heating surface should be adequate for such an occasion.

Tube Surface.—When possible, there should be 1·0 square foot of brass tube, and 1·33 square foot of iron tube for each pound of coal burnt per hour; that is, in the ordinary marine boiler there should be about 20 square feet of brass tubes, and about 27 square feet of iron tubes per square foot of grate.

Since on trial trip with compound engines 10 I.H.P. are usually developed per square foot of grate, there should be 2 square feet of

* With good triple-expansion engines 0·08 of a square foot per I.H.P. is sufficient.

brass, and 2·7 square feet of iron tubes per I.H.P. developed on trial trip, or 2·66 and 3·6 square feet respectively per I.H.P. developed at sea. And since with triple expansion engines as much as 14 I.H.P. are developed from a square foot of grate, there need only be 1·93 square feet of iron tube surface per I.H.P. in the boilers for them. When weight of boiler is of as much consideration as economy of fuel 1·5 square feet of tube surface per I.H.P. is sufficient with triple expansion engines.

Total Heating Surface.—The ratio of tube surface to the total heating surface is about 0·8 in the single-ended, and from 0·83 to 0·88 in the double-ended cylindrical boilers; taking the average at 0·84, the following will be the allowance of total heating surface based on the above consideration:—

TABLE XVIII.

Fair Trial Trip Results.	Admiralty Nat. Drft.	Mercantile Practice.
Total heating surface per pound of coal per hour, . .	1·3	1·6
,, ,, ,, square foot of grate, . .	27 to 30	30 to 35
,, ,, ,, I.H.P., good compound, .	2·78	3·5
,, ,, ,, ,, ,, triple compound,	2·16	2·3
,, ,, ,, ,, ,, quadruple ,, .	...	2·2
,, ,, ,, triple, locomotive boilers, .	1·70 F.D.	...
,, ,, ,, ,, ordinary ,, .	1·65 F.D.	1·85 F.D.

The total heating surface in the locomotive boiler of torpedo boats should be based on considerations similar to the foregoing; but as weight of machinery is of more consequence than economy of fuel, and as economy of fuel can be effected by working at reduced speeds, such as would be necessary from other considerations when making long runs, the heating surface is not generally so large as would be thus given. For example, a torpedo boat burns nearly 100 lbs. of coal per square foot of grate per hour when running at full speed with a *plenum* of 6 inches; by the rule given for ordinary boilers, there should be 119 square feet of heating surface per square foot of grate; in practice there are only 34 square feet. When the *plenum* is only 2 inches, about 50 lbs. of coal are consumed per square foot of grate, and although the above allowance of heating surface is small for this quantity of coal burnt, it is more in accordance with what is necessary for economical evaporation, and experiments have shown that the evaporative efficiency is then nearly 20 per cent. higher than at full speed. The locomotive boiler under these circumstances is a rapid generator of steam, if not an economical one; for, with a *plenum* of 6 inches, 18 pounds of water are evaporated per square foot of heating surface, and nearly 11 pounds with the 2 inches. The modern locomotive boiler on railways has usually from 60 to 90 square feet of heating surface per square foot of grate, and the

consumption of coal is about 65 pounds per square foot per hour; as much as 130 pounds of coke have been consumed on each square foot, each pound of coke evaporating 10·5 pounds of water, which is about the same quantity evaporated per pound of coal in a somewhat similar boiler. When possible, therefore, the boiler of yachts and launches, which are required to traverse considerable distances without coaling, should be designed in accordance with locomotive practice, rather than with that of torpedo boat builders.

The usual allowance in torpedo boat's boilers is about 1·5 square feet of total heating surface per I.H.P. developed. on trial trip; and 23 I.H.P. are developed per square foot of grate.

The following rule gives approximately the amount of total heating surface which a cylindrical boiler may have:—

$$\text{Total heating surface} = (\text{diameter of shell in feet})^2 \times (\text{length of tubes in feet} + 3).$$

Example.—What amount of heating surface can a boiler 12 feet diameter contain, the tubes being 7 feet long?

Total heating surface $= 12^2 \times (7 + 3)$, or 1440 square feet.

Example.—What heating surface should a double-ended boiler contain whose diameter is 10 feet, and the length of tubes 5·5 feet, the combustion chambers being common to opposite furnaces?

Here total heating surface $= 10^2 \times (2 \times 5{\cdot}5 + 3)$, or 1400 square feet.

If the combustion chambers are the same as in a single-ended boiler, the quantity will be the same as in *two* single-ended boilers of the same diameter and length of tubes.

Area through Tubes.—The sectional area through the tubes, or that area through which the hot gases and smoke pass from the combustion chamber to the funnel, should not be less than one-seventh the area of grate with the natural draught, and is usually about one-fifth. Too large an area produces a slow velocity, which permits a deposit of soot and ash to form, with the consequent reduction of evaporative efficiency. Too small an area checks the draught, especially when the surfaces have become dirty.

Capacity of Boiler Shell.—To contain the requisite heating surface, and to leave sufficient steam space, the boiler shell should contain 3 cubic feet per I.H.P. for the mercantile marine, and 2·5 cubic feet for the Navy, when made for compound screw engines, and 2 and 1·6 respectively for triple engines; when for paddle engines it should be somewhat larger. In the mercantile marine a slightly larger allowance is sometimes made, especially when for mail steamers making long voyages. Since the *volume* of steam produced at a pressure of 150 lbs. is only about half that at 70 lbs. when the same weight is used, the steam space for boilers working at the high-pressures now obtaining may be considerably less than was usual. Good results can be got now with an allowance of $1\frac{3}{4}$ to 2 cubic feet of boiler per I.H.P. for natural draught, and $1\frac{1}{4}$ to $1\frac{1}{2}$ for forced draught.

Steam Space.—The top row of tubes in a cylindrical boiler should

be not less than 0·28 of the diameter of the shell from the top. The tubes are sometimes placed higher, but there is then risk of priming from contraction of water-surface area as well as from the conformation of the sides. Priming is often due rather to contracted area of water-surface than to small steam space, although the latter is generally set down as the cause when the tubes are high. If the water surface is so contracted that little or no part of the boiler where there may be down currents lies immediately under it, priming is sure to ensue.

The capacity of the steam space depends on the quantity of steam used in a fixed time, and on the number of periods of supply to the engines in that time. The effect of opening to the cylinders is to reduce the pressure in the steam space, and if that reduction in pressure be sensible there will be an augmentation of ebullition at that period. If the reduction in pressure is serious there will be excessive ebullition, resulting in *priming*. For this reason a slow-moving paddle engine, which takes its steam in a series of gulps, requires to have boilers with much larger steam space than is necessary for fast-running screw engines using the same weight of steam.

There should be 0·8 of a cubic foot of steam space per I.H.P. for a slow-running paddle engine, and 0·65 of a cubic foot per I.H.P. for mercantile screw engines, and as low as 0·55 of a cubic foot for fast-running mercantile and naval screw engines. Boilers for triple and quadruple expansion engines may have 20 per cent. less steam space than this with natural draught, and 50 per cent. less with forced draught. The amount of steam space in a boiler is not dependent on the *weight* of steam used per stroke, but on the *volume*, and for that reason a boiler constructed for, say, 100 lbs. pressure does not require so much steam space as a similar boiler constructed for only 60 lbs. pressure; for if both boilers have the same grate area and heating surface, they will evaporate the same *weight* of steam, but the volumes will be as 2 to 3 nearly. If these two boilers supply steam at the same rate to engines running at the same number of revolutions, their steam spaces may be as 2 to 3 nearly.

It is no doubt on account of the high pressure and large number of revolutions of engines that a locomotive boiler works so well without priming, for otherwise the small steam space and contracted water surface would tend to produce excessive priming.

Area of Uptake and Funnel Sections.—Although in practice the funnel is often designed to suit the general appearance of the ship, and it is also found that, whereas some engineers prefer a small high funnel, there are others who, for good reasons, resort to the practice of making the funnel short and of large diameter; still there is undoubtedly a certain diameter and a certain height that will give the best result, and that cannot be determined from external considerations.*

In the Navy with natural draught the funnel is usually made

* Consult *Index* for other information.

TABLE XIX.—Particulars of some Marine Boilers as actually made in accordance with the Old Rules of the Board of Trade and Lloyds.

	Rules on which Constructed.	Shell.				Working Pressure.	Furnaces.			Number of Combustion Chambers.	Tubes.				Total Heating Surface.	Weight of			Weight per 100 feet Total Heating Surface.		
		Material.	Diameter.	Length.	Thickness.		No.	Diameter.	Thickness.		Number.	Diameter.	Length.	Surface.		Boiler.	Water.	Total.	Boiler.	Water.	Total.
			Ft. In.	Ft. In.	In.	Lbs.		In.	In.			In.	Ft. In.	Sq. Ft.	Sq. Ft.	Tons.	Tons.	Tons.	Tons.	Tons.	Tons.
A	Board of Trade, . . .	Steel	16 0	11 0	$\frac{7}{16}$	80	3	48	$\frac{17}{32}$	3	250	$3\frac{1}{4}$	6 6	1360	1800	32·75	22·75	55·5	1·83	1·25	3·08
B	Lloyd's, ...	Steel	15 6	11 0	$\frac{15}{32}$	85	4	36	$\frac{17}{32}$	2	274	$3\frac{1}{2}$	7 6	1858	2250	33·65	23·6	58·25	1·50	1·05	2·55
C	Lloyd's and Board of Trade,	Iron	14 9	11 0	$1\frac{1}{16}$	80	3	39	$\frac{17}{32}$	3	258	$3\frac{1}{4}$	7 0	1630	2010	33·4	21·7	55·1	1·66	1·08	2·74
D	Lloyd's and Board of Trade,	Iron	14 6	10 6	$1\frac{1}{32}$	80	3	40	$\frac{1}{2}$	3	280	$3\frac{1}{2}$	7 3	1830	2175	33·05	20·0	53·05	1·52	0·92	2·44
E	Lloyd's, ...	Steel	14 3	10 3	$\frac{15}{32}$	80	3	42	$\frac{1}{2}$	3	198	$3\frac{1}{2}$	7 0	1251	1570	25·2	18·8	44·0	1·60	1·20	2·80
F	Board of Trade, . . .	Steel	14 9	16 6	$\frac{7}{16}$	80	6	42	$\frac{17}{32}$	3	392	$3\frac{1}{4}$	6 2	2021	2500	40·2	28·25	68·45	1·61	1·13	2·74
G	Lloyd's and Board of Trade,	Steel	13 9	19 0	$\frac{13}{16}$	80	4	48	$\frac{1}{2}$	4	388	$3\frac{1}{2}$	6 10	2388	2885	40·5	32·5	73·0	1·40	1·13	2·53
H	Lloyd's and Board of Trade,	Iron	13 6	15 0	1	70	4	45	$\frac{1}{2}$	2	476	$3\frac{1}{4}$	5 9	2286	2610	37·5	26·6	64·1	1·44	1·02	2·46
J	Board of Trade, . . .	Steel	13 9	15 0	$\frac{7}{8}$	90	4	45	$\frac{17}{32}$	2	420	$3\frac{1}{4}$	5 $7\frac{1}{2}$	1968	2310	34·7	26·0	60·7	1·50	1·12	2·62
K	Board of Trade, . . .	Steel	12 9	15 0	1	110	4	42	$\frac{1}{2}$	2	380	$3\frac{1}{2}$	5 10	1860	2270	35·7	23·3	59·0	1·57	1·03	2·60
L	Board of Trade, . . .	Iron	13 0	9 3	1	80	2	42	$\frac{17}{32}$	2	216	$3\frac{1}{4}$	6 1	1098	1331	22·1	14·0	36·1	1·66	1·05	2·71
M	Lloyd's, ...	Steel	12 0	9 6	$2\frac{1}{32}$	80	2	41	$\frac{1}{2}$	2	172	$3\frac{1}{2}$	6 4	980	1205	20·6	12·6	33·2	1·66	1·00	2·66
N	Lloyd's and Board of Trade,	Iron	10 6	9 0	$\frac{17}{32}$	90	2	36	$\frac{17}{32}$	1	130	$3\frac{1}{4}$	6 $4\frac{1}{2}$	687	835	15·75	9·7	25·45	1·88	1·17	3·05
O	Lloyd's, ...	Iron	9 6	8 6	$\frac{9}{16}$	75	2	33	$\frac{7}{16}$	1	108	3	6 0	500	630	10·65	7·75	18·4	1·69	1·23	2·92
P	Board of Trade, . . .	Steel	8 0	8 6	$\frac{9}{16}$	90	1	42	$\frac{17}{32}$	1	80	$2\frac{3}{4}$	5 9	324	420	8·00	5·8	13·8	1·90	1·36	3·26
Q	Board of Trade, . . .	Steel	8 6	6 0	$\frac{9}{16}$	80	2	33	$\frac{7}{16}$	1	64	$2\frac{1}{2}$	4 0	163	250	6·25	4·7	10·95	2·50	1·88	4·38

[*To face p. 384.*

384

MADE (Under Old Rules).

	TUBES.			Total Heating Surface.	WEIGHT OF			WEIGHT PER 100 FT. OF TOTAL HEATING SURFACE.		
	Length.		Surface.		Boiler.	Water.	Total.	Boiler.	Water.	Total.
	Ft.	Ins.	Sq. Ft.	Sq. Ft.	Tons.	Tons.	Tons.	Tons.	Tons.	Tons.
Admi	6	9	3335	3960	49·77	30·45	80·22	1·26	·77	2·03
,,	6	4½	3288	3868	47·6	29·62	77·22	1·23	·76	1·99
Lloyd	6	3	3074	3620	57·75	30·6	88·35	1·60	·84	2·44
	6	4½	2490	3000	45·0	26·0	71·0	1·50	·86	2·36
	6	3	2417	2810	42	24·75	66·75	1·49	·88	2·37
	5	5½	1775	2260	38	28·2	66·2	1·68	1·24	2·92
Board	6	0	1740	2100	31·4	20·3	51·7	1·50	1·00	2·50
Lloyd	7	0	1310	1685	34·3	21·2	55·5	2·03	1·30	3·33
Lloyd	6	7	2033	2380	39·7	22·55	62·25	1·67	·94	2·61
	6	3	1537	1910	35·0	17·5	52·5	1·83	·91	2·74
Board	7	3	1340	1730	31·2	20·2	51·4	1·8	1·16	2·96
Board	7	0	1024	1360	30·4	16·5	46·9	2·24	1·21	3·45
	6	1½	1000	1240	23·1	13·04	36·14	1·86	1·05	2·91
	6	6	830	1085	23·25	12·2	35·45	2·14	1·12	3·26
Lloyd	6	6	913	1145	20·0	10·7	30·7	1·74	·93	2·68
Board	6	3	614	810	16·2	10·0	26·2	2·0	1·23	3·23
Lloyd	6	0	500	655	12·6	6·5	18·6	1·92	1·00	2·95
Boar	5	11	473	600	11·5	6·68	18·18	1·93	1·11	3·04

TABLE XIX. (*Continued*).—PARTICULARS OF SOME MARINE BOILERS AS ACTUALLY MADE OF SIEMENS' STEEL IN ACCORDANCE WITH THE RULES OF THE BOARD OF TRADE AND LLOYDS IN FORCE IN 1890.

	Rules on which Constructed.	Shell.			Working Pressure.	Furnaces.			Number of Combustion Chambers.	Tubes.				Total Heating Surface.	Weight of			Weight per 100 feet Total Heating Surface.		
		Diameter.	Length.	Thickness.		No.	Diameter.	Thickness.		Number.	Diameter.	Length.	Surface.		Boiler.	Water.	Total.	Boiler.	Water.	Total.
		Ft. In.	Ft. In.	In.	Lbs.		In.	In.			In.	Ft. In.	Sq. Ft.	Sq. Ft.	Tons.	Tons.	Tons.	Tons.	Tons.	Tons.
A A	Board of Trade, . . .	14 9	16 6	$1\frac{11}{32}$	160	6	42	$\frac{9}{16}$	1	556	$3\frac{1}{2}$	6 6	3260	3750	58·2	32·0	90·2	1·55	·85	2·4
B B	Lloyd's and Board of Trade,	14 0	17 0	$1\frac{1}{4}$	160	6	40	$\frac{35}{64}$	3	466	$3\frac{1}{2}$	6 9	2840	3375	57·1	30·0	87·1	1·69	·88	2·57
C C	Lloyd's and Board of Trade,	13 6	16 5	$1\frac{7}{32}$	165	6	40	$\frac{9}{16}$	3	436	$3\frac{1}{2}$	6 4	2350	3000	51·0	26·0	77·0	1·70	·86	2·56
D D	Lloyd's and Board of Trade,	13 0	16 0	$1\frac{9}{16}$	165	4	45	$\frac{19}{32}$	2	464	$3\frac{1}{4}$	6 3	2417	2810	46·7	28·6	75·3	1·66	1·02	2·68
E E	Lloyd's and Board of Trade,	11 9	15 6	$1\frac{9}{32}$	160	4	39	$\frac{19}{32}$	2	344	$3\frac{1}{4}$	6 $1\frac{1}{2}$	1755	2040	32·0	21·0	53·0	1·56	1·03	2·6
F F	Lloyd's and Board of Trade,	14 6	10 6	$1\frac{1}{16}$	160	3	42	$\frac{5}{8}$	3	232	$3\frac{1}{4}$	8 0	1820	2250	40·0	23·0	63·0	1·77	1·02	2·80
G G	Lloyd's and Board of Trade,	14 0	10 6	$1\frac{9}{32}$	155	3	42	$\frac{9}{16}$	3	226	$3\frac{1}{2}$	7 $3\frac{1}{2}$	1484	1870	37·2	19·5	56·7	1·99	1·04	3·03
H H	Lloyd's and Board of Trade,	13 0	11 0	$1\frac{9}{32}$	150	2	48	$\frac{19}{32}$	2	176	$3\frac{3}{4}$	7 6	1270	1590	31·3	17·2	48·5	1·96	1·09	2·05
J J	Lloyd's and Board of Trade,	13 0	10 0	$1\frac{9}{32}$	150	3	38	$\frac{31}{64}$	3	166	$3\frac{1}{2}$	7 0	1035	1345	27·5	15·8	43·3	2·04	1·17	3·21
K K	Lloyd's and Board of Trade,	12 9	11 0	$1\frac{1}{8}$	160	3	40	$\frac{17}{32}$	3	170	$3\frac{1}{2}$	7 $10\frac{1}{2}$	1220	1625	30·0	16·0	46·0	1·85	·98	2·83
L L	Board of Trade, . . .	12 3	10 6	$1\frac{9}{32}$	160	2	42	$\frac{17}{32}$	1	180	$3\frac{1}{2}$	7 $4\frac{1}{2}$	1195	1480	24·5	15·0	39·5	1·65	1·01	2·66
M M	Board of Trade, . . .	12 3	9 6	$1\frac{3}{8}$	200	2	42	$\frac{21}{32}$	1	192	$3\frac{1}{4}$	6 6	1045	1300	27·0	13·0	40·0	2·07	1·00	3·07
N N	Board of Trade, . . .	11 9	11 0	1	150	2	46	$\frac{17}{32}$	1	128	$3\frac{3}{4}$	8 0	990	1250	22·6	14·0	36·6	1·80	1·12	2·92
O O	Lloyd's, ...	10 6	9 3	$\frac{7}{8}$	150	2	37	$\frac{5}{16}$	1	110	$3\frac{1}{2}$	6 0	642	800	16·2	9·0	25·2	2·02	1·12	3·15
P P	Lloyd's, ...	9 3	9 $1\frac{1}{2}$	$\frac{13}{16}$	155	2	31	$\frac{19}{32}$	1	104	$3\frac{1}{4}$	6 3	541	692	13·2	8·0	21·2	1·90	1·15	3·05
Q Q	Lloyd's, ...	9 0	8 0	$\frac{25}{32}$	140	2	31	$\frac{17}{32}$	1	104	$3\frac{1}{4}$	5 5	468	600	12·1	6·5	18·6	2·01	1·08	3·1

TABLE XX.—Comparison of the Different Types of Marine Boilers, constructed in accordance with the Board of Trade Old Rules for a Working Pressure of 80 lbs. per Square Inch.

General Description.	Number of Boilers.	Shell.		Furnaces.			Tubes.				Total Heating Surface.	Total Capacity.	Weight.		
		Diam.	Length.	No.	Diam.	Length.	No.	Diam.	Length.	Surface.			Boiler.	Water.	Total.
		Ft. Ins.	Ft. Ins.		Ins.	Ft. Ins.		Ins.	Ft. Ins.	Sq. feet.	Sq. feet.	Cub. feet.	Tons.	Tons.	Tons.
Double-ended boiler, having two combustion chambers, each common to *opposite* furnaces, ...	1	12 0	14 0	4	39	5 6	376	3¼	5 6	1725	2000	1582	26·9 iron 23·75 steel	20	46·9 43·75
Double-ended boiler, having two combustion chambers, each common to furnaces at *same* end, ...	1	12 0	14 0	4	39	5 3	376	3¼	5 3	1643	2000	1582	27·15 iron 24·0 steel	20	47·15 44·0
Double-ended boiler, having four combustion chambers, one to each furnace, ...	1	12 0	14 0	4	39	5 3	376	3¼	5 3	1643	2000	1582	27·4 iron 24·2 steel	20·6	48·0 44·8
Single-ended boiler, having three combustion chambers, one to each furnace, ...	1	14 6	9 7	3	42	6 9	274	3½	6 9	1665	2000	1582	29·75 iron 26·15 steel	20	49·75 46·15
Two single-ended boilers, each having two combustion chambers, one to each furnace, ...	2	11 0	8 4	4	38	5 10	316	3½	5 10	1650	2000	1582	33·7 iron 30·6 steel	20	53·7 50·6

TABLE XX. (*Continued*).—Comparison of the Different Types of Marine Boilers, made of Siemens' Steel, and constructed in accordance with the Board of Trade Rules in force in 1890 for a Working Pressure of 160 lbs. per Square Inch.

General Description.	Number of Boilers.	Shell.				Furnaces.				Tubes.					Total Heating Surface.	Total Capacity.	Weight.		
		Diam.		Length.		No.	Diam.	Length.		No.	Diam.	Length.		Surface.			Boiler.	Water.	Total.
		Ft.	Ins.	Ft.	Ins.		Ins.	Ft.	Ins.		Ins.	Ft.	Ins.	Sq. feet.	Sq. feet.	Cub. feet.	Tons.	Tons.	Tons.
Double-ended boiler, having two combustion chambers, each common to *opposite* furnaces, ...	1	12	0	14	0	4	41	5	6	376	3¼	5	6	1715	2000	1582	35·3	21	56·3
Double-ended boiler, having two combustion chambers, each common to furnaces at *same* end, ..	1	12	0	14	0	4	41	5	3	376	3¼	5	3	1630	2000	1582	36	21	57
Double-ended boiler, having four combustion chambers, one to each furnace, ...	1	12	0	14	0	4	41	5	2	376	3¼	5	2	1610	2000	1582	36·4	21·5	57·9
Single-ended boiler, having three combustion chambers, one to each furnace, ...	1	14	6	9	7	3	45	6	9	274	3½	6	9	1640	2000	1582	37·25	22	59·25
Two single-ended boilers, each having two combustion chambers, one to each furnace, ...	2	11	0	8	4	4	39	5	10	340	3¼	5	10	1645	2000	1582	39·2	21·4	60·6

with a sectional area equal to *one-eighth the area of the grate.* In the mercantile marine a somewhat larger funnel usually obtains, the area being from one-fourth to one-sixth that of the grate; in general practice a funnel, whose sectional area is one-fifth to one-sixth that of the grate, and whose top is at least 40 feet from the level of the grate, will give a very good result. The objections to a large funnel, beyond that of space occupied and cost, are resistance to the wind and large surface exposed to the cooling action of both wind and water, whereby the hot column within is partially cooled, and the draught thereby checked. On the other hand, a small funnel is liable to become excessively hot, and when the fires are freshly charged to become choked with smoke, and at all times it tends to check the draught. The funnel of a war-ship may be small, because it is so seldom that the boilers are urged to the utmost, and it must be as small as possible for obvious reasons. When the draught is forced either by a blast, or by other artificial means, the funnel may be short, and of comparatively small diameter. The area at the base of a locomotive boiler is seldom more than one-tenth the area of fire grate, and often as small as one-twelfth.

CHAPTER XIX.

WATER-TUBE BOILERS.

Such boilers as are composed wholly, or nearly wholly, of small tubes, are called sometimes "tubulous" boilers and sometimes "water-tube" boilers; in modern times, the latter name has been the most general. Singular to say, the same causes that have brought this type of boiler to the front in our time operated sixty years ago on the minds of the engineers of that day, so as to produce many inventions and numerous patents, some of which are the prototypes of the most successful boilers of their kind in use at the present time. Others, while displaying a very considerable knowledge of the laws governing the circulation, so necessary for the success of every boiler, and indicating a mechanical knowledge of the highest order, were almost impossible of manufacture then, and have not survived, owing to their inferiority to other designs. In the third decade of this century, when the railway locomotive had been tried and found to be a success, many minds were engaged on designing and perfecting steam-driven road carriages; in other words, they were attempting to substitute for the stage coach and the four-horsed travelling carriage a similar conveyance with a steam engine as the motive power. Now, on an iron track the weight of the engine was not of very serious moment; but to run successfully on a turnpike road, without doing such damage as would prohibit its use, such machinery was necessarily as light as possible, because it was carried on the same four wheels as the

passengers and luggage had hitherto been carried. Naturally, therefore, attention was drawn to the boiler as being by far the heaviest part of the machinery, and of that part the water was no inconsiderable item; hence, engineers availed themselves of their knowledge of the properties of the cylinder to devise boilers on the tubulous system. Of these, by far the most ingenious was that patented by the well-known Goldsworthy-Gurney in 1827, consisting of a horizontal cylindrical drum on the top, and a somewhat smaller drum at the bottom, these two being connected by down-cast pipes at the ends, and by up-cast pipes at the sides, the latter being in the shape of the letter S, and each pair together forming the figure 8 (see fig. 113). This boiler is interesting, as being the forerunner and type of the Thornycroft (fig. 117) and other similar boilers of to-day. There were other forms almost equally interesting, especially one in which the up-cast tubes connecting the upper and the lower drums being like the letter U, projecting horizontally, as in the case of the Du Temple boiler, and had the fire underneath them. In another design by the same ingenious gentleman there was a similar boiler, but with one nest of larger tubes, the bottom parts of the nest forming the firegrate; while in yet another instance, an ingenious arrangement was effected by having two sets of tubes (right and left-handed) on this system, and interlaced into one another so as to form a central furnace, the fire-bars, of course, being the lower part of the tubes. Gurney's boiler was intended for a working pressure of 130 lbs. per square inch; but even in those days it was anticipated that steam of much higher pressure might be used, and it was probably only the want of means of manufacture and the absence of a suitable design of engines for such pressures, as well as the necessity for obtaining pure water, that prevented the general use of the tubulous boiler at a very early date.

From the beginning of this century engineers have, both in this country and America, tried the water-tube type of boiler for high-pressure steam. That made by Col. Stevens in 1805 consisted of copper tubes 1 inch diameter and about 4 feet long, bearing a strong family likeness to one of the successful modern ones. From his time to the present, the number of inventions of a tubulous form of boiler is almost legion, as every engineer at some time of his life has experienced the necessity to satisfy one or other of the conditions that make the tubulous boiler superior to every other form. These conditions may be laid down as—

(1.) Simplicity of form of element.
(2.) Simplicity of construction due to smallness and lightness of element.
(3.) Great strength of element in proportion to the working pressure and consequent large margin of safety.
(4.) Small quantity of water contained, especially in proportion to the water evaporated per hour.
(5.) General lightness of structure compared with the ordinary marine boiler.
(6.) Immunity from injury, and eventual destruction by (*a*) rapidity of raising steam, (*b*) forcing when at work, and (*c*) sudden cooling by drawing or putting out fires.

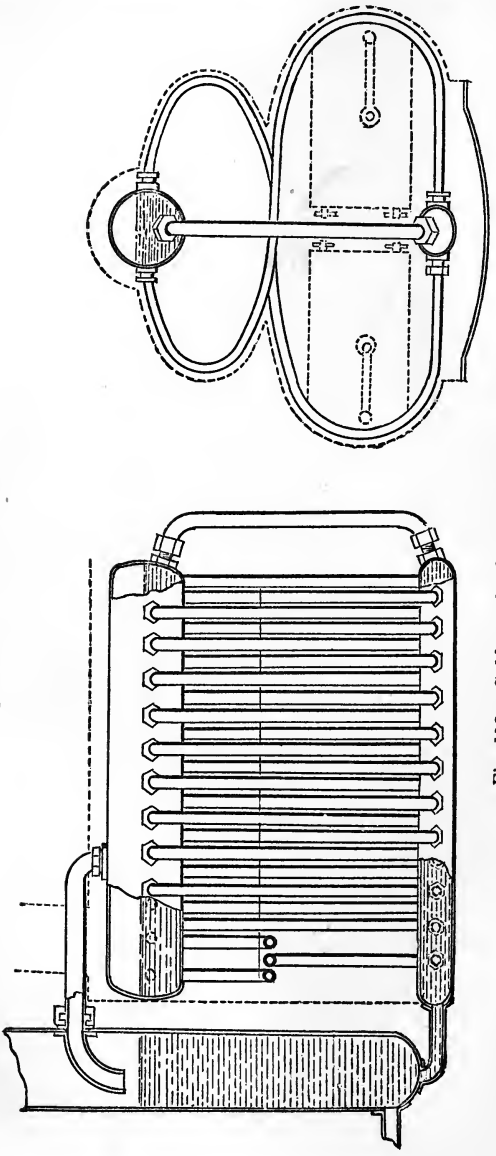

Fig. 113.—Goldsworthy-Gurney's Boiler, 1827.

Every tubulous boiler worthy of notice must fulfil the above requirements; but, to be successful for everyday use, it should also satisfy the following conditions:—

(1.) The elements of the boiler must be so disposed and distributed as to be capable of taking up the heat generated by the fire without allowing to pass to the chimney more than is sufficient for draught purposes.
(2.) The circulation of the water must be perfect.
(3.) The internal and external parts must be capable of easy examination and cleaning.
(4.) Every part liable to deterioration or derangement must be capable of removal with a minimum disturbance of other parts.
(5.) The steam in the receiver must be properly separated so as to be fairly dry.

The generic form of a large class of water-tube boilers is pretty much that shown on Mr. Gurney's design—namely, an upper chamber, into which the steam is delivered by a series of tubes surrounding the fire, and a lower chamber or chambers connected to this upper chamber by them and by downcast tubes, the latter serving to keep up the circulation through the other tubes.

Another favourite type, however, consists of horizontal, or nearly horizontal, tubes above and around the fire connecting two chambers, on the top of one of which is the steam drum, from which a connection is made to the bottom of the other for proper circulation.

The great attraction for this latter type of boiler is the ease with which the tubes may be examined, cleaned, or removed, and the freedom from priming when the parts are properly proportioned and arranged. It has, however, the objectionable feature of flat surfaces which, in most of the forms, require staying.

A third type consists wholly of small pipes, the steam drum (if existing at all) being in a rudimentary form. It need hardly be said that this class of boiler is the lightest, but it is likewise the most dangerous of the water tube type, and its employment is dependent on a regular supply of perfectly pure water.

The importance of the tubulous form of boiler has increased very much during the past five or six years, in consequence of the demand for extremely light machinery for the very high speed vessels now required for war purposes, and the possibility of employing them successfully, is the result of the introduction of the evaporator, by which pure water can be obtained from sea water. For, although previously the surface condenser and a very small supply of fresh water carried in tanks permitted of the use of water-tube boilers in the Mercantile marine, they were in almost every case a failure, owing to salt water eventually being used to make up the inevitable losses experienced in every ship, and to imperfect circulation. It is a little singular that the evaporator suggested and fitted by Hall to ships having his surface condenser should have been allowed to go out of use and be forgotten.

The general adoption of the Triple-compound engine was undoubtedly delayed for many years in consequence of the failure of

the water-tube boiler in the s.s. "Propontis," and there are not wanting amongst engineers to-day those who prophesy confidently similar results for all and every water-tube boiler now in existence or being made. But it must not be forgotten that, in past days, here and there water-tube boilers have worked successfully under the ordinary everyday circumstances of a merchant ship, including the use of salt water, and that the boilers now fitted to ships have better means for examination and cleaning than existed in former times; besides which the supply of fresh water is practically ensured.

It is not claimed for these boilers that they are any more efficient as steam-generators than the ordinary marine type of boiler; but, on the other hand, it is not admitted that they are of necessity worse generators. On the contrary, it is very possible that, under certain conditions, a water-tube boiler may be more economical in steam production than the ordinary cylindrical boiler, inasmuch as it is capable of obtaining a better circulation with less energy, and is not so liable to losses by radiation.

Hitherto, in marine practice, the heating surface in proportion to the grate has been small, and the makers and users of those boilers have been content with the other and real advantages derived from them instead of striving to effect economy by arresting the waste of heat which can, undoubtedly, take place in some forms. That the whole surface of the tubes is not efficient heating-surface goes without saying, just as no one counts as heating-surface the lower part of a furnace or flue, or the parts of a Lancashire boiler not exposed to heat. Probably only two-thirds of the circumference of the tube of any water-tube boiler acts as real heating-surface; but, for convenience of expression, the whole tube hitherto has been counted, only to serve as an argument to their detriment by interested persons.

It must also not be overlooked that, in some designs of water-tube boilers, a considerable number of the tubes, whose surface nominally counts as heating-surface, are practically not exposed to heat at all, but really act as downcasts. Reckoning, however, the whole surface of all the tubes which are or may be exposed to heat as heating-surface, the allowance should be $2\frac{1}{2}$ to $3\frac{1}{2}$ sq. ft. per I.H.P. with a triple-expansion engine, and 2 to 3 per I.H.P. with a quadruple-expansion engine. That is to say, at or about 200 lbs. pressure an efficient water-tube boiler will evaporate 6 lbs. of water per square foot of nominal heating-surface per hour.

Grate Area.—The area of the grate must in this type of boiler, as in every other, depend on the draught available, and consequently the size of grate may, to some extent, follow the ordinary rules given elsewhere; but in most forms of water-tube boilers it is not possible to work economically with so high a pressure in the ash-pit as is used with the locomotive or ordinary marine boiler. In some few forms, the obstruction to the passage of hot gases is sufficiently great to permit of a higher pressure, but in almost every

case a large grate is necessary for the water-tube boiler, in order to distribute the heat evenly over the whole of the boiler. Moreover, it is not a good thing to have the fire too intense when any portion of the tubes is touching it or near it; in fact, the tubes which are contiguous to the fire, and receive the direct radiation from the glowing coals, should be made of somewhat thicker material as well as larger in diameter.

Tubes.—It is well to arrange the tubes so that access to the more remote ones permits of their receiving a fair amount of heat, and prevents those nearer the fire from getting an undue amount. As a rule, the tubes should be made of solid drawn steel, of best quality. Copper has been tried, but the difficulty of detection of a fault in solid drawn copper, as well as the well-known diminution in its strength as the temperature rises, detracts very much from its usefulness, and is more than a set off for the superior conductivity and the low corrosive character of that metal. The Admiralty insist on steel tubes being galvanised on the outside and not on the inside, the decomposition of the zinc when inside the tubes tending to production of hydrogen gas, by which an explosion might be produced on the incautious introduction of a lamp when empty. No doubt, for ships liable to be laying up out of use for long periods, the galvanising is an advantage; but for a ship that is generally in use, the necessity for it does not exist. There is, however, a further advantage in galvanising, inasmuch as in the process of pickling, defects can be discovered in the tubes which might otherwise escape detection. The small light boilers, employed in torpedo boats and torpedo boat destroyers, have up-cast tubes generally an inch external diameter and from 14 to 16 L.S.G. thick. They are expanded into the tube plates in the usual way, and when stay tubes are not used, the ends are slightly drifted so as to prevent drawing: if the tubes are galvanised, it is better to remove the zinc from the part fitting into the tube plate. For general purposes an inch tube is too small, except in steam launches; in ordinary merchant ships, as in the larger vessels for naval service, the tubes should be $1\frac{1}{4}$ ins. to 2 ins. diameter in certain forms of boilers, such as the Thornycroft, Yarrow, or Normand, and from $1\frac{1}{2}$ ins. to 3 ins. in those boilers in which the tubes are horizontal, or nearly so. In the Mercantile marine, where weight is not of such paramount importance, the tubes of the horizontal boiler may be even somewhat larger still, especially those in the immediate vicinity of the fire.

Circulating Tubes.—The down-cast pipes are better to be of comparatively large size and few in number, so situated as not to be exposed to heat, and to be in the way of the natural horizontal flow of the water current. These down-cast pipes are, as a rule, 3 inches to 6 inches diameter, but when a water wall is formed by tubes placed touching one another in the main part of their length, but their ends worked zig-zag fashion at the upper and lower receivers, they may be of the same size as the ordinary tubes, these, of course, acting as down casts.

Stays.—In designing a water-tube boiler the same care must be exercised, as with the ordinary boiler, in arranging the stays so as to resist deformation and destruction. Many engineers, following the example of their locomotive brethren, depend on the ordinary tubes to effect this purpose; and, no doubt, so long as they are in normal condition they may be relied upon; but when the boiler is such that the tube ends might at any time become abnormally hot and be suddenly cooled, it would not be safe to depend on ordinary tubes for holding the parts together. When straight tubes are employed, stay tubes may, of course, be fitted, as in the ordinary boiler. General stiffness, as well as local stiffness, is usually obtained by making the tube plates abnormally thick, and, when the tube plate forms the part of a cylindrical drum, this thickness is necessary for strength to resist tangential strains.

Steam Drums.—The size of the steam receiver is dependent, as usual, on the volume of steam produced, and in order to keep the size down as small as possible, as well as to prevent priming, it is customary to work these boilers at a very high pressure, there being little difference in weight between such a boiler and one made for a much lower pressure. The requisite pressure at the engine is obtained by means of a reducing valve. If, however, the boiler is to be worked at the same pressure as the engines, and that pressure is only 150 lbs., the steam dome must be of considerable size; in fact, it must follow the rules laid down for ordinary boilers; it is better, however, to use water-tube boilers with higher pressures, 180 lbs. being about the lowest advisable.

The Two Types.—The modern marine water-tube boilers may be roughly divided into two classes, the one having drowned tubes (that is, tubes whose upper ends are submerged in water), and the other having the upper ends exposed to steam only when the circulation is maintained by priming or raising of the water with the steam in the pipes, and the discharging of it into the bottom of the steam receiver. It is claimed by the makers of the latter class that the steam obtained is quite as dry as that produced by the submerged tube boiler. Of course, dash plates and other means are provided for separating the steam from the water besides the usual internal steam pipe: even with submerged tubes it is sometimes found advantageous to fit baffle plates so as to ensure steady circulation and prevent priming. The design of the priming boiler is one that admits of a greater length of tube and a longer exposure to heat than is usual with the other forms in which the tubes are straight, or nearly straight, and their advocates claim for them an elasticity and power of resisting sudden changes of temperature superior to that of the straight tube boiler. On the other hand, they have the obvious disadvantage of cost of manufacture as well as impossibility of internal examination, besides the difficulty and costliness of removing and replacing an injured tube.

Perkins' Boiler.—The Perkins family have been devoted for nearly a century to the development of the water-tube boiler, with

the object of producing and using steam and water at very high temperature and pressure. The late Mr. Jacob Perkins took out numerous patents to that end, and the late Mr. Loftus Perkins, following in his footsteps, adapted these inventions to marine purposes, aud eventually fitted a yacht, the "Anthracite," of considerable size, with which he successfully made a voyage across the Atlantic and back to prove the capabilities of his system. The Perkins' boiler, as generally known, consists of a series of horizontal rows of tubes, connected by vertical tubes at intervals, so as to form a complete and connected system. There is at the bottom a somewhat larger tube, into which the feed-water is pumped, and in which mud, &c., is deposited; and at the top there is also a larger tube, forming a steam receiver for the system. The fire is, of course, at the bottom, and the hot gases and flame flow among the tubes, and are spread and directed by means of baffle plates. The difficulty of circulation in this boiler is caused by the steam which is formed in the lower tubes forcing its way through the vertical tubes, and preventing a sufficient flow of water back into them; some of the steam remains in the upper part of the horizontal tubes, and, being a bad conductor of heat, does not prevent them from being burnt. The fact is, that it is essential in every water-tube boiler that the circulation be such as to rapidly carry off the steam when formed from the vessels in which it is generated, so that the surfaces exposed to fire or intense heat may be continually kept in contact with water.

Herreshoff Boiler.—In the very early days of the century other inventors, besides Mr. Jacob Perkins, attempted to produce high-pressure steam with the lightest possible apparatus, by making a boiler entirely of small tubes, and another inventor went so far as to construct one consisting of a single tube coiled roughly into the shape of a bell or beehive, and placed this over a fire. Water was pumped into the lower end of this coil, and steam emitted from the upper end. As might be anticipated, the generation of steam was most rapid, and attended with considerable risk to the onlookers. So long as the feed supply was regular and the water perfectly pure, this boiler could be used with impunity; but even now, as in those early days, no feed pump could be relied upon to work with the necessary uniformity, and as in practice, all water contains more or less solid matter, such boilers were found impracticable, and the more so as, from the curved form of the tube, it was impossible to examine or clean them mechanically. The Herreshoff boiler is a modern form of this type, which has been always a favourite one for certain purposes in America; its inventor subsequently perfected a design of it which worked with a considerable degree of success, and it was introduced by him into this country. Eventually, however, it met with the fate of its prototype, so that it is now seldom or never used. His boiler consisted of two coils of pipe; the outer, which is in the form of a closed cylinder, is made of tubes of uniform section, connected at their ends by

welding so as to be continuous; the inner, which is in the shape of a bell, is likewise made of continuous tubes, but those forming the sides of the bell are of larger section than that forming the crown. The top of the outer coil is connected to the top of the inner, the bottom of the outer is connected to the feed pump, and the bottom of the inner to a steam drum or receiver, from which the engine takes steam. The fire is in the inside of the bell, which is supported on brickwork, and is similar to that of a vertical donkey boiler. The outer coil is cased in with sheet iron, and the inner is partly so covered. The water, in traversing the outer coil, is gently heated by the waste heat; on traversing the crown of the bell it is rapidly heated, so that when it enters the larger pipe it is in a state of ebullition, part steam and part water; when it has traversed the whole length of the coil it should be all steam.

Watt's Boiler.—Mr. Watt has for many years given great attention to the designing and making of water-tube boilers, and his, of their kind, have been most successful. In this, the tubes are in parallel layers, slightly inclined to the horizontal, and the ends of the whole of them connected to two narrow flat boxes. The back of these boxes is stayed to the tube plates, and opposite to each tube end is a hole through which the tube may be examined and cleaned on removing the cover. It is seen that the two boxes serve as chambers for the water and steam, as well as to connect the tubes together. The steam formed in the tubes of this boiler flows gently along their upper surface, aided by their inclined position; it finds its way into the front chamber, and rises into the upper part of it; as the steam forms and flows away from the tubes, it is replaced by water from the back chamber, into which the feed water is pumbed.

D'Allest Boiler.—This boiler, which is a favourite one in France, is somewhat similar to Watt's boiler in principle and general design, though differing from it to some extent in detail.

Babcock and Wilcox Boiler (Fig. 114).—The two gentlemen whose names are joined in the patent and give the title to the Company that manufactures these boilers, devoted many years to the perfecting of their system. In this case the flat boxes of the Watt boiler and of the D'Allest boiler are replaced with narrow sinuous chambers (called "headers," Fig. 115) placed nearly vertically side by side. With this arrangement staying is unnecessary, but opposite the tube ends are the usual openings, as in the above named boilers, fitted with doors or plugs. The top of each front header is connected by a pipe to a drum of considerable size, placed immediately over the back headers, and to which it is connected also by pipes. The front and back headers are connected by a large number of inclined tubes; but in the case of this boiler they are of much smaller diameter than in others of the same type. The circulation of the water is obvious and good, and of such a nature that this boiler may be classed as a priming one. The furnace is, of course, beneath the tubes, and extends nearly to the full width of the

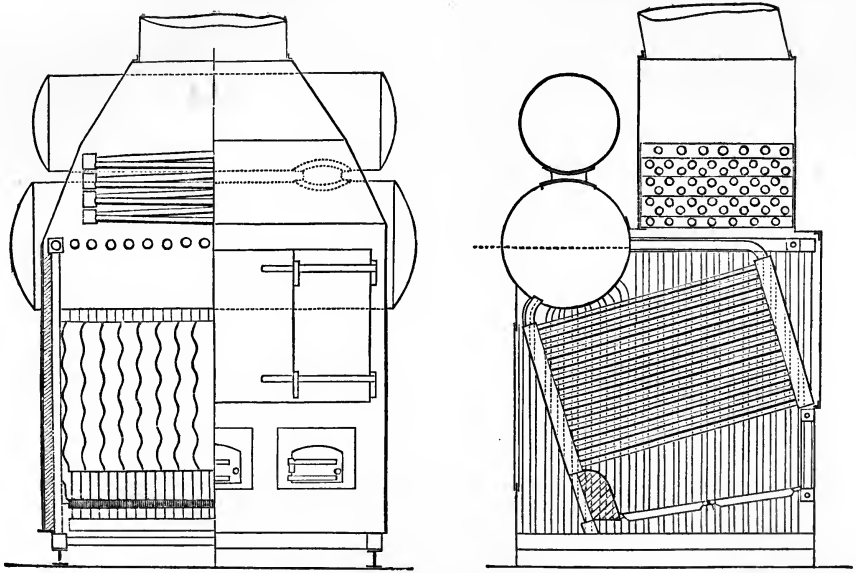

Fig. 114.—Babcock and Wilcox Boiler.

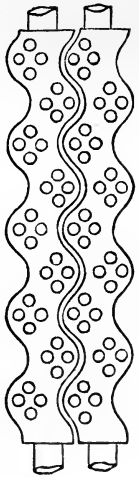

Fig. 115.—Headers.

boiler. On each side of the boiler, forming a water wall, is a system of small vertical tubes, fitted into a horizontal box at the bottom, and into a similar horizontal box of square section at the top. The top boxes are connected also to the steam drum, and at the opposite ends the top and bottom boxes are connected by external circulating tubes. These boxes and the "headers" are of square section, and made of wrought iron or steel, welded up and neatly finished. The tubes throughout are simply expanded in the tube holes, and although it appears to be a most difficult operation to thus secure them, and a still more difficult one to tighten them if they leak, in practice all such difficulties have been overcome, and these boilers found to work most satisfactorily. It need hardly be said that the use of clean, soft water is essential. In the later marine type the tubes adjacent and near to the fires have been enlarged very considerably, so that, instead of being about 1½ inches diameter, as were the other tubes, they are now at least 2½ inches diameter, and the water walls are formed of horizontal tubes fitted into "headers," in the same way as those in the main body of the boiler. These boilers are lighter in proportion to their output of steam than the ordinary cylindrical boiler; but they are not so light as some of the other forms of water-tube boilers; although, in this case, there is not the same necessity as exists in others for working at a high pressure to be successful, and in this respect it is a formidable competitor with one or two of the other forms of water-tube boiler when required to be of large size. The Babcock and Wilcox firm sometimes fit into the uptake what is virtually an extension of the boiler, and call it a feed heater: this, of course, materially adds to the economy of the system, as it also adds considerably to the weight.

Normand Boiler.—Fig. 116 shows the form of boiler patented and adopted by M. Normand, of Havre. It consists essentially of one horizontal upper drum of considerable diameter, and two lower drums of much smaller diameter, the lower ones being placed on each side of the fire, and connected to the upper one by tubes of small diameter, bent to such form as to obtrude the greater part of their length into the space above the fire, and so receive heat from it, and at each end so as to be normal to the surface into which they fit. The upper and lower drums are likewise connected at their ends by larger tubes, which act as downcasts, so that the water circulates up through the smaller tubes into the upper chamber, delivers the steam with which it is charged, and flows away to the end of it and down through the outer tubes to the water drums below. This boiler exposes a very large amount of surface, both to the direct action of the fire and to hot gases. The circulation is perfect; there are no flat surfaces requiring to be stayed; the drums themselves are of the cylindrical form, with spherical ends, so as to be as light as possible consistent with strength; and by the disposition of the tubes at the front and back, there is a minimum amount of brickwork required for a boiler of this kind, while the tubes have a

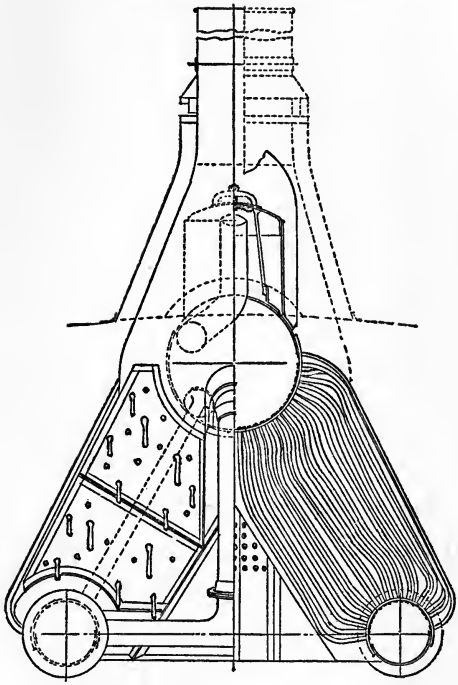

Fig. 116.—Normand Boiler.

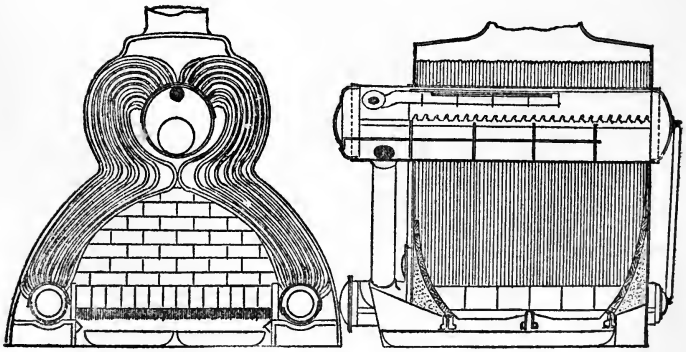

Fig. 117.—Thornycroft Boiler.

sufficient amount of curvature to permit of considerable elasticity in the whole structure, so as to enable it to withstand the rough usage of rapidly raising steam. On the other hand, the tubes cannot be cleaned mechanically nor examined, either internally or externally, and, in the event of a tube splitting, or becoming otherwise so damaged as to necessitate removal, unless it be an outside one, great expense is entailed by having to remove the other tubes that surround it to get at it.

Blechynden's Boiler.—Mr. Blechynden has patented a boiler which gets over the latter difficulty by so forming the tubes, that they will draw through the holes in the upper chamber in a direction centreing on comparatively small hand holes in the upper part of the drum, so that each tube can be drawn out of the boiler through one or other of these apertures, without disturbing any of the other tubes.

Ferguson and Fleming's Boiler.—Messrs. Ferguson and Fleming make a boiler similar to the Normand, and get over the difficulty of drawing the tubes by limiting their length from end to end to the diameter of the upper drum, so that each and every one of them can be drawn into this drum without affecting the surrounding tubes.

Seaton's Boiler.—In this boiler there are two water drums at the bottom, as in the Normand, and two steam drums at the top; there is an intermediate water drum between them, of sufficient size to admit of the tubes connecting it to the upper and lower drums being drawn into it and removed. In this case the tubes are straight, so that from the middle drum every tube can be examined and cleaned, as well as removed; the transverse section of the boiler is the shape of the letter X. In addition to the advantages of being able to examine, clean, or remove every tube at the middle chamber, there is in this boiler the additional one of the hot gases being forced to flow twice through the tubes before emerging into the funnel. The upper and lower drums in this boiler are connected by a water wall of tubes, which act as downcasts.

Yarrow Boiler (Fig. 118).—This boiler, the invention of the well-known Mr. A. F. Yarrow, has proved to be one of the most successful in practice, both in the production of steam, and its capability of being examined, repaired, or cleaned, and it can, besides, withstand the same rough usage as the Normand. It differs from the Normand boiler, however, in having straight tubes only, so that from the upper drum they can all be examined and cleaned. In the earlier forms of it, this drum was made in halves, the top of it being connected to the lower by a flange with bolts and nuts; it was, therefore, capable of easy removal, and when this was so the bottom of the boiler consisted, as in the Normand, of two cylindrical drums; but as in the larger boilers it was found almost impossible, as well as inconvenient, to have a bolted joint in the upper drum, the lower drums were made in halves, so that now they are formed with a tube plate and pocket bolted to it, as shown in the illustra-

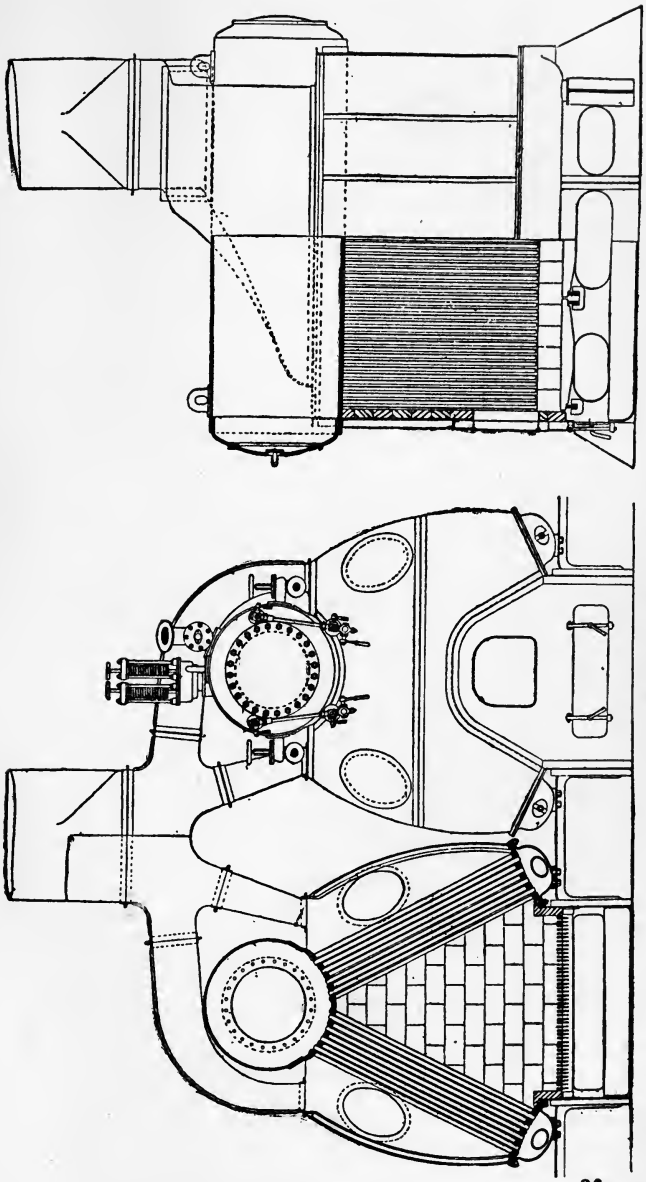

Fig. 118.—Yarrow Boiler.

tion, and to remove a tube now necessitates the taking off of one or other of the pockets.

Thornycroft's Boiler (Fig. 117). — This boiler is the direct descendant of Goldsworthy-Gurney's invention of 1827 (see Fig. 113), and consists essentially of the top and bottom drums, as in the Normand and Yarrow types, but the tubes in this case are not only bent in so as to obtrude themselves on the space over the fire, but they are carried up and around so as to enter the top of the drum instead of the bottom; it is, therefore, distinctively a priming boiler, inasmuch as there can be no circulation without the flow of water through the tubes into the steam space. There are the usual downcast pipes at each end, which are of considerable size. In this boiler there is, of course, a greater length of tube exposed to the hot gases, and consequently, if necessary, a large amount of surface per foot of grate can be provided. It has considerably more elasticity than the Normand boiler, and likewise possesses the defects of the latter, as it is absolutely impossible to examine the tubes, and, in case of damage to one of them, the difficulty of removal and replacement is considerable. Owing to the extreme curvature of the tubes, it is dangerous, from the liability of the tubes to choke with foreign matter that may be in the boiler, or get into it with the water. Experience has proved it to be a very efficient evaporator, a rapid generator of steam, and capable of very rough usage.

Du Temple Boiler.—This consists of the usual upper drum, which is of considerable size, and two lower chambers, of square section, placed above the fire level on each side of the grate. The top drum is connected to them by a nest of tubes bent zig-zag, so as to cross the flow of gases five times. The portion of tube exposed to direct action from the fire is generally made of smaller diameter than the rest of its length. There are the usual downcast pipes at the end. This boiler possesses many of the characteristics of the Thornycroft boiler, including some of the evils in a magnified form. The contraction of diameter of the tubes in the neighbourhood of the fire has certain advantages; but, on the other hand, modern practice has shown than there should be larger tubes exposed to direct radiation from the fire, and that those tubes in the immediate vicinity, although not exposed to direct radiation, are the better for enlargement.

White's Boiler.—Mr. White, of Cowes, employs a boiler quite distinct from any of the above, from the fact that the upper and lower drums are connected by a series of tubes bent into spirals, of about 12 inches external diameter, forming the upcasts, and exposing thereby to heat large surfaces with comparatively small height. Owing to the length of these tubes, the passage from the lower to the upper chamber will be somewhat protracted, or the speed of flow very much increased. There will, with this boiler, be a considerable amount of elasticity; but the spiral tubes are open to the same objection as the bent ones.

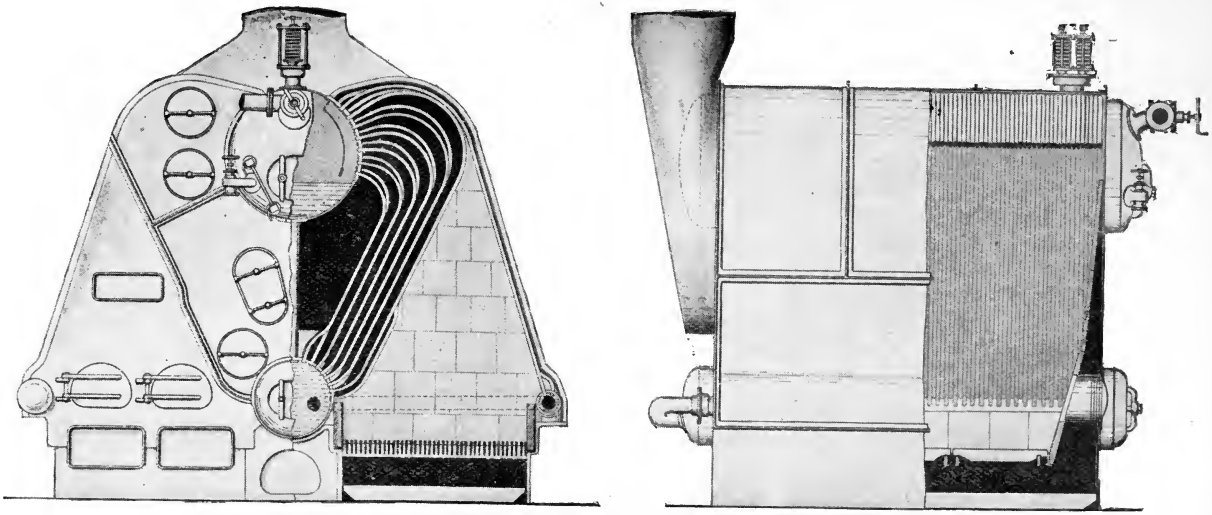

Fig. 117A.—Improved form of Thornycroft Boiler, known as the *Daring* type.

The down casts are in the middle, and there is a better distribution.

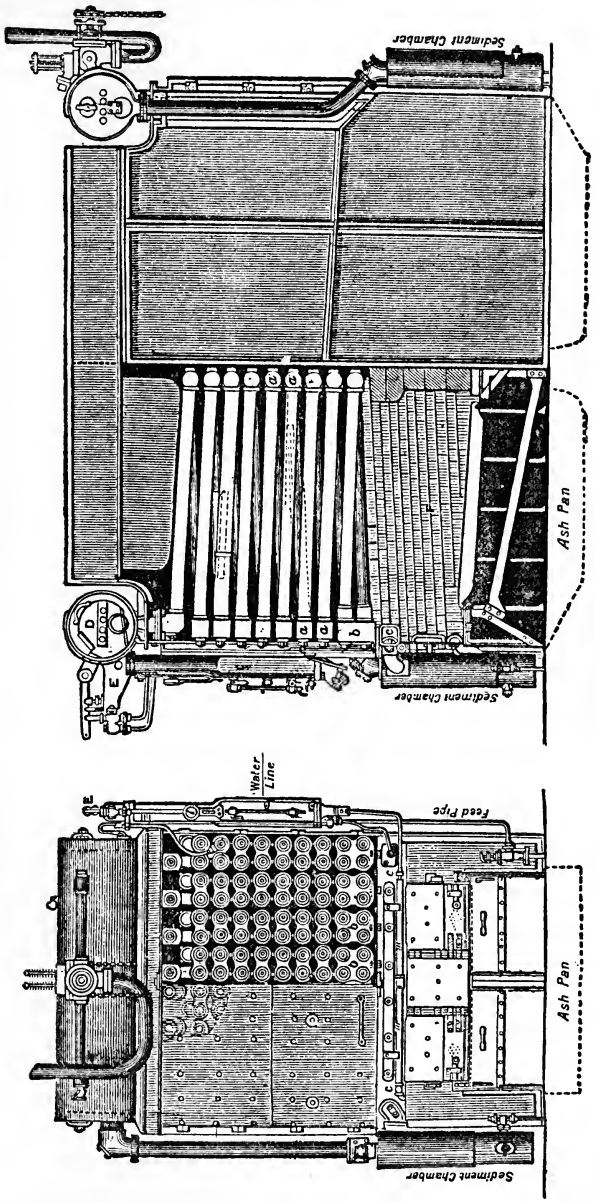

Fig. 119.—Belleville Boiler.

Belleville Boiler (Fig. 119).—This boiler has been for very many years a great favourite in France, and is fitted into many warships, as also into a large number of their merchant ships. It has also been used extensively in America, both for marine and land purposes, and it is at last being more favourably looked upon in this country, the lead in the matter being taken by the Admiralty, who replaced the wet-bottom locomotive boilers of H.M.S. "Sharpshooter" with boilers of this kind; they have also ordered the first-class cruisers "Powerful" and "Terrible," each of 25,000 I.H.P., to be supplied with them. For large ships this boiler is very suitable, and can compete most successfully with the other forms of water-tube boiler, especially in the question of weight; for smaller sizes, however, several of the before-mentioned boilers have advantages over the Belleville. It consists of the usual top and bottom drums, connected by what is virtually a set of flattened spirals; in other words, each element is of the form that a spiral spring would be if heated and flattened. There are, of course, the usual downcast pipes for circulating, besides special apparatus for preventing priming, for feeding, and for reducing the pressure. This boiler, like most of its congeners, must, to be successful, be worked with steam at a high pressure, or, to speak more correctly, with steam of low volume per lb.; consequently, the manufacturers of it usually design it for a much higher working pressure than is required, and fit it with an ingenious, and apparently reliable, reducing valve. Each element is made up of a series of tubes of considerable diameter, extending the whole length of the boiler, connected at the ends by junction pieces of malleable cast iron or cast steel, to which they are screwed, and they are zig-zagged so as to form the flattened spiral. These junction pieces have, opposite each tube end, a hole of sufficient size to admit of the thorough examination and cleaning of the tubes, and closed with a door clamped in the same way as a manhole door. The top of each element enters the upper drum with a short internal pipe, and inside the drum is a series of dash plates, so arranged as to thoroughly separate the water and the steam. There is further, however, external to the boiler, a separator, having an internal dash plate, and, at the bottom, an automatic drain. Messrs. Maudslay, Sons, & Field have taken up the agency and manufacture of it in Great Britain, and in their hands it is attaining the high character it holds on the Continent.

As a rule the water in the water-tube boiler is very considerably less than that in the ordinary boiler, and to this fact is in no small measure due the exceedingly light weight of certain boilers of this type. To the designer this is of course a great advantage, and in case of accident, either from within or from without—from a shot, for example—the possible amount of harm is limited, especially if there be no obstruction with the draught; but to the firemen it is otherwise a source of trouble, as it permits of such great variations in steam pressure from temporary causes. The reducing valve, as

TABLE XX*a*.—Weights of Boilers of Various Kinds.

Name.	Description.	Pressure.	Total Weight.	Weight Water.	Indicated Horse Power.		Weight per I.H.P. in Lbs.	
					Nat. Dft.	Fcd. Dft.	Nat. Dft.	Fcd. Dft.
		Lbs.	Tons.	Tons.				
H.M.S. "Immortalite,"	Double-ended Cylindrical,	135	188·5	59·2	3,490	4,680	118	88·0
H.M.S. "Andromache,"	,, ,, ,,	155	195·0	53·4	3,800	5,010	115	80·6
H.M.S. "Endymion,"	,, ,, ,,	155	278·0	87·3	5,425	6,100	115	102·0
H.M.S. "Pearl,"	,, ,, ,,	155	150·0	39·6	2,770	4,080	121	82·7
H.M.S. "Blanche,"	,, ,, ,,	155	117·5	33·3	1,940	3,000	136	87·8
H.M.S. "Majestic,"	Single- ,, ,,	155	325·0	86·0	5,000	6,000	145	121·3
H.M.S. "Charybdis,"	,, ,, ,,	155	205·0	54·3	3,805	4,850	121	94·7
H.M.S. "Magpie,"	Gunboat Type ,,	145	53·5	18·7	1,030	1,340	116	89·4
H.M.S. "Terrible,"	Belleville Water-tube,	260	888·0	66·0	18,000	25,000	110	79·6
Foreign Cruiser,	,, ,, ,,	260	548·0	48·0	15,000	17,500	81·9	70·1
,, ,,	Babcock & Wilcox Water-tube,	200	594·0	87·0	15,000	17,500	88·7	76·0
,, ,,	Double-ended Cylindrical,	175	697·0	206·5	15,000	17,500	104	89·2
H.M.S. "Hornet,"	Yarrow Water-tube,	180	5·4	0·6	...	550	...	20·5
H.M.S. "Salmon,"	,, ,, ,,	180	10·25	1·6	...	1,100	...	20·5
Torpedo Boat,	,, ,, ,, "Cintra,"	180	9·6	...	...	875	...	24·5
H.M.S. "Decoy,"	Thornycroft Water-tube,	210	42·55	6·3	...	4,570	...	20·9
H.M.S. "Ferret,"	Normand ,, ,,	...	47·6	11·46	...	4,510	...	23·6
H.M.S. "Conflict,"	White ,, ,,	...	61·45	...	...	4,500	...	30·5
H.M.S. "Havock,"	Locomotive Dry Bottom,	180	53·0	...	...	3,600	...	33·0
Torpedo Destroyer,	,, Double-ended,	180	30·5	8·5	...	2,250	...	30·4
S.S. "Cazengo,"	Double-ended Cylindrical, Board of Trade,	160	201·7	76·0	3,020	...	149	...
S.S. "Gothan,"	,, ,, ,, ,,	210	105·0	31·2	1,200	...	196	...
S.S. "Vienna,"	Single- ,, ,, ,,	166	212·6	63·6	2,616	3,366	179	141
S.S. "Victoria,"	,, ,, ,, ,,	150	110·5	32·0	1,540	...	161	...
S.S. "Polo,"	,, ,, ,, ,,	200	50·7	...	500	...	227	...
S.S. "Egyptian M.,"	Belleville Water-tube,	250	81·0	6·0	1,700	...	107	...
S.S. 397,	Babcock & Wilcox,	200	41·0	...	800	...	115	...

fitted to the Belleville boiler, tends to prevent any ill effect from this being experienced in the engine-room, for, so long as the pressure in the boiler does not fall below that at which the apparatus is set to deliver, there will be little or no variation at the high-pressure valve-box.

Table XX*a* shows among other things the proportion of water to the total weight in the various classes of boilers. The total weight includes, besides the boiler proper, the water mountings and fittings; the furnace fittings, brickwork, &c.; the casings and uptakes to the funnel base; in fact, everything is included that is necessary to make a fair comparison. Taking naval boilers of the double-ended type, the average weight of water is about 29 per cent. of the total weight; while with single-ended naval boilers, it is about 26 per cent. The steam pressure for which these boilers were designed is, however, only 155 lbs. With double-ended boilers made in accordance with the Board of Trade Rules for pressures of 160 lbs., the water is about 33½ per cent. of the total weight, and about 32 per cent. with the single-ended boilers. With the Gun-boat type of boiler, the water is 33 per cent. when designed in accordance with the Admiralty Rules. With the Belleville boilers the water is only about 8 per cent. of the total weight; with the Babcock and Wilcox boilers about 14½ per cent.; with the Yarrow boiler about 15½ per cent.; with the Thornycroft boiler 15 per cent.; and with the Normand boiler about 24 per cent. The dry-bottom locomotive boiler, which is the great rival of the smaller class of water-tube boiler, has water to the extent of 30 per cent. in the single-ended design, and about 27¾ per cent. with the double-ended variety.

It will be seen by reference to Table XX*a* that the total weight per I.H.P. at forced draught is on the average with the ordinary naval double-ended boilers about 88 lbs., and with the single-ended ones 108 lbs. The lightest of all is 80·6 lbs. The Belleville and the Babcock and Wilcox are both under 80 lbs., and with an air pressure of 1 inch of water the weight is as low as 70 lbs. with the Belleville. Taking the naval cylindrical boilers with natural draught the average weight per I.H.P. is 121 lbs. with double-ended boilers, and 133 lbs. with single-ended. It is true that the latter figure is for the larger sizes now allowed by the Admiralty for battle ships and cruisers. With the Belleville boilers the weight per I.H.P. is 82 lbs., and the Babcock and Wilcox 88·7 lbs.; and with the large allowance provided in the new cruisers it is only 110 lbs., or 11 lbs. less than the old double-ended boilers for 155 lbs. pressure, and 23 lbs. less than the single-ended boilers for 155 lbs. pressure now supplied to the navy. It is manifest by these figures that there is a distinct saving in weight with the water-tube boilers in large ships. It is, however, in the smaller class of vessels that the great advantage in using these boilers is experienced. Here types of boilers can be employed that would hardly be admissible in the larger ships, and the full advantage of

the system can be utilised. By again referring to the Table, it will be seen that with the locomotive boiler the weight per I.H.P. is 33 lbs. with the single-ended variety, and 30·4 lbs. with the double-ended. With the Yarrow boiler the weight is only 20·4 lbs., and considerably under the locomotive with all the other forms now being fitted into torpedo boat destroyers. The great saving in each case is, of course, due in great measure to the water.

When the cylindrical boiler is designed in accordance with the Board of Trade Rules, the difference is more marked, for here the double-ended boiler is such that the total weight per I.H.P. is 149 lbs. when the working pressure is 160 lbs., and as much as 196 lbs. when it is 210 lbs. pressure. Single-ended boilers are, of course, heavier still. The Belleville boiler is only 107 lbs. per I.H.P. with a working pressure of 250 lbs., and the Babcock and Wilcox 115 lbs. for a pressure of 200 lbs.

The space occupied by these boilers does not differ materially from that required for cylindrical or locomotive boilers, and the stoke-holes, as a rule, must be as long; but with some water-tube boilers a comparatively short stoke-hole is sufficient. The water-tube boiler is capable of a subdivision that does not obtain with the cylindrical, and in this respect it is in the hands of the designer much as the old box boiler was.

Feed Arrangements.—It is, of course, essential to the good working of these boilers as of all boilers containing such comparatively small quantities of water, that the supply of feed-water shall be regular and delivered in such a way as to improve rather than to retard the circulation. To satisfy the first condition, it is necessary to have good feed-pumps and a good supply of water, from which they may draw whenever required. The ordinary engine pump drawing from the hot-well is always more or less intermittent in its action, and while no great inconvenience is felt when it is supplying the ordinary tank boiler or the larger kinds of water-tube boiler, it would not suit the more delicate ones. It may, therefore, be taken, as a rule, that this class of boiler should have an automatic apparatus for controlling the feed. The Belleville boiler is always fitted with such an arrangement, which consists essentially of a chamber in which there is no disturbance by circulation or other cause, but so connected to the boiler that the water level in it is the normal level of the water in the boiler. It contains a "float" arrangement which operates in an ingenious, if somewhat complicated, way, a controlling valve on the feed-pipe, so that, as the water falls in the boiler, the feed-water is allowed to pass, and as the water rises above the working level it is gradually shut off. Mr. Thornycroft and others have adopted somewhat similar methods for regulating the supply. Other engineers have, however, preferred to fit to each boiler an independent donkey pump, and to set it working with steam from its own boiler at such a speed as to just keep up the supply. This method, while convenient, cannot be said to be automatic; it might, however, be so

if to the feed-valve, or even to the steam-valve, of the donkey is fitted a means of controlling by a similar apparatus to the above. As the variation of level in most water-tube boilers is somewhat limited, the "float" apparatus cannot have a great range.

It is a disputed point whether to admit the feed-water into the upper or lower chamber; but if the principle of aiding and not obstructing circulation is observed, there need be little or no controversy on this point. Each case must be dealt with on its own merits; but, as a general rule, unless the feed-water is well heated, it is better admitted to the bottom chamber or at the downcast part of the upper chamber in a direction of the downward flowing currents; by preference the latter is more likely to aid circulation. In this case, the feed-pipe may with advantage be made small, so that the water is injected at a high velocity. When the water is well heated before admission to the boiler proper it is not of much importance where it is taken, but an internal pipe with small outlets to insure distribution should be fitted.

It is usual and advisable also to fit water-tube boilers with a settling chamber into which any solid matter admitted with the feed-water can be deposited and blown out. The principle on which these act is that solid matter of higher specific gravity than the water will deposit in an enlargement of a channel where there is a reduction in the velocity of flow; a change in direction of flow also helps to deposit. A certain amount of lime is used with advantage in these boilers, and a means for admitting it is necessary. As a rule, it may be introduced with the feed-water by placing it in the tanks.

In arranging casings and uptakes great care should be taken to ensure a good distribution of the hot gases over the whole of the tubes. The tendency to short circuit is, of course, strong, and to prevent it considerable judgment is necessary in the placing of baffle plates and other devices. It is a matter of experiment, however, to so place them as to get the best results.

The fire-places in water-tube boilers are generally of such a nature as to require a brickwork erection; in fact, in the case of the Belleville boiler the brickwork is very extensive, but in the case of most of the others, and especially of the lighter kinds, the brickwork is limited to the immediate neighbourhood of the fire, the rest of the boiler up to the base of the funnel being enclosed with light iron-work, either lined with asbestos or in some other way protected from the direct action of the heat of the gases. As far as possible it is better to use water walls than brickwork, both of which are only absolutely necessary to resist contact of the flame or direct radiation from the glowing fuel. Casing plates outside the tubes, not subject to the direct action of the fire, may be of very thin sheet steel, especially if stiffened with light angles or by corrugations; it is generally made portable, so that it can be easily removed for the cleaning of the outside of the tubes or the repairing of the boiler when necessary. Sheet asbestos $\frac{1}{4}$ inch thick forms a very good protection to these thin casings; it requires to be carefully secured

and protected from damage, and for this purpose it is often completely covered by thin sheet steel, but this covering should be avoided if possible. Two layers of asbestos millboard, with a space between them practically sealed, so as to prevent air circulation, makes a still better shield, and with care in fixing it will withstand a considerable amount of wear and tear. The Admiralty do not now require the fitting of dampers to the uptakes of water-tube boilers as fitted in the torpedo boat destroyers, and, indeed, the necessity for them does not exist, while their presence may be a source of danger. The evaporation with these boilers is quickly checked by leaving the fire door open, or, when so arranged, by shutting off altogether access of air to the fire. Without the damper the bursting of a tube or other serious leakage is not dangerous, as the steam escapes immediately up the funnel. The Admiralty also require to be fitted an apparatus for drenching the fires with water, which can be operated both from the stockhold and on deck. The tubes do not get covered with soot and dust so badly as might be expected, and when Welsh coal is used in the boilers the deposit is easily removed.

CHAPTER XX.

BOILERS—CONSTRUCTION AND DETAILS.

BOILERS for the mercantile marine are nearly always constructed in accordance with the rules laid down for the scantlings by the Board of Trade or Lloyd's Registry. If a ship requires a passenger certificate, the boiler must be built in accordance with the Board of Trade rules and regulations; and if to class at Lloyd's, those of Lloyd's Registry must be followed. If both a Board of Trade certificate and a Lloyd's machinery certificate are requisite, the boiler must be so designed as to accord with the rules of both. It is much to be regretted that these two public institutions do not agree to one set of rules which shall be acceptable to both, and in accordance with the best engineering knowledge and experience of the day. Both sets of rules are based on scientific principles and practical experiments on a large scale, and differ only slightly from one another in consequence. They chiefly differ on the question of the factor of safety, and the differences on this point arise from the allowance included covertly for wear and tear; the survey in the one case being yearly, and in the other often at longer intervals.

Ships built for mercantile purposes, but neither classed at Lloyd's nor requiring a passenger certificate, have boilers constructed *in accordance with the rules* of one or the other institution; and he would be a rash man who should choose to vary much from either, and be responsible for it.

The Admiralty rules are not so stringent nor so extended as those of the Board of Trade, as the circumstances of naval construction require a little more elasticity.

Boiler Shell, Cylindrical.—This is the simplest and strongest form to withstand internal pressure; because, since a circle is the figure of least perimeter for a given area, there is no tendency to change of form, the metal is strained in one way only,—viz., tangentially and in tension.

The total pressure tending to rupture a cylinder is the part of all the pressures acting at the various points in direction normal to the surface resolved in one direction. This is equivalent to the pressure on the plane through the axis of the cylinder.

Rupture is resisted by the two sections of metal at the sides.

Let D be the diameter of the thin cylinder, and L its length in inches; p the effective pressure per square inch, and t the thickness of metal in fractions of an inch.

Then the pressure tending to burst it $= p \times D \times L$.

The strain per square inch on the metal resisting this is

$$= \frac{p \times D \times L}{L \times 2t} = \frac{p \times D}{2t}.$$

Let T be the ultimate strength of the material in pounds per square inch, and F be the factor of safety deemed advisable, and let $T \div F = f$.

Then the safe working pressure for a boiler shell, or other cylindrical part subject to internal pressure $= \frac{2t \times f}{D}$.

This holds good only when there is no joint or other cause of reduction of effective area of plate.

Since a boiler shell is made of one or more plates connected by riveted joints, the effective area of plate is that part remaining between the rivet holes.

If the plates are connected by means of a single row of rivets, the average value of the part remaining between the rivet holes is 56 per cent. of the whole plate; so that in this case

$$\text{Safe working pressure} = \frac{2t \times f}{D} \times \frac{56}{100} = \frac{t \times f}{D} \times 1{\cdot}12.$$

When the plates are connected by two rows of rivets, so that the joint is said to be a double-riveted one, there is on the average 70 per cent. of the plate remaining between the holes; in this case

$$\text{Safe working pressure} = \frac{2t \times f}{D} \times \frac{70}{100} = \frac{t \times f}{D} \times 1{\cdot}40.$$

It will be seen that the double-riveted joint is more than 25 per cent. stronger than the single-riveted. This difference is due to the wider spacing of the rivets which can be allowed, in consequence of the increase of rivet area obtained with the two rows.

The value of F depends on the kind of material, and on its quality.

The following are the values given by Professor Rankine and others, as obtained by careful experiments made by several eminent engineers:—

TABLE XXI.—Tenacity of Plates.

Description of Material.	Tenacity in Pounds.		Ultimate Extension.	
	With Grain.	Across Grain.	With Grain.	Across Grain.
Best Yorkshire, highest,	58,487	55,033	0·109	0·059
,, ,, lowest,	52,000	46,221	0·170	0·113
Staffordshire boiler, highest,	56,996	51,251	0·04	0·034
,, ,, lowest,	46,404	44,764	0·13	0·059
,, best best, highest,	59,820	54,820	0·05	0·038
,, ,, lowest,	49,945	46,470	0·067	0·04
,, common,	50,820	52,825	0·05	0·043
Lancashire,	48,865	45,015	0·043	0·028
Lanarkshire, highest,	53,849	48,848	0·033	0·014
,, lowest,	43,433	39,544	0·093	0·046
Durham,	51,245	46,712	0·089	0·064
Prussian,	52,416	50,848	0·238	0·146
Siemens' steel, annealed, average,	64,620	64,485	0·246	0·236
Whitworth compressed steel, No. 1 red,	71,680	...	0·340	...
Iron (allowed by Board of Trade),	47,000	40,000	...	...
Steel ,, ,,	64,960	...	...	...
Copper sheets,	30,000	...	...	...
Brass sheets for tubes, 70% copper,	80,640	...	...	...

The Admiralty required that the iron plates intended for boiler shells should have an ultimate tensile strength of 22 tons with the grain, and 18 tons across the grain, and should stand bending cold; and that the steel plates shall have not less than 27 tons and not more than 30 tons of ultimate tensile strength per square inch, and stand cold bending double to a curve of which the inner radius is one and a-half times the thickness.

Riveting.—The longitudinal seams or joints of a boiler shell are made in one of the following ways:—

(1.) *Lap joint and single-riveted.*—The plates in this case are lapped one over another, and united by a single row of rivets. This method is only adopted when the plate is thicker than required for mere strength, so that 56 per cent. of it is sufficient to safely withstand the pressure. This generally arises in the case of small boilers and steam receivers, where the diameter is comparatively small, and the thickness of plate which is sufficient to withstand the pressure would not permit of caulking, nor give the allowance for deterioration.

Rivet metal is always softer than boiler plate, and its resistance to shearing is less than that of the latter to tension, for this reason the area of the rivets should be greater than that of the plate

remaining between the rivet holes; but, on the other hand, whereas the plate is subject to reduction by wear, the rivet section is not so affected, and in consequence it is usual to allow the same area of rivet.

Taking 56 per cent. as the proportion of plate between the holes, p the pitch, and d the diameter of the rivets,

$$\frac{\text{Pitch of rivets}}{\text{diameter}} = \frac{100}{100-56},$$

or

$$\text{Pitch of rivets} = 2{\cdot}273 \times \text{diameter}.$$

Since the area of rivet = the portion of the plate between holes,

$$\frac{\pi}{4}d^2 = (p-d)\,t = \frac{56}{100}\,p \times t.$$

Substituting the value of p as found above,

$$\text{Diameter of rivet} = 1{\cdot}62 \times \text{thickness of plate}.$$

Example.—To find the pitch and diameter of rivets for a single-riveted lap joint, with plates ½ inch thick, strength of joint being 56 per cent.

$$\text{Diameter of rivet} = 1{\cdot}62 \times \tfrac{1}{2}, \text{ or } 0{\cdot}81 \text{ inch}.$$

$$\text{Pitch of rivets} = 2{\cdot}273 \times 0{\cdot}81, \text{ or } 1{\cdot}84 \text{ inches}.$$

The lap of the plates is three times the diameter of the rivet; if it is made more than this, the plate will spring in caulking; if made less, there is danger of bulging or cracking the edges, and also there is no margin for recaulking if required.

The following table gives the pitch, &c., as found in general practice.

TABLE XXII.—Lap Joint, Single-Riveted.

Thickness of Plate.	Diameter of Rivet.	Pitch of Rivet.	Breadth of Lap.	Percentage of	
				Plate.	Rivet.
¼	½	1½	1½	56	69
5/16	5/8	1⅝	1⅞	58	65
⅜	¾	1⅞	2¼	57	67
7/16	7/8	2⅛	2¼	57	58
½	7/8	2⅛	2⅝	58	56·7
9/16	1⅛	2⅜	2 3/16	56	57·7
⅝	1	2¼	3	55·5	55·8
11/16	1⅛	2½	3¼	55	57·8
¾	1⅛	2⅜	3¼	55	53·0

(2.) *Lap joint and double-riveted.*—Here there are two rows of rivets. Sometimes the rivets of one row are exactly in line with those of the other, and then called "chain" riveting; but more frequently those of one row are in line with the middle of the spaces of the other, and it is then called "zigzag" riveting. The latter plan requires less lap, and makes tighter work than the former, but does not leave the plate so strong, especially when the holes are punched. Here again the rivet area is generally made the same as the area of the plates between the holes. Taking the proportion of the plate between the holes at 70 per cent.

$$\frac{\text{Pitch of rivets}}{\text{diameter}} = \frac{100}{100 - 70},$$

Or, $$\text{Pitch of rivets} = 3{\cdot}333 \times \text{diameter}.$$

$$\text{Also, } 2 \times \frac{\pi d^2}{4} = \frac{70}{100} p \times t;$$

whence, substituting the above value of p,

$$\text{Diameter of rivet} = 1{\cdot}485 \times \text{thickness of plate}.$$

Example.—To find the pitch and diameter of the rivets for a lap joint, double-riveted; the plates being $\frac{3}{4}$-inch thick, and the strength of joint 72 per cent.

$$\text{Diameter of rivet} = 1{\cdot}485 \times \tfrac{3}{4}, \text{ or } 1{\cdot}114 \text{ inches}.$$
$$\text{Pitch of rivet} = 3{\cdot}333 \times 1{\cdot}114, \text{ or } 3{\cdot}71 \text{ inches}.$$

The following table gives the pitch, &c., as found in general practice:—

TABLE XXIII.—Lap Joints, Double-Riveted (Zigzag).

Thickness of Plate.	Diameter of Rivets.	Pitch of Rivets.	Breadth of Lap.	Percentage of	
				Plate.	Rivets.
$\frac{1}{2}$ inch,	$\frac{3}{4}$ inch,	$2\frac{1}{2}$ inches,	$3\frac{3}{4}$ inches,	70·	70·6
$\frac{9}{16}$,,	$\frac{7}{8}$,,	3 ,,	$4\frac{1}{4}$,,	70·	71·2
$\frac{5}{8}$,,	$\frac{7}{8}$,,	3 ,,	$4\frac{1}{4}$,,	70·	64·0
$\frac{11}{16}$,,	1 ,,	$3\frac{3}{8}$,,	$4\frac{3}{4}$,,	70·	67·7
$\frac{3}{4}$,,	$1\frac{1}{16}$,,	$3\frac{1}{2}$,,	$4\frac{3}{4}$,,	70·	66·0
$\frac{13}{16}$,,	$1\frac{1}{8}$,,	$3\frac{5}{8}$,,	$5\frac{1}{4}$,,	70·	65·2
$\frac{7}{8}$,,	$1\frac{1}{8}$,,	$3\frac{1}{2}$,,	$5\frac{1}{4}$,,	68·	65·0
$\frac{15}{16}$,,	$1\frac{1}{4}$,,	4 ,,	$5\frac{1}{2}$,,	69·	65·0
1 ,,	$1\frac{5}{16}$,,	4 ,,	$5\frac{1}{2}$,,	67·	67·5
$1\frac{1}{16}$,,	$1\frac{5}{16}$,,	4 ,,	$5\frac{1}{2}$,,	67·	63·7

It will be seen by the above, that when the plates exceed $\frac{15}{16}$, sufficient area of the rivets cannot be obtained without an excessive diameter.

(3.) *Lap joint and treble-riveted.*—To obtain sufficient rivet area with a lap joint when the plates are thick, three rows of rivets are necessary; the rivets are, in this case, also sometimes arranged on

the *chain* plan, but more generally they are zigzag. A strength* of joint of 72 per cent. can generally be obtained with a rivet area equal to that of the plate between the holes; hence

$$\text{Pitch of rivets} = 3{\cdot}57 \times \text{diameter.}$$

$$\text{Also, } 3\,\frac{\pi d^2}{4} = \frac{72}{100}\,p \times t;$$

whence substituting the above value of p,

$$\text{Diameter of rivet} = 1{\cdot}10 \times \text{thickness of plate.}$$

Example.—To find the pitch and diameter of the rivets for a treble-riveted lap joint, the plates being 1 inch thick.

$$\text{Diameter of rivets} = 1 \times 1{\cdot}10, \text{ or } 1{\cdot}1 \text{ inches.}$$

$$\text{Pitch of rivets} = 3{\cdot}57 \times 1{\cdot}10, \text{ or } 4{\cdot}0 \text{ inches nearly.}$$

The following table gives the pitch, &c., as found in general practice:—

TABLE XXIV.—Lap Joints, Treble-Riveted (Zigzag).

Thickness of Plate.	Diameter of Rivets.	Pitch of Rivets.	Breadth of Lap.	Percentage of	
				Plate.	Rivets.
$\frac{3}{4}$ inch,	$\frac{7}{8}$ inch,	$3\frac{1}{4}$ inches,	6 inches,	73·0	74·0
$\frac{13}{16}$,,	$\frac{15}{16}$,,	$3\frac{7}{16}$,,	$6\frac{3}{8}$,,	72·7	74·1
$\frac{7}{8}$,,	1 ,,	$3\frac{5}{8}$,,	$6\frac{3}{4}$,,	72·4	74·2
$\frac{15}{16}$,,	$1\frac{1}{16}$,,	$3\frac{7}{8}$,,	$7\frac{1}{8}$,,	72·5	73·2
1 ,,	$1\frac{1}{8}$,,	$4\frac{1}{8}$,,	$7\frac{5}{8}$,,	72·7	72·2
$1\frac{1}{16}$,,	$1\frac{3}{16}$,,	$4\frac{1}{4}$,,	8 ,,	72·0	73·5
$1\frac{1}{8}$,,	$1\frac{1}{4}$,,	$4\frac{1}{2}$,,	$8\frac{1}{2}$,,	72·2	72·7
$1\frac{3}{16}$,,	$1\frac{1}{4}$,,	$4\frac{5}{16}$,,	$8\frac{3}{8}$,,	71·0	71·8
$1\frac{1}{4}$,,	$1\frac{5}{16}$,,	$4\frac{1}{2}$,,	$8\frac{3}{4}$,,	71·0	72·1

The chief difficulty with lap joints is in the working of the corners of the plates where the next strake of plating covers the lap; these corners are hammered to a taper, so as to nearly conform to a circle, and the covering plate is slightly joggled, so as to lie evenly on the deformation caused by the lapping. Some boiler-makers, to ensure a good fit, go to the expense of planing the corners fair, and even to extend the taper part beyond the butt end of the plate itself, so as to cause as little deformation as possible.

(4.) *Butt joints with double straps and single-riveted.*—This form of joint is not often resorted to, as there are two rows of rivets, and only a shearing area of twice that of the one row of rivets, besides

* By arranging the rivets so that there is half the number in each edge-row that there is in the middle-row, the strength of joint may be as much as 85 per cent.

all the expense of double straps, which entail the caulking of four seams; the sole advantage it possesses over the double-riveted lap joint, is the absence of smithed corners, and that the plates lie wholly in the circle without deformation; this, however, does not compensate for the extra expense and the liability of leakage from the two extra seams.

The strength of this joint is seldom more than 65 per cent. of the solid plate, as more cannot be obtained without placing the rivets so far apart as to prevent the straps from being caulked tight. If the straps are made of *the same thickness as the plate itself*, 70 per cent. may be obtained. Taking 70 per cent. as the strength of joint, the diameter and pitch of the rivets are the same as given for the double-riveted joint, and the breadth of the lap is six times the diameter of the rivets. For example, if the plate is $\frac{3}{4}$-inch thick, the rivets should be $1\frac{1}{16}$ inches diameter, and $3\frac{1}{2}$ inches pitch, the breadth of lap being $6 \times \frac{3}{4}$, or $4\frac{1}{2}$ inches broad.

(5.) *Butt-joints with double straps and double-riveted.*—This is a very general and deservedly favourite form of joint for thick plates, and when well made gives every satisfaction. There is no necessity for smithing or machining the plates, nor of joggling the covering plate of the next strake, although some boiler-makers, to avoid the caulking of the ends of the strap where it butts against the next strake, thin down the end and notch out the covering plate, so as to lap over the strap. This makes a very good joint, but is somewhat expensive, and if the plates are properly fitted, there should be no need of such an elaboration.

For each portion of plate between the holes, there is a rivet area equal to four times the area of section of one rivet; but as practice has shown that this is not always *effective* area, the Board of Trade allow only $3\frac{1}{2}$ times the area of one rivet.

Under these circumstances the following rules hold good for a joint equal to 75 per cent. of solid plate.

$$\frac{\text{Pitch of rivets}}{\text{diameter}} = \frac{100}{100 - 75},$$

Or, Pitch of rivets $= 4 \times$ diameter.

$$\text{Also, since } 3\tfrac{1}{2} \times \frac{\pi d^2}{4} = \frac{75}{100} p \times t.$$

Diameter of rivets $= 1{\cdot}1 \times$ thickness of plate.

The thickness of each butt-strap must be at least $\frac{5}{8}$ that of the plate, and when the strap between contiguous strakes is simply butted against them, it is better to be of the same thickness as the plate.

Example.—To find the diameter, pitch of rivets, and thickness of straps for a butt-joint double-riveted, and equal to 75 per cent. of solid plate, whose thickness is 1 inch.

Diameter of rivets = 1 × 1·1, or 1·1 inches.
Pitch of rivets = 4 × 1·1, or 4·4 inches.

Thickness of long strap $\frac{5}{8}$ inch, and of short strap 1 inch if butted, and $\frac{5}{8}$ inch if fitted under the covering plates.

The following table gives the pitch, &c., as found in general practice:—

TABLE XXV.—Butt-Joints, Double Straps, Double-Riveted (Zigzag).

Thickness of Plate.	Diameter of Rivet.	Pitch of Rivets.	Breadth of Straps.	Thickness of Straps.	Percentage of	
					Plate.	Rivets.
$\frac{3}{4}$ inch,	$\frac{7}{8}$ inch,	$3\frac{1}{2}$ inches,	$8\frac{3}{4}$ inches,	$\frac{1}{2}$ inch,	75	80·1
$1\frac{3}{16}$,,	$1\frac{5}{16}$,,	$3\frac{3}{4}$,,	$9\frac{3}{8}$,,	$\frac{1}{2}$,,	75	79·2
$\frac{7}{8}$,,	1 ,,	4 ,,	10 ,,	$\frac{9}{16}$,,	75	78·5
$1\frac{5}{16}$,,	$1\frac{1}{16}$,,	$4\frac{1}{4}$,,	$10\frac{5}{8}$,,	$\frac{5}{8}$,,	75	77·8
1 ,,	$1\frac{1}{8}$,,	$4\frac{1}{2}$,,	$11\frac{1}{4}$,,	$\frac{5}{8}$,,	75	77·3
$1\frac{1}{16}$,,	$1\frac{3}{16}$,,	$4\frac{3}{4}$,,	$11\frac{7}{8}$,,	$\frac{11}{16}$,,	75	76·8
$1\frac{1}{8}$,,	$1\frac{1}{4}$,,	5 ,,	$12\frac{1}{2}$,,	$\frac{3}{4}$,,	75	76·3
$1\frac{3}{16}$,,	$1\frac{5}{16}$,,	$5\frac{1}{4}$,,	$13\frac{1}{8}$,,	$\frac{3}{4}$,,	75	75·9
$1\frac{1}{4}$,,	$1\frac{5}{16}$,,	$5\frac{1}{16}$,,	13 ,,	$\frac{13}{16}$,,	74	74·8

The Board of Trade based their calculations on an ultimate strain against shearing of rivet iron at 21 tons, or 47,000 pounds, and of rivet steel at 23 tons or 51,500 pounds. Experience has shown that that is as high as is prudent; for when steel is soft enough for rivets, its ultimate resistance to shearing is never above 23 tons per square inch. In consequence of this, the effective rivet area of a steel boiler must be $\frac{28}{23}$ of the area of plate between the holes.

(6.) *Butt-joints with double straps treble-riveted.*—This form has become a necessity, since very thick plates have been used for boiler-shells, in order to get an adequate sectional area of rivet; it also admits for the same reason of thinner plates being used when desired, so that when there are only a few butt-joints, it is really more economical to adopt this form of joint. In this case, for each portion of plate between the holes, there is a rivet area equal to six times the area of section of one rivet; but, as before, the Board of Trade only allows this as $5\frac{1}{4}$. The percentage of plate between the rivets is generally 80 per cent. with this type of joint; hence

$$\frac{\text{Pitch of rivets}}{\text{diameter}} = \frac{100}{100 - 80}$$

Or, Pitch of rivets = 5 × diameter

$$\text{Also, since } 5\tfrac{1}{4} \times \frac{\pi d^2}{4} = \frac{80}{100} p \times t;$$

$$\text{Diameter of rivets} = \frac{32}{33} \times t \text{ (if of iron).}$$

In practice, the rivets are never less in diameter than the thickness of the plate.

The following table gives the diameter, pitch, &c., as found in general practice with steel plates and rivets; the percentage of rivet area is large, but only as required to provide for 23 tons ultimate strength against 28 tons for the plate:—

TABLE XXV*a*.—Butt-Joints, Double Straps, Treble-Riveted (Zigzag).

Thickness of Plate.	Diameter of Rivet.	Pitch of Rivets.	Breadth of Straps.	Thickness of Straps.	Percentage of	
					Plate.	Rivets.
1 inch,	$1\frac{3}{16}$ inch,	6 inch,	1 — $6\frac{1}{4}$	$\frac{3}{4}$ inch,	80·2	96·9
$1\frac{1}{16}$,,	$1\frac{1}{4}$,,	$6\frac{1}{2}$,,	1 — 7	$\frac{13}{16}$,,	80·0	97·0
$1\frac{1}{8}$,,	$1\frac{5}{16}$,,	$6\frac{5}{16}$,,	1 — $7\frac{3}{4}$	$\frac{7}{8}$,,	79·2	99·0
$1\frac{3}{16}$,,	$1\frac{5}{16}$,,	$6\frac{3}{8}$,,	1 — 8	$\frac{15}{16}$,,	79·4	93·8
$1\frac{1}{4}$,,	$1\frac{3}{8}$,,	$6\frac{5}{8}$,,	1 — 9	$\frac{15}{16}$,,	79·2	94·0
$1\frac{5}{16}$,,	$1\frac{7}{16}$,,	$6\frac{7}{8}$,,	1 — $9\frac{3}{4}$	1 ,,	79·1	94·3
$1\frac{3}{8}$,,	$1\frac{1}{2}$,,	$7\frac{1}{4}$,,	1 — $10\frac{1}{2}$	$1\frac{1}{16}$,,	79·3	93·0
$1\frac{7}{16}$,,	$1\frac{9}{16}$,,	$7\frac{1}{2}$,,	1 — $11\frac{1}{4}$	$1\frac{1}{8}$,,	79·1	93·3
$1\frac{1}{2}$,,	$1\frac{5}{8}$,,	$7\frac{3}{4}$,,	2 — $0\frac{1}{4}$	$1\frac{1}{8}$,,	79·0	93·6

An improved form of treble-riveted joint is made by omitting alternate rivets in the outer rows. In this case, there are five rivets for each space in the outer row, and, allowing only $1\frac{3}{4}$ times for the double shear, there will be $1\frac{3}{4} \times 5$ times the area of one rivet for each space or $8\frac{3}{4}$. In this way a larger percentage of joint can be obtained, amounting in practice to about 84; hence

$$\frac{\text{Pitch of rivets in outer row}}{\text{diameter}} = \frac{100}{100 - 84}$$

$$\text{Pitch of rivets} = 6{\cdot}25 \times \text{diameter.}$$

$$\text{Also, since } 8\tfrac{3}{4} \times \frac{\pi d^2}{4} = \frac{84}{100} p \times t.$$

Diameter of rivet = 0·77 × t (if of iron);

" " = 0·9 × t (if of steel).

In practice, the rivets in this class of joint are of the same diameter as the thickness of plate.

The following table gives diameter, pitch, &c., as found in general practice with steel plates and rivets:—

TABLE XXV*b*.—Butt-Joints, Double Straps, Double-Riveted with every Alternate Rivet Omitted in Outer Row (Zigzag).

Thickness of Plate.	Diameter of Rivet.	Pitch of Rivets, Outer Row.	Breadth of Straps.	Thickness of Straps.	Percentage of	
					Plate.	Rivets.
1 inch,	1 inch,	$6\frac{3}{8}$ inch,	1 — $3\frac{1}{2}$	$\frac{13}{16}$ inch,	84·3	107
$1\frac{1}{16}$ "	$1\frac{1}{16}$ "	$6\frac{3}{4}$ "	1 — 4	$\frac{7}{8}$ "	84·2	108
$1\frac{1}{8}$ "	$1\frac{1}{8}$ "	$7\frac{1}{8}$ "	1 — $4\frac{1}{2}$	$\frac{7}{8}$ "	84·2	108·5
$1\frac{3}{16}$ "	$1\frac{3}{16}$ "	$7\frac{5}{8}$ "	1 — $5\frac{3}{4}$	$\frac{15}{16}$ "	84·4	110
$1\frac{1}{4}$ "	$1\frac{1}{4}$ "	$7\frac{5}{8}$ "	1 — $6\frac{1}{4}$	1 "	83·6	112
$1\frac{5}{16}$ "	$1\frac{5}{16}$ "	$7\frac{5}{8}$ "	1 — $6\frac{1}{2}$	$1\frac{1}{16}$ "	82·78	111
$1\frac{3}{8}$ "	$1\frac{3}{8}$ "	8 "	1 — $7\frac{1}{2}$	$1\frac{1}{8}$ "	82·8	118
$1\frac{7}{16}$ "	$1\frac{7}{16}$ "	8 "	1 — $8\frac{1}{4}$	$1\frac{3}{16}$ "	82	109
$1\frac{1}{2}$ "	$1\frac{1}{2}$ "	$8\frac{1}{2}$ "	1 — 9	$1\frac{1}{4}$ "	82·3	121

(7.) *Welded joints.*—To avoid all chances of a leakage from the longitudinal joints, some boiler-makers have welded the butts of the plates together. The Board of Trade allowed only 75 per cent. of solid plate as the value of this joint, and have now withdrawn their consent to this method altogether. Although it is quite possible to make a perfect weld, and it is often done in boiler-making, there is always some degree of uncertainty in the process, and no one can have confidence in what cannot be proved to be right. The goodness of this joint depends on the skill and care exercised by the workmen; and as an imperfection is easily covered and concealed, no one with a due sense of responsibility could accept such joints, unless made wholly under his personal inspection, and even then there is not that sense of security which is felt with a riveted joint.

Circumferential Seams are almost always lapped and double-riveted. Boilers of small size and for comparatively low-working pressures are single-riveted, and as one row of rivets is quite sufficient to ensure tightness of joint, which is all that is required in this joint, the single-riveted joint might be adopted more generally than now obtains. Boilers made for very high pressures are

often treble-riveted in the circumferential seams, the Board of Trade Rules admitting of a thinner plate when this is done.

Methods of Work.—Formerly the holes in boiler plates were punched and drifted fair; now drifting is forbidden by all good boiler-makers, and if the holes are unfair rimering is resorted to. Since the Board of Trade placed a premium on drilled holes, machines have been made which compete successfully, both in the cost and speed of the work, with the punching machine, and the whole of the holes in a boiler shell are drilled *in place* at a trifling expense beyond that of punching.

The longitudinal seams are now always drilled, and very generally the circumferential also. It is urged, with a great degree of truth, that the punching process found out bad plates, and caused the rivets to be tighter. There is little doubt that some of the iron used by some boiler-makers will not stand punching and rolling afterward, and it is only by rolling hot and drilling in place that the plates pass muster; but this is an exceptional state of things with marine engineers, who build under such close inspection. That in punching iron or steel the metal is injured, is beyond question, and for this reason the Board of Trade place the premium on drilling the holes. (See *Appendix.*)

All steel plates which have had holes punched in them are required to be annealed, but with the mild steel now made on the Siemens' system, there is little need of this precaution, indeed, there is more danger of damaging the plates by careless attempts at annealing than by deterioration of metal in the punching. The injurious effects of punching can be, to a very large extent, corrected by rimering the holes, hence it is the practice with some engineers to punch the holes $\frac{1}{16}$ inch less in diameter than required, and after putting the shell together to place it on the machine, and run a drill of the right diameter quickly through so as to rimer them fair. When steel plates have been punched, it is a very common practice to trust to the annealing effected by making them cherry red hot for the purpose of rolling them to the circular form. If steel plates are to be drilled they may be rolled to the circular form cold, provided the rolls are sufficiently powerful for this purpose.

Material.—The shell plating of a cylindrical boiler, when made of iron, was usually of the quality known as "Best Staffordshire;" that is, the iron is supposed to have a tensile strength with the grain of about 48,000 pounds per square inch, and to be equal in all other respects to Staffordshire boiler plates branded as Best. Sometimes, in special cases, "Best Best" plates were used for this purpose; but as there is no very material gain in tensile strength, and as superior ductility is of no particular advantage for this purpose, there is little advantage in using this quality of iron. It may, however, be mentioned in passing that the "Best" plates of one maker may be and often were superior to the "Best Best" of another maker. In selecting plates for a cylindrical shell, it was necessary to

bear in mind that tensile strength and moderate elasticity are the two qualities requisite, but as the Board of Trade, Lloyd's, and others only supposed the ultimate strength to be 47,000 pounds, and insist on a high factor of safety, there was no encouragement to use iron of a high quality.

The chief obstacle to marine boiler-makers using real Staffordshire plates, was that the older mills were incapable of turning out large heavy plates, while some of the Sheffield manufacturers can roll plates up to 9 feet wide and to 50 feet long, with a thickness of $1\frac{1}{4}$ inch. The makers of best Yorkshire iron can also roll equally large plates, but of less thickness. The Sheffield plates were made from Staffordshire iron generally, and if any admixture was made it was with the idea of improving the iron, so that these brands were quite as reliable as were those of the older Staffordshire houses.

Siemens' steel has now taken the place of iron in boiler-making, and as it possess a much higher tensile strength, together with greater elasticity, it is a more suitable material for the purpose. A boiler made wholly of steel is also cheaper than one made wholly of iron, which no doubt was one cause of the increased demand for steel boilers. Steel plates can, at a trifling extra expense, be supplied of very large sizes, equalling those made by the Yorkshire ironmasters in magnitude at a much higher cost. As a matter of fact, the overhead price of a heavy specification of steel plates is generally very nearly the same as that of a light specification, while there is a very considerable difference for iron if large and heavy plates are included. Nowadays the size of plates to be used in the construction of the shell depends on the appliances of the boiler-maker; the breadth of plate is limited by the depth of gap in the riveting machine, and the length of plate by the capabilities of the planing machine and rolls; and the weight of the plate is limited to the strength of the various small cranes, &c. Unless a boiler shop had been recently supplied with new machinery and plant, 4 feet 6 inches was the limit of breadth of plate; few planing machines were made for a cut exceeding 18 feet, but if so arranged, they could take plates of any length, and plane the edges at two settings. If a plate exceeds 40 cwts., it is very awkward to handle, and the gain by the saving of seams is lost in the extra labour involved in plating. Now rolls and riveting machines can take plates 10 feet wide.

When the machinery admits of it, a single-ended boiler should have one or two drums or strakes of plating, each strake consisting of two plates; a double-ended boiler should have three strakes of plating: the longitudinal seams should be so arranged that no two of them come in line, nor interfere with the seams at the ends.

Allowance for Wear.—All boilers are designed so as to last as long as possible, and since wear takes place by corrosion, some additional thickness must be provided at first to meet this condition, The Board of Trade claim to make this allowance by using a high

factor of safety; but since the factor of safety causes the additional thickness to be *proportional to the total thickness*, while the wear takes place independently of thickness, it does not meet the case. A boiler with plates $\frac{1}{2}$ inch thick will waste the same quantity of iron per square foot as one with plates 1 inch thick if worked under similar conditions. Suppose such waste to be $\frac{1}{8}$ inch in a certain time, the loss in one case is 25 per cent., and only $12\frac{1}{2}$ per cent. in the other. To meet the case properly the factor of safety should be reduced, and a constant quantity added; for example, in the case mentioned above the plates should be $\frac{9}{16}$ inch and 1 inch, so that at the end of the time the former should be $12\frac{1}{2}$ per cent. under $\frac{1}{2}$ inch in thickness. If any further proof be needed, it is only necessary to calculate the thickness of plates for boilers of small diameter and low pressure, to find it such as would be impossible to rivet and caulk tight.

The following rules make due allowance for such contingencies: —Let D be the diameter of the shell in inches, p the working pressure in pounds per square inch, F a factor; then

$$\text{Thickness of shell plate} = \frac{D \times p}{F} + \tfrac{1}{8} \text{ inch.}$$

The following are the values of F:—

Description of Joint.	Iron.	Steel.
Lap joints, single-riveted, ...	11,000	13,700
,, ,, double- ,, ...	14,000	17,500
,, ,, treble- ,, ...	14,500	18,100
Butt ,, double- ,, double straps, .	15,000	18,700
,, ,, treble- ,, ,, .	17,500	21,800

Example I.—To find the thickness of iron plates for a boiler shell 8 feet 4 inches diameter for a working pressure of 40 lbs., single-riveted.

$$\text{Thickness} = \frac{100 \times 40}{11{,}000} + \tfrac{1}{8} \text{ inch} = \tfrac{1}{2} \text{ inch nearly.}$$

Example II.—To find the thickness of steel plates for a boiler shell 15 feet diameter for a working pressure of 160 lbs., treble-riveted.

$$\text{Thickness} = \frac{180 \times 160}{21{,}800} + \tfrac{1}{8} \text{ inch} = 1\tfrac{7}{16} \text{ inch.}$$

Lloyd's Rules (see *Appendix*) are arbitrary with a view to provide such an allowance as indicated.

Boiler Ends.—There are several methods of connecting the end-plates to the shell—

(1.) *By means of angle irons.*—This is the oldest method, and copied from the practice of makers of land boilers. It was the cheapest when there were no special appliances for flanging, and also because it admitted of the end-plates being of an inferior quality of iron compared with what is necessary when required to be flanged; but there are double the number of rows of rivets and caulking edges from which leakage may take place, and the angle iron is not well calculated to withstand the strains. From a constructive point of view, this plan has special advantages, for when the angle iron is external (fig. 120) there is more room on the boiler front for the furnace mouths, man-holes, mountings, &c.; and with the angle iron the lapping of the end-plates does not tend to cause leakage at the corners, and altogether the work on it is of a simpler nature. For single-ended boilers the back angle-iron internal (fig. 121) and the front external (fig. 120) made a very good arrangement.

(2.) *Flanging the end-plates.*—This is the commonest and, on the whole, the best plan, for there are only one set of rivets and two caulking edges, and the room occupied is less than with the external angles. Flanging is now generally done by special appliances at a trifling cost, and where steel is used the cost of material is outside the question. The flanges (fig. 123) are usually inside the boiler, but when it is of so small a size that the rivets cannot be held up inside, the *front* end is placed (fig. 124) with the flange outside. In either way there is no tendency to force the joint by pressure on the ends, as there is with angle irons.

(3.) *Flanging the shell plates.*—Some few engineers, in order that a thicker plate may be provided to withstand the wear that takes place at the bottom corners, or rather edges, of the cylindrical boiler, flange the shell plates (fig. 125) inwards, so as to form a connection for the ends. This has many bad features, among which may be cited the difficulty and cost of flanging thick iron plates across the grain, especially after being bent; the necessity for such shell plates to be of low tenacity to have so much ductility; and lastly, the pressure on the end always tending to open the joints. It has, however, some of the advantages of the angle irons, but this advantage is dearly bought, for to avoid the chance of leakage at the corners of the end-plates, there is far greater risk of leakage from the longitudinal shell joints, which are of necessity flanged over too; also, such an arrangement quite prevents the furnaces from being near the shell.

Riveting.—The cross seams of the backs are usually double-riveted, although for moderate pressures single-riveting does quite well. The riveting of the ends to the shell is usually of the same design as that of the other circumferential seams.

The Quality of Plate, when of iron, depends largely on the amount of flanging to be done. To stand flanging around the edges of the circular plates they were of "best best" quality; when the furnace

holes are flanged to meet the furnaces a better quality still was necessary, and few qualities beyond the best Yorkshire kinds would stand such severe treatment. Steel, which is almost invariably used now, may be flanged in this way with impunity.

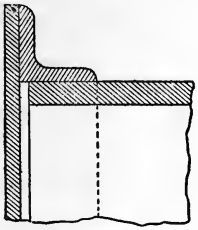

Fig. 120.

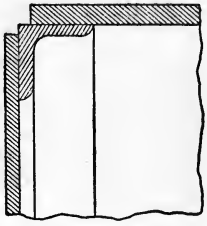

Fig. 121.

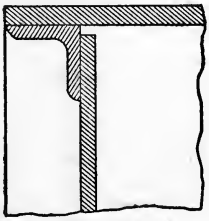

Fig. 122.

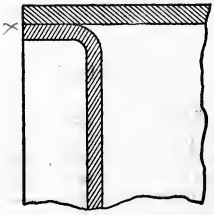

Fig. 124.

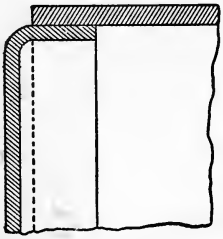

Fig. 123.

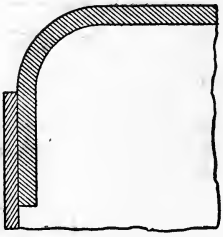

Fig. 125.

Figs. 120 to 125.—Boiler Ends.

The Thickness of the End-Plates and the pitch of the stays are interdependent to a certain extent; but since the stays in the upper part of the boiler must be wide enough apart to admit of a man passing between them, the plates at the upper part of the ends must be made thick enough to suit this pitch of the stays, which are usually in consequence somewhat thicker than the

other part of the ends; some makers, however, prefer to make the ends of one uniform thickness, and stiffen the top plates to stand the wide pitch of the stays by riveting on thick and large washers in wake of these stays. The end-plates are generally from $\frac{9}{16}$ to $\frac{3}{4}$ inch thick, although a few makers prefer to have thicker plates, so as to avoid the necessity for doubling plates about the man- and mud-holes, and for fitting nuts and washers to the screwed stays.

Furnaces.—Those fitted in the cylindrical boiler are invariably of circular section, that being the best form to resist a uniform external pressure. The strength of such a furnace varies as the square of the thickness of plate, and inversely as the diameter and length. From experiments made on a large scale, there is reason to doubt the supposition that the strength varies *exactly* inversely as the length.

Let D be the external diameter, in inches, of the furnace, whose length is L feet; t the thickness of the plates in parts of an inch.

$$\text{Safe working pressure} = \frac{90{,}000 \times t^2}{(L + 1) \times D} \text{ (Board of Trade);}$$

Or,

$$\text{Safe working pressure} = \frac{89{,}600 \times t^2}{L \times D} \text{ (Lloyd's Registry).}$$

If the furnaces are constructed by welding the plates together, or connecting them by a butt joint with double straps single-riveted, or by a single butt strap double-riveted, the Board of Trade allow the above factor. If, however, the joints are lapped and double-riveted and bevelled, so as to be in one circle, 80,000 is allowed when the holes are drilled, and 75,000 when punched; if not bevelled, 75,000 and 70,000; if only single-riveted, but bevelled, 70,000 and 65,000. To avoid making from the above rules a furnace which might give way by the crushing of the material, the Board of Trade insist that, in no case shall the working pressure, in pounds per square inch, exceed $\frac{9{,}000 \times t}{D}$, and Lloyd's that the working pressure shall not exceed $\frac{8{,}000 \times t}{D}$ for iron or steel plates under $\frac{9}{16}$ inch, and in case of steel plates over $\frac{9}{16}$ inch $\frac{8{,}800 \times t}{D}$.

The following rule gives a suitable thickness for the furnace plates, in 32nds of an inch, and makes *due allowance for uniform wear of the surfaces.*

$$t = \sqrt{\frac{p \times L \times D}{F}} + 2.$$

Here L is the length, and D the diameter, *both in inches;* and F a factor which, for iron, is 900, and for steel, 1000.

When the furnaces are made of steel, the Board of Trade allow an increase of 10 per cent. on all the factors given above; while Lloyd's put no such premium on the use of steel, but require the same scantlings in furnace as if of iron, except in Rule III.

Furnace plates are made from $\frac{5}{8}$ inch to $\frac{3}{4}$ inch thick, the most general sizes being $\frac{7}{16}$ to $\frac{9}{16}$ inch; when possible, $\frac{1}{2}$ inch should

not be exceeded, as there is a strong tendency to burn down to that thickness if the plates are made thicker. Some engineers, however, in spite of this, to avoid stiffening rings, make the furnace of plates as thick as $\frac{7}{8}$-inch; if the boiler is kept quite clean, this may do.

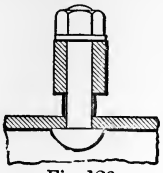

Fig. 126.

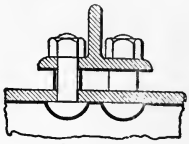

Fig. 127.

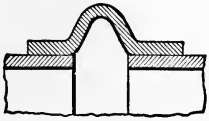

Fig. 128.

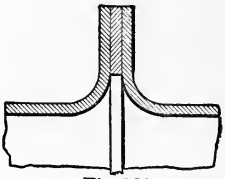

Fig. 129.

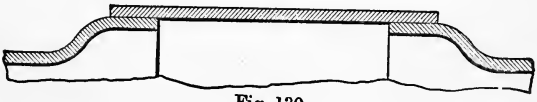

Fig. 130.

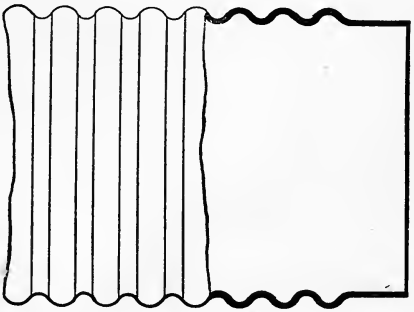

Fig. 131.—Fox's Furnace.

If the furnace is so long that $\frac{9}{16}$-inch plates are insufficient by the rules for the working pressure, some means of stiffening it should be resorted to; such stiffening was generally effected by means of rings secured to the plates, and as the effective length for purposes of calculation is thus virtually the longest distance between such rings, or between such rings and the ends, it may be taken as the value of L in the foregoing formulæ.

The Methods of Stiffening Furnaces are—(1.) *By means of a hoop* (fig. 126) formed of two flat bar rings riveted together, parallel with one another, and at a sufficient distance apart to admit of a stud passing between them. The furnace is held to this hoop by means of studs screwed into it, and, passing between the rings, fitted with nuts and washers. This is a cheap plan, and a very convenient one for stiffening an existing furnace; as is also the following:—

(2.) *By means of a hoop* (fig. 127) formed of two angle-iron rings riveted together; the furnace is held to it by studs screwed into it, and, passing either between the angles or through the flanges, fitted with nuts, &c.; when passing through the flanges, it is usual to fit a thimble to each stud.

(3.) *By making the furnace in two or more drums, and connecting them by means of a U-shaped hoop*, called the "Bowling hoop" (fig. 128), because first made by the Bowling Iron Company. These hoops are weldless, and possess a considerable amount of elasticity; so that, in addition to stiffening, they allow expansion longitudinally on the part of the furnace. This is a very convenient plan, as it admits of the furnace being partially withdrawn in case of damage, &c.; and notwithstanding that there are two thicknesses of plates, and two laps at each joint of the furnace, it gives every satisfaction when tried.

(4.) *By making the furnace in two or more drums, and connecting them by means of flanges*, formed by turning the plate end outwards (fig. 129). To allow of a caulking edge on both sides of the lap, a thin ring is introduced between the flanges. This was a favourite method, because no joint or riveting is exposed to the fire; but it is expensive, and requires care both in the flanging and in the fitting together to avoid trouble. Such joints generally give trouble from the strain on the boiler end tending to open the joint, and by the wearing away of the metal at the root of the flanges. Furnaces made on this plan also require more room in the boiler, and the flanges block up the space between them and the boiler shell.

(5.) *By making the furnace in two or more drums of different diameters;* those of small diameter are flanged out so as to fit into, and be connected to, the larger ones with lap joints single-riveted (fig. 130). This is known as Hawkesley's patent; and, although successfully applied to land boilers, has, so far, only been tried on a small scale in marine boilers. It possesses one or two very useful features, among which may be reckoned the capability of the furnace, being small at the mouth, to leave good space on the boiler fronts for man-holes, &c., and while small at the combustion-chamber ends, it is of good diameter in the middle. It has, however, the objection of presenting joints to the direct action of the fire.

(6.) *By making the furnace with a series of corrugations or ridges.*—There are now several ways of accomplishing this, the best known being that of Mr. Fox (fig. 131), as made by the Leeds Forge Co., and that of Mr. Purves (fig. 132), made by John Brown & Co. of Sheffield. A more recent patent is that of Mr. Morison (fig. 133), and made by the Leeds Forge Co., this form possesses the good

features of the Purves, and avoids the fault of the Fox. Fig. 134 is the form of furnace made by C. D. Holmes & Co., Hull.

The corrugated furnace is an extension of the Bowling-hoop principle, and its genesis is best illustrated by reference to fig. 134, which shows the plan followed by Mr. Holmes. Here there are comparatively few corrugations, but still sufficient to give the necessary stiffness to the furnace. For increased pressure, such a furnace as this must either be made of thicker plate, or have the corrugations closer together; consequently, for the same pressure and dimensions the Fox furnace will be thinner than that of Mr. Holmes. On the other hand, the Holmes furnace is more rigid longitudinally than the Fox furnace. The corrugated furnace made by the Farnley Co. has the corrugations formed spirally around the furnace, and are said thereby to give greater longitudinal rigidity, without sacrificing too much of its transverse stiffness; there must, however, be set up twisting strains when end-pressure is applied, which would tend to shear the rivets, and the transverse stiffness cannot be any more than that of the Holmes furnace.

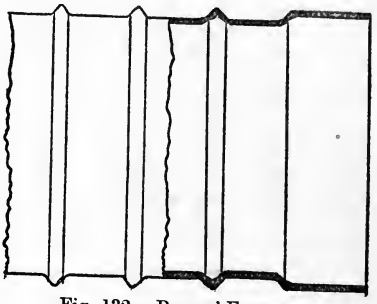

Fig. 132.—Purves' Furnace.

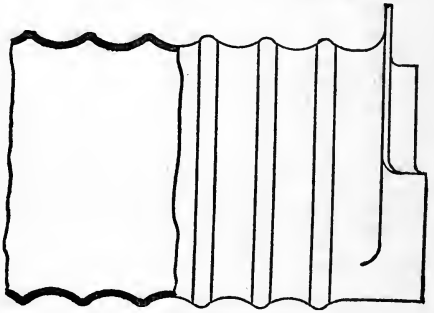

Fig. 133.—Morison's Furnace.

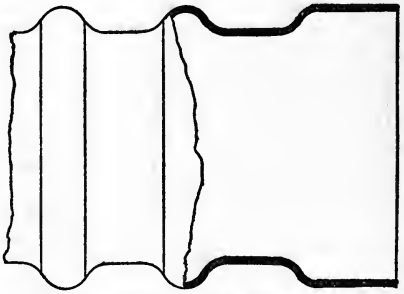

Fig. 134.—Holmes' Furnace.

These furnaces have become a necessity for large diameters and high pressures; but although immensely strong so long as the metal is cold, corrugated ones will probably collapse *longitudinally* when red hot quicker than an ordinary furnace, from the fact of there

being superabundance of plate between the extreme points of support to supply the extra length of the arc over that of the chord; a common furnace cannot come down in this way without stretching the metal; in the Fox's furnace the corrugations are simply drawn out of shape. For this form the Board of Trade allow the limit of working pressure in lbs. per sq. in. to be $\frac{14{,}000 \times t}{D}$, D being in this case the outside diameter measured at the bottom of corrugations. It is claimed for it that the evaporative power is higher than that of the common form; this is quite possible, and is due to the larger surface presented. The chief objection to this form beyond that of cost, which is hardly worthy of consideration, is the difficulty of cleaning it from scale, which is very liable to form at the bottom of the corrugations, and as the inside of that part is most exposed to the direct action of the fire, unless kept clean there is danger of burning the metal. It is also urged, that in case of damage, it will be most difficult to repair such a furnace.*

The Purves furnace is an extension of the Adamson-joint principle, and is shown in fig. 132. This furnace is said to possess quite as much transverse stiffness as the Fox, while possessing superior longitudinal rigidity; it is, moreover, easier to clean and to repair. For this form the Board of Trade allow the limit of working pressure in lbs. per sq. in. to be $\frac{14{,}000 \times t}{D}$, D being in this case as the outside diameter of the plain part.

For the Morison furnace the Board of Trade allow the working pressure to be $\frac{13{,}500 \times t}{D}$.

Methods of Connecting Furnaces to End Plates.—There are three distinct ways of accomplishing this.

(1.) *By means of angle-iron rings* (fig. 135) outside of the furnace, and either inside or outside of the boiler end, and in some rare cases inside the furnace and inside the end. This is the older method, and copied from the practice of the land boiler-makers. It is a very cheap method, and a convenient one, when expert smiths cannot be obtained, or when the plates are not soft enough to stand flanging; but there is always an objection to strain angle-iron across the grain, and two rows of rivets, and four caulking edges, are never so good as half that number.

(2.) *By flanging the furnace to meet the front* (fig. 136).—This is a great improvement on the angle-irons, as it avoids the two chief defects of that system, but still retains one—viz., that the pressure on the ends tends to open the joint. The flanging is invariably outwards, and the root should have good curvature, the radius of the outer surface being at least 1½ inches.

(3.) *By flanging the front plate* inwards (fig. 137) or outwards

* Experience, however, has proved that, when ordinary precautions are taken, these fears are groundless, and this has given such confidence that few engineers now hesitate to use them.

(fig. 138) to meet the furnace. The former is the most general method, the latter being resorted to only when the boiler is so small as to prevent the rivets from being properly "held up." This makes the best finish to the boiler front, and leaves more room for man- and mud-holes, &c., but an iron plate must be of exceedingly good quality to stand this kind of flanging; steel

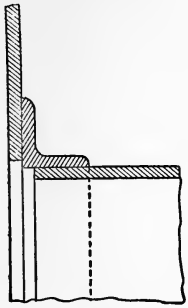

Fig. 135.

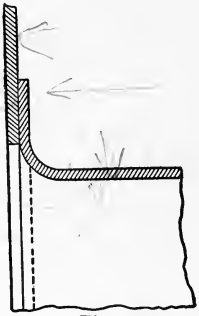

Fig. 136.

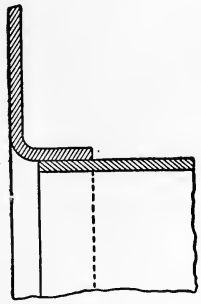

Fig. 137.

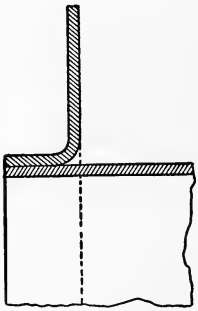

Fig. 138.

Figs. 135 to 138.—Furnace Ends.

can be flanged inwards with impunity, and consequently steel boilers are generally made this way. The joint (fig. 137) is capable of being caulked at both edges, and the strain on it is across the rivets, and does not in consequence tend to start the caulking.

Materials for Furnaces.—In an iron boiler, the plates exposed to the direct action of flame were usually of best Yorkshire iron, known commercially as *Lowmoor quality iron*, which is made by a few firms in the neighbourhood of Bradford and Leeds from special iron. The top plates of the furnaces were of this quality, and the joints were at least 3 inches below the level of the bars; the bottom plates may be, and usually were of B.B. Staffordshire

quality; to allow for the more rapid waste which takes place in that part, the bottom plate was made $\frac{1}{16}$ to $\frac{1}{8}$ inch thicker than the top when they are welded together, or connected by a lap-joint; when the joint is a butted one, this is not feasible. As steel is now almost always employed, it is a common practice to make the furnace in one plate, the quality of which differs from that of shell plating. For the inside of the boiler, a softer steel is preferable, because it is easier to work, has a greater elasticity, and is less liable to be affected by heat; 30 tons per square inch is the limit placed by the Board of Trade as the ultimate tensile strength per square inch for such steel. The Admiralty allow a limit of 27 tons.

Longitudinal Joints of Furnaces.—The plates are better joined by welding, where there are men capable of doing the work. With proper appliances there is little difficulty in performing this operation, and with practice the men become very expert and sure of their work. There are two methods of effecting the weld, the one consisting in turning the edges up after slightly "upsetting" them, bringing them closely together over a strong flame till raised to a welding heat, when they are hammered down flat on a suitable anvil, placed inside the furnace; the other method is preferable, when the plates to be joined are of the same quality, as it consists of inserting a bar between the two edges which have been previously "upset" and bevelled, the plates and bar being raised to the welding heat in a separate fire. Steel of special section is often used now to form the "glut" and preserve an uniform thickness. If the plates are connected by a riveted joint, there is a great advantage in welding the end of the joint, so that no leakage may occur from it where it joins the combustion chamber and boiler end.

The next best form of joint for furnaces is the butt with double straps and single riveted, and this was the one adopted when steel was first employed. Steel can be easily welded by expert smiths, and it is seldom damaged in the process, but when it is, and tested, gives way generally just outside the weld. When connected by butt straps, the steel plates may be welded at the ends of the joint as recommended for iron; but steel furnaces are now always welded.

Combustion Chambers.—The length of a combustion chamber measured in line with the furnace should be such that its capacity above the level of the fire-bars is equal to the total capacity of the furnace, when the boiler is single-ended; when double-ended and one combustion chamber is common to opposite furnaces, the capacity of the combustion chamber should be equal to three-fourths of the combined total capacity of the two furnaces.

To obtain such a capacity of combustion chamber when the boiler is single-ended, or double-ended and divided transversely, the length must be about two-thirds the diameter of the furnace, and when common to two opposite furnaces, it must be nearly equal the diameter of furnaces.

Combustion chambers are sometimes formed with flat tops (fig. 106),

and sometimes by curving the back plate over the top to meet the flange of the tube plate (fig. 109). The latter plan avoids the necessity of the girder stays required to stay the flat top, and reduces the number of joints of plating, but the capacity of the combustion chamber is less, and the space for tubing, &c., contracted. It is often claimed for this form that staying is avoided, but this is not a substantial gain, as in a single-ended boiler the stays which are necessary for the back end plates form the stays of the chamber, and in a double-ended boiler if stays are omitted between the chambers, the Board of Trade surveyors require additional staying in the steam space *to tie the ends of the boiler together.*

The thickness of plates and pitch of stays are of course interdependent, but as a rule, the chambers of large boilers whose working pressure is 70 lbs. per square inch and upwards, are made of $\frac{1}{2}$ inch plates, and those of smaller boilers, or those working at lower pressures, are made of $\frac{7}{16}$ inch plates.

The combustion chamber of boilers whose working pressure does not exceed 30 pounds per square inch, is usually made of $\frac{3}{8}$ inch plates, except in the parts subject to exceptional wear, which should be $\frac{7}{16}$ inch, and even $\frac{1}{2}$ inch: this of course applies to the chamber of box boilers, as well as those of cylinder boilers.

The bottom of the chambers should be $\frac{1}{16}$ to $\frac{1}{8}$ inch thicker than the sides, as from various causes there is often rapid wear in that part; also to avoid excessive staying, and to provide for burning, which sometimes takes place there, the plates at the top should be $\frac{1}{16}$ inch thicker.

The back tube plates vary in thickness from $\frac{9}{16}$ in small boilers, and in boilers for low pressures to $\frac{3}{4}$ inch, and even $\frac{7}{8}$ inch in large ones for high pressures. Generally in modern boilers of ordinary sizes and pressures, the back tube plate is $\frac{5}{8}$ to $\frac{3}{4}$ inch thick, the former being the best size when possible, as with it the tubes can be made quite tight, and there is less liability of cracking the plates, or burning the tube ends than with the thicker plates.

The whole of the plates of the combustion chamber which are exposed to the action of flame should be, when of iron, of the "Lowmoor" quality; those plates which are below the level of the bridges may be of "Staffordshire" quality. The back plate and tube plate of the combustion chamber are almost invariably flanged inwards to take the side plates and those on the top and bottom; some makers have tried to make the chambers by flanging the sides top and bottom to meet the back and tube plates; but as this is very troublesome to effect, and prevents the tubes from being extended to the sides and top, it is seldom followed. The flange of the top plate of the furnace should be inside the chamber, and connected to the tube plate with counter-sunk rivets; the landing edge is then turned away from the "wash" of the flame, and no rivet heads are exposed to it. The landing edges of all joints of plating exposed to water should be downwards, so that deposit cannot lodge on them; when they are upwards on the water side the deposit on them is very consider-

able, and it is found that rapid corrosion then takes place in the angle beneath it.

Tubes.—The tubes in the ordinary marine boiler are from $2\frac{1}{2}$ inches to 4 inches external diameter, the usual sizes being from 3 inches to $3\frac{3}{4}$ inches in the mercantile marine, and $2\frac{1}{2}$ inches to 3 inches in H.M. Navy. With the ordinary natural draught the tubes should not be more than 24 diameters long; with the forced draught they may be as much as 60 diameters long, as in a locomotive boiler, but the practice in torpedo boats and steam launches is to make the tubes about 35 diameters long. The length, however, does not matter so much with forced draught.

The spacing of the tubes often depends on circumstances, but in the mercantile marine, where space and weight of machinery are not of such moment as in the Navy, the pitch of the tubes is usually 1·4 × diameter. There is less liability to prime when the tubes are widely spaced, and they are more easily cleaned from scale. For the latter purpose they are arranged in rows, both horizontally and vertically, and not zigzag, as often seen in locomotive boilers.

Tubes are manufactured of a certain minimum thickness, and said to be "according to list" when so made. If the pressure they are intended to withstand does not exceed 40 pounds, they may be "according to list;" if it does not exceed 90 pounds, they should be "1 gauge thicker than the list;" if the pressure exceeds 90 pounds, the tubes should be "2 gauges thicker than list."

The following table gives the thickness under the various circumstances, in the numbers of the Birmingham wire gauge:—

TABLE XXVI.

External diameter of tubes, .	2	$2\frac{1}{4}$	$2\frac{1}{2}$	$2\frac{3}{4}$	3	$3\frac{1}{4}$	$3\frac{1}{2}$	$3\frac{3}{4}$	4
List or thickness for 40 lbs., .	12	12	11	11	11	10	10	10	9
Thickness for under 90 lbs., .	11	11	10	10	10	9	9	9	8
Thickness for over 90 lbs.,. .	11	10	9	9	9	8	8	8	7

It is usual to make the tubes of slightly larger ($\frac{1}{16}$ to $\frac{1}{8}$ inch) diameter at their front end, so as to draw out easily when once started from the plates. Tube manufacturers will swell the ends to $\frac{1}{16}$ inch larger diameter without extra cost.

Boiler tubes are made of iron, steel, and brass; when of iron or steel they are manufactured from strips of the best Staffordshire iron, *lap* welded; when of brass they are usually "solid drawn," and consequently without a joint. Solid drawn steel tubes can also be obtained.

Iron tubes are almost always used in the mercantile marine; brass tubes are used in the Navy,* partly because of their superior conducting power, but chiefly on account of their endurance and reliability, as iron tubes seldom last more than four years, will sometimes last only as many months, and after only as many days a few will sometimes prove defective from small holes being formed, which rapidly enlarge with the rush of water and steam through them.

Brass tubes are made of a composition of 68 per cent. of B.S. copper and 32 per cent. of spelter, which, when drawn out into the tube, has a very high tensile strength, and is very tough. Such tubes will last ten or twelve years under ordinary circumstances, but if used with coal containing much sulphur they perish more rapidly, and lose the toughness. They cost about four times the price of iron tubes, but when condemned are worth about half the original cost, and since they last at least double the time, and their superior efficiency is a sufficient set-off for interest on capital, the brass tubes are more economical than the iron ones. The chief objection, however, is still a financial one, as the prime cost is higher, and insurance, &c., depends on it as well, although underwriters could really well afford to make a reduction in premium for brass tubes as compared with iron ones.

Steel tubes are now being used, and will no doubt eventually be employed on a large scale; but the early experience with this metal for tubes is no more happy than that of some few engineers with it for boiler plates; there is steel and steel, and because tubes of that material failed egregiously many years ago, it is no reason why tubes made of modern steel should not be used now, especially in steel boilers. The Admiralty use steel tubes very extensively.

To preserve the ends of the brass tubes in the back tube plate from being wasted away, the Admiralty direct that iron ferrules are to be fitted to them. These ferrules are made of malleable cast iron; they have a slight taper and a small flange, so that when driven home they are very tight, and protect the end of the tube completely.

Stay Tubes.—The tube plates are usually held and stiffened by some of the tubes of greater thickness being arranged as stays; for that purpose they are screwed at the ends with a fine thread (10 to 12 threads per inch), and either tapped into both plates, or tapped into the back plate, and screwed by nuts to the front plate. The better plan is the former, the back end thread is *minus*, and the front end *plus*, and the tube screwed into both plates at the same time. The section of thread in this plan is in excess of that of the tube owing to its large diameter, and the tube can be withdrawn at any time without disturbing the others. If fitted with nuts there is great difficulty in getting the tube out, generally necessitating the withdrawal of a whole row, while there is really no difficulty in tapping the holes, and no necessity for nuts.

Stay tubes are usually $\frac{1}{4}$-inch thick in the body, and as the thread is $\frac{1}{16}$-inch deep, it is only $\frac{3}{16}$-inch thick at the bottom of thread. Some makers prefer to fit thicker tubes, and space them farther apart. For 80 pounds working pressure and upwards, the

* Since the introduction of forced draught the use of brass tubes has been discontinued.

stay tubes being $\frac{1}{4}$-inch thick, each alternate tube should be a stay tube; that is, in a nest of, say, 64 tubes, there will be 16 stay tubes.

Stay tubes generally outlast two sets of the ordinary tubes.

Stays.—Flat surfaces have to be stiffened and tied together by bars called *stays*. When the plate surfaces are close together, and comparatively thin, so that the stays are short and numerous, they are screwed into both plates, and the ends either riveted over, or fitted with lock nuts; such stays are usually called "screwed stays." As has been said, the thickness of plates and pitch of stays is interdependent. The size and number of the stays depend on the pressure they have to withstand. The stays in the steam space must be so spaced that a man can pass between them, and for this purpose they should never be nearer than 14 inches, centre to centre, and are usually 15 to 17 inches centres, which gives a clear space of 12 to 14 inches between them. These stays are seldom more than $2\frac{1}{2}$ inches effective diameter, and as the exact spacing of them depends on the form and size of the boiler, they are generally arranged to suit the particular case, and the diameter varied to give a section adequate to the load each has to bear. To admit of easy access, these stays are arranged in horizontal and vertical rows as nearly as possible.

The Admiralty allow a strain of 18,000 lbs. per square inch of effective area of stay when at the test pressure, which is usually 90 lbs. above the working pressure. If the stays are below $1\frac{1}{2}$ inches diameter only 16,000 lbs.

The Board of Trade.—For Rules in force (1890) see footnote.*

Lloyd's Registry.—For Rules in force (1890) see footnote.†

When of iron, the large stays are often made with a *plus* thread; this necessitates making the ends separate, and welding them to the body, which is of somewhat smaller diameter than at the bottom of thread of the ends. This is a somewhat expensive process, and, as it involves two welds, is not so reliable as simply screwing a rolled bar with a *minus* thread at each end. The latter plan, especially since the making of steel boilers has become general, is now fast taking the place of the former; it has, too, the advantage of excess of section in the body where most corrosion takes place. These stays are secured to the plate with a nut and washer outside, and a nut inside to lock, whose length is $\frac{2}{3}$ that of the outside, which is one diameter long.

The screwed stays are usually from $1\frac{1}{8}$ to $1\frac{1}{2}$ in. diameter, with a Whitworth standard fine thread. The most useful sizes are $1\frac{1}{4}$, $1\frac{3}{8}$, and $1\frac{1}{2}$ in., suitable for $\frac{7}{16}$ to $\frac{5}{8}$ in. plates, and pressures from 60 to 180 pounds per square inch. When screwed through a plate whose thickness is less than half the diameter, there should always be a lock nut with a thin washer, the nut being $\frac{2}{3}$ the diameter of

* *The Board of Trade* allow 5,000 lbs. per square inch on iron welded stays; 7,000 lbs. per square inch on solid iron screwed stays; and 9,000 lbs. per square inch on steel stays. No steel stays to be smithed or welded.

† *Lloyd's Registry* allow 6,000 lbs. per square inch on iron welded stays, screwed stays, and other stays not exceeding $1\frac{1}{2}$ inches effective diameter; 7,500 lbs. per square inch for all iron solid stays about $1\frac{1}{2}$ inches effective diameter; 8,000 lbs. per square inch on *steel* screwed stays and other stays not exceeding $1\frac{1}{2}$ inches effective diameter; and 9,000 lbs. per square inch for stays above $1\frac{1}{2}$ inches effective diameter. No steel stays are to be welded.

the stay in length. The practice of "nobbling," or riveting over the ends of these stays, is very objectionable when they pass through thin plates, as extreme pressure is very apt to cause the stay to draw completely through the plate, and this is especially so when the plate is ductile and soft like mild steel.

When stays are fitted with nuts and washers at their ends, the following rule holds good:

$$\left.\begin{matrix}\text{Pitch of stays in}\\ \text{inches}\end{matrix}\right\} = 10 \times \sqrt{\frac{(\text{Thickness of plates in sixteenths})^2}{\text{Working pressure.}}}$$

Example.—What pitch of stays is suitable for a plate $\frac{5}{8}$-inch thick for a working pressure of 60 pounds?

$$\text{Pitch} = 10 \times \sqrt{\frac{10^2}{60}}, \text{ or } 12{\cdot}9 \text{ inches.}$$

The Board of Trade has a slight modification of the above (*vide Appendix* D), with variations in the value of the constant. Lloyd's rules also provide separate constants for the various methods of work (*vide Appendix* C).

Flat plates may be stiffened to allow of wider spacing of the stays than given by this rule, by fitting thick washers of large diameter to each stay, or by connecting the stays to the plates by means of angle-irons or T bars; the latter plan possesses the advantage of distributing the strain over a large area, and that without a doubtful joint, as is the case with nuts. The old plan of riveting a doubling plate of common iron in wake of the large stays has almost disappeared.

Water Spaces.—The spaces between the furnaces themselves, between the furnaces and shell, and between the combustion chambers, although sometimes diminished, should not be less than 6 ins.; that between the backs of combustion chambers and shell should taper from 6 ins. at the bottom, to 9 and even 12 ins. at the top, to allow of the free current upward of the steam generated on the surfaces. If the spaces are less than 6 ins., it is very difficult to hold up rivets, to clean the surfaces from scale, or to get a good circulation.

The space between the nests of tubes should not be less than 10 ins., and, when possible, should be 12 ins. This permits a man to go down to clean across, and ensures good circulation.

Man-holes.—The chief one in the shell should be oval, 16 ins. by 12 ins.; those in the ends, &c., may be 15 ins. by 11 ins.; and the smallest through which a boy can pass is 14 ins. by 10 ins. Mud-holes are generally 9 ins. by 6 ins., and peep-holes 6 ins. by 4 ins. The hole cut in the shell plating should be surrounded by a doubling plate or angle bar ring, to compensate for the metal cut away, and the holes through thin plates should have such rings to stiffen the edges.* The doors are usually placed inside the boilers, and held to their faces by studs screwed into them, which pass

* A better plan is to flange the plate inwards so as to stiffen the edge and give a good face for the door joints.

through strong cross bars or "dogs," held by square nuts; the main door in the shell is, however, sometimes fitted externally, and connected to a flanged ring with bolts, in the same way as a steam chest door on the engines. The doubling ring is in this latter case formed of a very thick angle-iron, whose *deep web* is flanged to fit to the boiler, and whose flange forms the face for the door.

CHAPTER XXI.

BOILER MOUNTINGS AND FITTINGS.

Smoke Box.—This appendage to the boiler is for the purpose of receiving the products of combustion as they emerge from the tubes, and conducting them through the "uptakes" into the funnel. In the old box form of boiler, it was built inside, and formed an integral part of the boiler; but with the modern cylindrical boiler, it is a separate structure, secured to the boiler front by studs. It is constructed of iron* plates and angles of "ship" quality, and made "smoke tight" only; it should, however, be caulked if necessary to prevent air passing to the inside. In front of the tubes are a number of doors hung on hinges, and so arranged that every tube may be swept or removed in case of necessity. The doors should be of such a size as to be easily handled, and when the nests of tubes are so large as to cause the door to be too ponderous if made in one, two doors may be fitted to close on a portable stanchion. The doors are sometimes arranged to open on a horizontal and sometimes on a vertical axis; the latter is preferable when possible, as then they are more easily handled.

The bottom of the smoke-box should be at least 12 inches broad measured in direction of the length of the boiler, and when possible, as much as 15 inches. If too narrow, it is soon filled with soot and ashes, so as to cover the ends of, and render useless, the bottom rows of tubes; the baffle plates on the doors also are soon burned away. The bottom plate should be at least 2 inches below the bottom row of tubes, and the side plate the same distance from the side tubes, so that the tubes may be drawn clear of the 2 inches angle-iron rim around the doorways. The front of the smoke-box is sloped outwards, so as to be about twice the breadth of the bottom from the boiler front, above the level of the top row of tubes. Above this, the smoke-box contracts towards the funnel base, and its configuration must depend on the position of this, and on the consideration that the section transverse to the flow of gases must have an area at least equal to the area through the tubes.

* Steel plates are now as cheap as iron, and much easier to work both hot and cold.

The part between the smoke-box and funnel is called the "uptake," or "take-up;" it should have easy bends, and lead as directly as possible to the funnel, and be without recesses and obstacles where the draught may be baffled.

The bottom and sides of the smoke-box and sides of the uptake, should be of $\frac{1}{4}$-inch plates for large boilers, but $\frac{5}{16}$ for smaller ones, and where weight is a consideration $\frac{1}{8}$ is sufficient. The smoke-box doors should be of the same thickness, and have baffle plates $\frac{1}{8}$ inch thick on the inside, and air or screen plates of the same thickness outside; these screen plates prevent radiation of the heat to the stoke-holes, and for the same purpose the sides of the smoke-box and uptake should be fitted in the same way.*

To protect the boiler front, which has only steam on its inner surface, the uptake should have a back commencing from just above the level of the top row of tubes. When this cannot be done, a good and well fitting baffle plate should be fixed to the boiler front.

A casing is also fitted round the funnel from its base to the level of the deck casing, to prevent radiation. A corresponding casing is fitted round the funnel, above the level of the deck coamings, to a convenient height, and over this is fitted a hood secured to the funnel, so as to prevent water passing down, while allowing the hot air to come out. This hood is called by various names as "cravat," "bonnet," &c. It is now often at the top of the funnel, so the latter is completely protected from the weather.

When there are several boilers discharging smoke to one funnel, each smoke-box should have a separate uptake, so that the smoke from one does not enter the box of another; and when there are no good ash-pit doors, there should be a damper in each of these uptakes, so as to regulate the draught, and get a uniform evaporation from all the boilers, and, in case of necessity, to isolate a particular boiler.

Funnel.—This is usually of circular section, but sometimes, to minimise the transverse size of the boiler-hatch, it is made of oval section. The funnels of men-of-war are often made of oval section for the same reason, but instead of the section being an ellipse, as is generally the case in the mercantile marine, it is like that of an oval boiler. The best height to look well is 5 to 6 diameters above the taffrail, the latter when there are high bridges or boats in wake of the funnel. For the same reason, the ring for the shrouds should be $\frac{9}{10}$ the diameter from the top. Funnels are made of ship quality plate, lap-jointed, or butt-jointed with single straps inside; the latter costs more, but when so made is more durable. Another method much in fashion at one time, and which presents a good appearance, is to make the longitudinal joints with inside butt straps, and the circumferential with a band of iron of a flattened U section.

The funnel plates should, for strength, be thicker at the base than at the top, but the top plates wear out faster than those at the bottom. The following may be taken as the approximate thickness of funnel plates:—

* Steel is now generally used which can be obtained in thin sheets at a low cost, so that, in warships and other full-powered ships, 20 per cent. lighter plating will do.

Top plates = 0·1 inch + 0·025 for each foot of diameter.
Middle „ = 0·125 „ + 0·025 „ „
Bottom „ = 0·15 „ + 0·025 „ „

If the funnel is stiffened with angle or T bars, it may be made of somewhat thinner plates. The funnels of naval ships are, of course, made as light as possible, and the plates composing them are seldom more than $\frac{3}{20}$ inch thick, and of steel.

Furnace Fronts and Doors.—Although often made of cast iron, they are better made of wrought iron to withstand the rough use to which they are exposed. It is from this cause that all the improved doors which have been tried have been finally rejected; and because of this rough usage all attempts at refinement in the fittings, &c., meet with want of success on board ship. The smaller the door the better, as, when open, an excess of air passes into the furnace and lowers its efficiency; on the other hand, it must be large enough to stoke, work, and clean the fires. A long grate requires a larger door than does a short one. Furnaces of large diameter, that is, above 42 ins., should have a pair of doors to be used alternately. The amount of opening when stoking or cleaning fires is thereby reduced, and the sides of the grate are better attended to.

The doors should be so arranged as to remain open in a seaway when required; this may be effected by making a projection and corresponding recess in the hinge. A star damper should be fitted to the fire door, so that when open a supply of air is admitted to the fires. The baffle plate inside the door should have a number of small perforations, in this case, to finely divide and to distribute the extra supply of air.

Fire-bars.—The length of grate should never exceed twice the diameter of the furnace, as the fires cannot be properly worked when this is the case. To get the highest efficiency of grate, it should not be more than $1\frac{1}{2}$ times the diameter. The slope of the grate should be 1 inch to the foot, which may be increased, in furnaces over 42 ins. diameter, to $1\frac{1}{2}$ inch with advantage. If the grate is over 5 feet long, there is generally some difficulty in properly stoking the back end, and it is only a good fireman who can properly work the fire on a long grate. The increased slope materially helps to overcome this difficulty, and at the same time the fire is better supplied with air at the back, and not choked by the products of combustion from the front.

The bridge or brick barrier at the end of the grate should be built to such a height that the area of passage over it is not less than $\frac{1}{3}$, nor more than $\frac{1}{5}$ the grate area; and, when possible, the distance from the top of the bridge to the top of the furnace should be sufficient for a man to pass into the combustion chamber.

When anthracite or other similar coal is to be burnt on the grate, there should be no space between the bars and the side of the furnace; when the furnaces are corrugated, these side bars should be made to fit into the corrugations.

The fire-bars are usually in two lengths; but the grate is more efficient when they are in one, as the bearer is avoided, which baffles the free flow of air to the fire above it, and prevents the fireman from "pricking" effectively. Cast-iron fire-bars to burn bituminous coal may be 5 feet 6 inches long, but if the coal contains much sulphur they are safer in two lengths. The Admiralty do not allow the bars to be longer than 27 ins., even when made of wrought iron, as they generally burn Welsh coal, and may have to use, on foreign stations, coal containing sulphur.

Fire-bars are made from 1 to $1\frac{1}{2}$ inch broad on the face; the former is better when the bars are not very long, and when of wrought iron may with advantage be even $\frac{3}{4}$ inch. In the mercantile marine $1\frac{1}{4}$ inch is the usual breadth.

The depth of the bar at the middle depends on the length, and should be:—

$$= 0{\cdot}6 \sqrt{\text{length}}, \text{ when of cast iron,}$$

and $$= 0{\cdot}5 \sqrt{\text{length}}, \text{ when of wrought iron.}$$

The thickness at the bottom should be one-third the breadth at the face, and should taper to two-thirds beneath the flange.

For burning bituminous coal there should be a space of half-an-inch at least between the bars, and when it cakes quickly, there may be as much as $\frac{3}{4}$ inch; but if Welsh coal or anthracite is to be burnt, there should never be more than $\frac{1}{2}$ inch spaces, and with narrow bars the space may with advantage be less.

Martin's Patent Bars consist of wrought-iron bars of square section placed with the angles upward, and so arranged that the bars may be slightly turned so as to clean the fires.

Henderson's Patent Door and Bars.—This is one of the most successful of the improved grates. The bars are of cast iron and ordinary section, hung in a frame, which can be easily moved by means of levers, so as to slightly move alternate bars longitudinally; this movement breaks up the clinker, and obviates the necessity of cleaning the fire. The door of the furnace is hinged horizontally at the bottom, and so arranged as to drop into a recess in the dead plate left for it, which recess is filled by a back piece attached to the door, that turns down as the door opens; if the fire needs cleaning, the door is turned still farther, so as to leave the gap in the dead plate, and form a slope below it to shoot the clinker and cinders into the ash-pit, instead of raking them on to the stoke-hole floor. The furnace front, too, is carefully designed so as to pass a current of air completely about it between the front and back, thus serving the double purpose of keeping the front comparatively cool, and of heating the air before entering over the fire.

Stop-Valve.—The main stop-valve should be of sufficient size to pass out all the steam the boiler is capable of making *with little resistance;* the chief loss of pressure in the cylinders is often due

to the stop-valves being only partially open; on the other hand, when the cylinders are large and the strokes of the piston comparatively slow, priming may be effectively checked by partially closing the stop-valve, so that there is no sudden withdrawal of steam.

The diameter of the stop-valve is generally settled from considerations of the size of the main steam pipe at the engines. Let D be the diameter of the main steam pipe, and n the number of boilers (at least two), then

$$\text{Diameter of branch pipe to each boiler} = D\sqrt{\frac{4}{3n}}.$$

The area of pipe section to suit a boiler may be found by the following rule:—

(0·25 square inch per square foot of grate + 0·01 square inch per square foot of total heating surface) $\times \sqrt{\frac{100}{\text{pressure}}}$.

Example.—To find the diameter of steam pipe from a boiler whose grate area is 50 square feet, and the total heating surface is 1500 square feet; pressure, 80 lbs.

$$\text{Area of section} = (0{\cdot}25 \times 50 + 0{\cdot}01 \times 1500) \times \sqrt{\frac{100}{80}}$$

$$= 30{\cdot}7 \text{ square inches.}$$

Therefore the diameter should be $6\frac{1}{4}$ inches.

Example.—To find the diameter of the main steam pipe of a locomotive boiler whose grate area is 16 square feet, the total heating surface 1200 square feet, and the pressure 150 pounds.

$$\text{Area of section} = (0{\cdot}25 \times 16 + 0{\cdot}01 \times 1200) \times \sqrt{\frac{100}{150}}$$

$$= 13{\cdot}09 \text{ square inches.}$$

Therefore the diameter should be $4\frac{1}{8}$ inches.

The diameter of the stop-valve should be such that the clear area past it is not less than given by the above rules.

$$\text{The diameter of spindle} = \frac{\text{diameter of valve}}{50} \times \sqrt{\text{pressure}} + \tfrac{1}{8} \text{ inch.}$$

The valve and seat are of gun-metal or bronze, and should be both hard and strong. The valve should have the boiler pressure always on the side opposite the spindle, so that it helps to open it. The spindle should have a square thread, and when possible the screwed part should be outside, so that in opening or shutting the valve the spindle does not turn round. As the full pressure is

on the valve when shut, the bridge, &c., should be strong enough to withstand it. The seat when fitted with wings for the guide to the spindle should be carefully secured and the wings curved, so that when expanding with the heat the seat is not distorted. These seats when fitted into cast iron are very apt to get loose and leak from the permanent set of the metal, induced by the resistance of the cast iron to expansion of the brass.

The Admiralty require stop-valves and all other boiler mountings to be made of bronze. This, no doubt, is a wise precaution, though it has not prevented, but in some cases been the cause of accident.

The Admiralty likewise require a non-return or self-acting stop-valve, which shall close on the pressure in the boiler being decreased below that in the main steam pipe. This is with the object of localising the danger and disconnecting the boiler in case of accident to it from shot, &c.

Safety Valve.—As its name implies, this valve is for the purpose of providing a safe and self-acting means of relieving the boiler from excessive pressure. A good safety valve should be (1.) large enough in diameter, and have sufficient lift to allow the steam to escape as fast as it is generated, when the pressure is slightly above that to which the valve is loaded; (2.) it should be so made that it closes again as soon as the pressure has dropped below the load; (3.) it should be free to open and shut, so that it may always act efficiently and promptly; (4.) it should be so enclosed that it cannot be tampered with or accidentally interfered with by pieces of coal, &c., falling into it; and, (5.) for marine purposes it must be so constructed as not to be affected by the motion of the ship.

It is unnecessary to deal with weight-loaded valves, as none are now used, the fifth condition being satisfied by means of steel springs for the load. When weights were used the amount of lift given to the valve by the steam pressure was very small, and since the lifting of the valve compresses the spring and increases the load, the spring-loaded valve opens less. This being so, area of opening can only be obtained by increasing the diameter of the valve. Many ingenious methods of increasing the lift have been tried, but all those involving the use of special mechanism have given place to those which do without it; the most successful and best known of the latter is Richardson's Patent, generally called *Adam's*, after the name of the manufacturer, who purchased, improved, and worked the patent in this country. This valve consists essentially of an ordinary mushroom valve with a secondary outer rim of U section which overlaps the rim of the seat, so that there is a second contracted orifice at the outer edge of this rim. As soon as the valve opens, the steam fills the outer rim, and the valve is then virtually of larger area; the load on it is so suddenly increased that the valve lifts wide open immediately, and will continue to vibrate with the spring until the pressure falls so as to be insufficient to open the valve when the latter touches the seat in one of its vibrations. The second condition is best fulfilled when

the valve can be made to dance over its seat from the vibration of the spring. The third condition can only be fulfilled by making every movable part a very easy and, in most cases, *a very slack fit.*

To prevent the valve from being injured by accident or design, it should be enclosed in a case, and the Board of Trade require that such cases shall be locked up, and the key kept by the captain of the ship.

The Size of Safety Valve.—This depends on the *volume* of steam which can be generated by the boiler in a given time, and that depends on the weight of fuel it can consume, on its efficiency, and on the working pressure. In similar boilers, that is, boilers made on the same general design and for the same pressure, this volnme of steam varies with the grate area. The original rule laid down by the Board of Trade for the area of safety-valve, is based on this, and, since it was found to work satisfactorily, new rules have been laid down (*vide* Appendix G).

Strictly speaking any rule for the safety-valve should fix the amount of *circumference* rather than area, and considerable allowance should be made for the load pressure, as for the same weight of steam the volume varies inversely as the pressure. If the same tests had been applied formerly to safety valves as now obtain, very few would have passed satisfactorily the requirements of the Board of Trade.

The following are the rules for the size of valve :—

* (1.) To satisfy the *Board of Trade*, when the working pressure was 60 lbs. per square inch, there had to be a valve area equal to half a square inch for each square foot of grate area; except in the case of boilers having less than 14 square feet of grate, there must be two valves to each boiler, so that for ordinary boilers

$$\text{Diameter of each safety valve} = \sqrt{\frac{\text{area of grate}}{452}}.$$

The area of grate is here in square inches, since the diameter is required in inches.

Lloyd's lay down a similar rule, but allow special valves of any size, so long as they be satisfactory when tested.

(2.) *The French government rule* is based on the amount of heating surface contained in a boiler, and this perhaps is the truest gauge of a boiler's capability, as it bears a constant relation to the amount of coal consumed; allowance is also made for the steam pressure. The diameter is here given in inches, the heating surface in square feet, and the pressure in pounds per square inch.

$$\text{Diameter of valve (if only one)} = 1{\cdot}23 \sqrt{\frac{\text{total heating surface.}}{\text{pressure} + 9}}$$

(3.) The *German government* rule also makes allowance for the steam pressure, and is as follows :—

To have a *clear* area of valve or valves, after deducting for the

* *Vide* Appendix G for new rules.

wings or other obstacles, at the rate of so many * *square lines* for each square foot of total heating surface, in accordance with the following table :—

Working pressure in atmospheres . .	0 to 0·5	0·5 to 1	1 to 1·5	1·5 to 2	2 to 2·5
Number of square lines per foot of surface .	10	7	5·3	4·3	3·6

Working pressure in atmospheres . .	2·5 to 3	3 to 3·5	3·5 to 4	4 to 4·5	4·5 to 5
Number of square lines per foot of surface .	3·2	2·8	2·5	2·2	2·0

(4.) An improved rule, which is simple and easily used, is—area of each of two valves = (0·05 sq. inch per sq. foot of grate + 0·005 sq. inch per sq. foot of total heating surface) × $\sqrt{\frac{100}{\text{pressure}}}$.

Example.—To find, by the various rules, the size of a *single* safety valve for a boiler, whose grate area is 45 square feet, heating surface 1500 square feet, and working pressure 60 lbs.

(1.) By Board of Trade.

$$\text{Area} = \frac{45}{2}, \text{ or } 22{\cdot}5 \text{ square inches.}$$

Therefore, *the diameter is* 5·35 inches.

(2.) By French government rule.

$$\textit{Diameter} = 1{\cdot}23 \sqrt{\frac{1500}{60+9}} = 5{\cdot}73 \text{ inches.}$$

(3.) By German government rule.

$$\text{Clear area} = 2{\cdot}2 \times 1500 \text{ square lines}$$
$$= \frac{2{\cdot}2 \times 1500}{144}, \text{ or } 22{\cdot}9 \text{ square inches.}$$

Add to this 2 square inches for obstruction of wings,

$$\textit{gross} \text{ area} = 24{\cdot}9 \text{ square inches.}$$

* 144 square lines = 1 square inch.

Therefore, *diameter* is 5·6 inches.

(4.) By the improved rule.

$$\text{Area} = 2\ (0{\cdot}05 \times 45 + 0{\cdot}005 \times 1500) \times \sqrt{\frac{100}{60}}$$

$$= 25{\cdot}1 \text{ square inches.}$$

Therefore, *diameter is* 5·68 *inches.*

Seaton and Cameron's Patent.—Fig. 139 is an improved form of safety-valve, in which the valve sits on the outer edge of the seat, so as to get the largest possible circumference; the steam is by this means also deflected downwards, as it issues from the valve, and induces a downward flow of air from the spring case, through the annular space around the valve. When steam is "blowing off," there is no tendency to enter the spring chamber, and consequently the springs are unaffected, and do not corrode. This valve is also very prompt in its action.

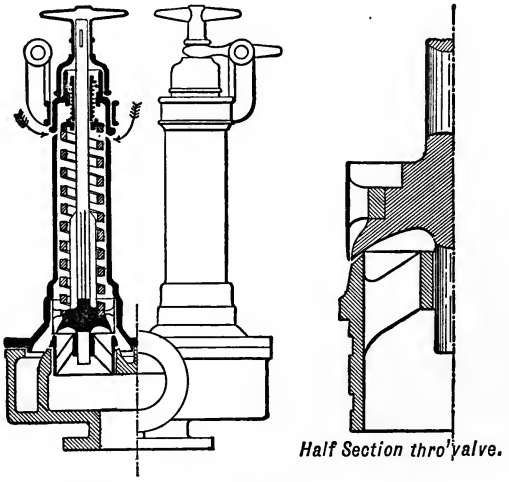

Fig. 139.—Seaton and Cameron's Patent Safety Valve.

The mitre on a safety valve-seat should not be more than $\frac{1}{16}$-inch broad, except for very large valves, and the bearing area in any case need not exceed that necessary for a pressure of 1200 pounds per square inch on it, when there is no steam pressure on the valve; hence,

$$\text{Breadth of mitre} = \text{diameter of valve} \times \frac{\text{working pressure}}{4800}.$$

The Board of Trade rule for the size of steel for the spring is

$$d = \sqrt{\frac{S \times D}{C}}.$$

S is the total load on the valve; D the diameter of coil, measured from centre to centre of wire, in inches; d is the diameter of round wire, and the side of square section wire; C is 8000 when the coil is made of round section steel, and 11,000 when of square section.

For other conditions required by the Board of Trade *vide* Appendix G.

Internal Pipes should be fitted from the stop-valves to the highest part of the boiler, and be made with holes or slits, whose collective area is equal to twice the area of section of the pipe.

The chief object of this pipe is to collect the steam gently from every part of the boiler, so as to avoid setting up a strong current in one particular direction, and thereby induce priming. These pipes are usually made of brass, but some engineers prefer copper, and others make them of cast iron to avoid risk of galvanic action and reduce the cost. By fitting an internal pipe, the stop-valve can be placed in a position convenient for examination and working, and it should always be so situated as to be easy of access at all times. Arrangements should also be made for opening and shutting it without going into a position of danger or difficulty, and this can always be effected by lengthening the spindles, or fitting chain gear. The Admiralty insist on having gear fitted so that the stop-valves can be shut from on deck, as well as in the stoke-holes.

In the mercantile marine, the stop- and safety-valve boxes are almost invariably made of cast iron; the valves, seats, and spindles being of gun-metal. The Admiralty require all boiler mountings to be made of gun-metal, and do not allow cast iron to be used.

Feed-Valves.—Each boiler should be fitted with a self-acting non-return valve, through which the feed-water is pumped. It should also have a screw spindle, which may be used to regulate the lift, or to shut it down when water is not required. There should also be a similar valve through which the donkey pump can discharge water to the boiler.

The valve is generally of mushroom form, and made similar to the ordinary stop-valve, except that it is detached from the spindle. It is made wholly of gun-metal, and should be very strong, as at times the pressure on it may be excessive.

There should be 6 square inches of clear area through the valve and pipe for every hundred pounds of water evaporated; or, put in a more convenient form,

Area through main feed-valve in square inches

$$= \text{total heating surface in square feet} \div 240;$$

and, area through donkey feed-valve in square inches

$$= \text{total heating surface in square feet} \div 300.$$

As the feed-valves cannot always be placed on that part of the boiler best suited to receive the feed-water, and also in order to distribute that water so as to avoid its affecting the boiler plates, an internal pipe should be always fitted. To avoid the necessity of blowing the boiler down in case of accident to the feed-valves, it is a very common practice to fit these valves high up on the boiler, even in many cases above the water-level. This plan also has the advantage of providing a means of warming the feed-water, than which nothing is more essential for the preservation of the boiler; the heating is effected by the passage of the water through a long internal pipe of brass or copper, which leads it to where there is a down current of water, so that the comparatively cold feed-water may not interfere with the circulation.

Some engineers prefer to inject the feed-water in the form of spray, either above or a little way beneath the surface of the water in the boiler; this avoids all chance of injury to the boiler plates, as any gaseous matter mechanically mixed with the feed-water is at once given up and mixes with the steam.

Great care should be taken in any case that the internal feed-pipes "run full;" that is, that they are never filled with steam, but always with water.

The *dynamic* effect of the steam in the feed-water, when mixed inside the pipe, is very startling; every stroke of the feed-pump produces an explosion, and in a very short time both external and *internal* pipes are damaged seriously.

To avoid this, the internal pipe should, when discharging above the water-level, be *turned upward* at the end, so as to always remain filled with water; and when turned downward to discharge under water, the end should be well below the lowest working level.

An additional means of safety is sometimes afforded by fitting inside the boiler a clack valve, so arranged as to close over the end of the internal pipe or on the spigot of the ordinary check valve; when this is provided, the latter can be examined when steam is up. A cock is also sometimes fitted close to the check valve, so that the supply can be regulated by it, instead of by interfering with the lift of the check valve.

Blow-off Cock.—A cock used to be fitted at or near the bottom of the boiler, to answer the double purpose of admitting sea-water before getting up steam, and to *blow off* some of the water when required. This cock should be a very strong one, as it is liable to rough usage, and being out of sight and not easily got at, it is very apt to be neglected. For this reason, as well as because a large cock is difficult to open and shut, some engineers prefer a valve to a cock. If a cock is fitted, it should be so arranged that its handle or spanner cannot be removed when it is open.*

The clear area through a blow-off cock should be

$= 1$ square inch $+ 0{\cdot}2$ square inch for each ton of water in the boiler.

As it is a very reprehensible practice quickly to blow off a

*Sea-water is now seldom or never used for filling boilers working at high pressures, so that a connection with the sea is not necessary.

marine boiler when at its normal working temperature, a somewhat smaller cock is fitted to the bottom of the boiler, so that when the pressure of the steam is down to about 20 pounds, the water may be blown into the sea through the ordinary cock, until the level is just above the furnace crowns; it is then allowed to remain and to cool down with the boiler, and finally emptied into the bilge through this cock.

Scum Cock.—A cock, having a clear area through it of one-third that of the blow-off cock, should be fitted to the boiler, near to the level of the water, and to it is connected a perforated pipe, inside the boiler, not lower than the lowest working level. The object of this pipe is to collect all *scum* and floating impurities from the water, and discharge it overboard. Large quantities of grease and greasy matter are pumped with the feed-water into the boiler, and should be got rid of occasionally; simple oil is not obnoxious, but rather beneficial, and need not be got rid off. A particular kind of hard grease is formed in the condensers of engines whose cylinders are lubricated with a certain class of oils; portions of it are pumped with the feed-water into the boiler in the form of small pellets, which, being of superior specific gravity to pure water, sink to the bottom, and remain there until the density of water increases sufficiently to cause it to rise and come in contact with the hot surface. It is, therefore, better to filter the feed-water than to trust to a scum cock or even a blow-off cock.

The scum cock was used as a means of reducing the quantity of water in the boiler before adding a fresh supply from the sea; but if the surface is clear of dirt this is better done with the bottom blow-off, especially if it is possible to check evaporation for a few minutes before blowing off.

Water Gauge.—It is of the first importance that those in charge of a boiler shall know with certainty the position of the water-level within the boiler. The ordinary gauge for this purpose consists essentially of a glass tube, whose ends communicate freely with the inside of the boiler, and so situated on the boiler that the plane of the water surface bisects the tube transversely when at its normal working level. It is, however, found necessary in practice to use considerable discretion in the choice of position of this gauge. Since a difference of one-tenth of a pound pressure corresponds to 2·7 inches of water, it is quite possible so to place the gauge as to give very false readings. The upper end of the gauge should not communicate with the boiler near to any exit for steam, for the rush of steam past the orifice can easily make a reduction in pressure of one-tenth of a pound in the gauge pipe. The lower end should also be clear of any part from which steam is evolved, as steam bubbles might flow into the pipe, and tend to raise the water-level in the glass.

It is usual, especially with large boilers, to fit the gauge cocks and *test cocks* to a brass casting connected by pipes to the bottom

and top of the boiler; this is called a "stand pipe," and is a necessity when the gauge is on the front of the boiler. The test cocks are placed on the stand pipe at the lowest and highest working levels, for the purpose of checking the glass gauge, and for use when the latter is broken or out of order.

The length of the gauge glass visible should be at the rate of $1\frac{1}{4}$ inches for each foot of diameter of the boiler; the external diameter of the tube is $\frac{5}{8}$ inch for small boilers, and $\frac{7}{8}$ inch for large ones; the glass is usually about $\frac{1}{8}$ inch thick. The Admiralty use $\frac{5}{8}$ inch glasses for all sizes of boiler.

The gauge is so placed that the water is just disappearing, or, as it is generally said to be, just in sight, when the level is from 2 to 4 inches above the top of the combustion chamber; the allowance should be 0·3 inch for each foot of diameter of boiler.

The pipes connecting the stand pipe to the boiler should be from 1 inch to $1\frac{1}{2}$ inches diameter, and of strong copper, so as to be fitted direct to the boiler. Some engineers insist on having a cock on the boiler at the top and bottom; but this, like many other intended extra safeguards, is itself a real source of danger, for the cocks are apt to be shut by mistake or carelessness, and thus cause the gauge to show a false level. That this is no mere fanciful danger has been proved on more than one occasion.

All large boilers, and especially those in ships which are often under sail, should have two water gauges placed as far apart as possible in an athwartship vertical plane.

The gauge and test cocks should always be fitted with a small plug in line with the bore, which, on being removed, allows a wire to be introduced to clean it of deposit and scale.

Steam Gauge.—The steam gauge on Bourdon's principle is now nearly universal and so well known as to need no description. Schœffer's gauge, although less liable to derangement than Bourdon's, is not so accurate, and does not find so much favour. The boiler gauge should have a dial so marked, that it may register pressures to at least 25 per cent. higher than the working pressure of the boiler. These gauges should be carefully tested when new, and at frequent intervals after being at work, as it is often found that they require some slight adjustment.

Sentinel Valve.—The Admiralty used to require each boiler to have a small valve loaded with a weight to a few pounds per square inch above the working pressure, so that in case of the safety valves sticking fast and the gauge being false, an alarm may be given when there is an excess of pressure. Such valves are generally about $\frac{3}{4}$ inch in diameter, but sometimes as small as $\frac{3}{8}$ inch. An arrangement of a small safety valve attached to a whistle has been introduced; but there should be no necessity for such refinements, and it is doubtful if in time of need they would be heeded.

Weir's Hydrokineter. — This instrument is for the purpose of warming the water in the bottom of the boiler when getting up steam. It consists of a series of nozzles, one within the other, each

having a grating-body in rear, through which the water passes on its road to the nozzle, when a current is set up by a jet of steam issuing from the centre one. The steam is obtained from the auxiliary boiler, which has been used to supply the winches. Without this instrument the bottom of a large boiler remains cold long after the steam is raised; with it the temperature of the water at the bottom differs very little from that at the top; steam can in this way be safely raised in a shorter time than usual, and at no extra cost, and the endurance of the boiler is very considerably increased. There are many other ways of promoting the circulation when steam is up, but none do this so efficiently during the time of raising steam as the *hydrokineter*.

Steam Whistles are of two kinds, known as the bell-whistle and organ-tube whistle; the latter is now fast superseding the former, on account of its simplicity of construction and superior tone. An improved form has a division in the tube, so as to emit two distinct notes, which may be in harmony or discord, and when sounded together are heard a long distance.

It is important that the whistle shall sound as soon as the steam is turned on; to insure this happening, great care must be taken to keep the whistle-pipe free of water, which is no very easy matter. It may, however, be effected in two ways: first, by leading the pipe from the boiler into the funnel, and keeping it inside as far as the level of the whistle; second, by taking steam for the steering engine from the top of the whistle-pipe, thereby ensuring a constant flow of steam and no accumulation of water.

Separator.—This, although not a boiler fitting, is intimately connected with them; it is almost unknown in the mercantile marine, although it might be used often with advantage there. All men-of-war were fitted with separators, and, from the tendency to prime on the part of their boilers when working at full speed, and the danger to the engines when working at a high velocity of piston, from water getting into the cylinders, they were necessary.

The separator consists of a vertical cylindrical chamber, having a division-plate extending from the top to about half-way down, and so placed that the steam in going through the separator must pass under this diaphragm; the object is to separate out the water mechanically mixed with the steam, by dashing it against the diaphragm, and precipitating it to the bottom of the separator, whence it is blown to the hot-well or sea, whichever is convenient.

The separator should have a diameter twice that of the steam-pipe, and be $2\frac{1}{2}$ to 3 diameters long. It is often made with a hemispherical top and flat bottom, and sometimes with both ends hemispherical. The division plate should extend half the diameter of the steam-pipe below the level of the bottom of the steam-pipe.

Boiler Clothing.—The boiler shell should be well covered with a coating of non-conducting material, to prevent loss by radiation from its surface, which may amount in some cases to 10 per cent. The material used should, besides being a non-conductor of heat,

be incombustible and inorganic. The following materials are those in general use for boiler clothing:—

Hair Felt is a good non-conductor, but it is very liable to take fire, and if exposed to moisture and heat will soon rot away. Although still used in the Navy, it is seldom employed for this purpose in the mercantile marine now. The Admiralty do not allow combustible material to be within 2 feet of the uptake.

Silicate Cotton,—manufactured from slag, and having the appearance of cotton, is eminently fitted for boiler clothing. It is a good non-conductor, incombustible, and imperishable from chemical action; it is, however, very brittle, and for this reason will not withstand mechanical action; and, therefore, if loosely packed, and subject to vibration, it soon becomes dust, which is most offensive if it gets into the engine bearings.

Asbestos Fibre has very much the same nature as silicate cotton, but is more durable. A paste made with this material is very efficient.

Cements of various kinds are used, their efficiency depending generally on the amount of vegetable fibre contained in them. These have not so high an efficiency as the foregoing.

Fossil Meal, or infusorial earth, is a composition containing large quantities of minute shells, and is a most efficient covering; besides being inexpensive, it is also incombustible and durable.

Papier Maché is employed for this purpose, and is a fairly good material; but it is not altogether incombustible, and is apt to rot.

The last three materials must be put on when the boiler is hot, and be carefully done; this does not militate in their favour, as it is an objectionable thing to have steam on the boilers when the ship is being finished.

The felt, silicate cotton, and asbestos fibre may be covered with wood-lagging, or sheet iron; the latter is more durable, and is now generally used. The cements are generally tarred over so as to be waterproof, and the parts exposed to wear covered with sheet iron or lead.

No wood should be used for clothing when it is possible to avoid it, as it so soon rots.

Cameron's Patent Lagging is an ingenious arrangement of wrought-iron framework, *strapped* to the boiler, so as to form a series of segments, which may be filled with any non-conducting substance, and is covered in with squares of corrugated sheet iron, secured in such a way as to be easily and quickly removed for examination or repair. This is the most perfect plan, as it avoids all piercing of the boiler shell with studs and the use of combustible materials, and while capable of being well secured, it is such as to be wholly removed and replaced in a very short time.

CHAPTER XXI.

FITTING IN OF MACHINERY, STARTING AND REVERSING OF ENGINES, &c.

Fitting Machinery into the Ship.—As soon as the building of the ship is sufficiently advanced to allow the engineers to commence their work, a line should be stretched in the place intended for the axis of the shafting, and from it reference lines must be scored on the bulkheads, sternposts, and other convenient places for future guidance, and to enable the shipbuilders to set the engine seating and tunnel pedestals with some degree of accuracy.

For this purpose piano wire answers best, as it can be drawn exceedingly tight without breaking, and the amount of "sag" is very slight, and does not vary. When wire 20 B.W.G. is used, and the tension on it as much as it will bear with safety (about 200 lbs. is sufficient), the "sag" will not exceed 0·15 inch per 100 feet. At the sternpost and bulkhead holes, cross pieces of wood should be fixed and the centre transferred to them; with these centres circles should be "scribed" in and marked with a centre punch, when they serve as guides in boring out for the stern tube. It is sometimes found advantageous to verify the centre line markings by the system called "sighting;" this is done by placing battens horizontally at convenient places, whose upper edges touch the centre line of shafting, and, when viewed, should all coincide if they are exactly in line. A similar system of battens should then be placed vertically with the same result, if the line is straight. This plan, however, is a somewhat tedious one, and by no means reliable in most instances owing to the deceptive nature of the light in the hold of a ship.

Boring the Sternpost.—A boring bar with tool head, &c., is fixed accurately in position by means of the reference circles before mentioned, and the sternpost, which has been roughly bored to within about 5 per cent. of the finished size before being fixed in place, is bored out to the exact size required; the bulkhead, with its liner, is also bored out, and also any other part into which the stern tube is required to fit accurately. The finishing cut through the sternpost should be commenced *from the inside*, as the wearing away of the cutting edge of the tool causes the hole to be slightly taper, and this allows the tube to be made a very tight fit in it.

Engine Seatings.—The superstructure raised on the ship's frames to carry the engines, is called by various names, such as *engine bed, engine seatings, engine foundation, engine bearers*, &c., and is one requiring some skill to design and care to manufacture properly. As the success and efficient working of an engine very materially

depend on this structure, too much care cannot be devoted to its construction. The weight of a marine engine is considerable, and concentrated on a comparatively small surface; in a seaway the inertia causes very severe strains on the seating and on the bolts connecting the engine to it; and, in some cases, the strain of the engine itself when at work is borne largely by the bed on which it rests, owing to the want of rigidity in the bedplate.

The ship cannot always be viewed as a rigid structure, for elasticity is observable in all ships when unloaded, and is very marked in those built for the lower classes of the different registers, and even in those for the highest classes, when constructed of steel. For this reason, the engine seating must be so designed as to add materially to the stiffness of the ship's structure, and be of sufficient strength to transmit any strains caused by the weight of the engines to the main framework of the ship. To this end, the vertical portions of the engine seating should be worked in with the floor plates and keelsons, and the longitudinals should extend beyond the immediate vicinity of the engine bed, so as to distribute the strain over a longer portion of the ship, and not localise it on a few frames. The longitudinal strength added to the ship's bottom should not end abruptly at the aft bulkhead, as is commonly the practice, but be continued abaft it and decreased gradually. The effect of stopping the engine seating at the aft bulkhead of the engine-room, is to cause a sudden change of flexure in the ship's bottom at that point, when the ship is steaming in a heavy sea; this change of flexure produces abnormal strains on the shafting, especially on the after part of the crank-shaft; the after bearing of crank-shafts shows this by its tendency to heat, and, in extreme cases, the shaft is broken at the crank-arm, or at its junction with the crank-arm. When the crank-shaft is connected to the thrust shaft by drivers, the working of the ship is proved by the squeaking sound emitted by them when not oiled.

The scantlings of the engine seating should never be less than those of the ship's bottom to which it is fixed, and when the seating is high, they should be in excess of the ship's scantlings. The angle-irons should be carefully fitted, and the riveting more than usually good; the rivet holes should be fair and well filled with the rivet; and if the holes are not fair, simply drifting them out to allow the rivet to pass through is not sufficient; these remarks particularly apply to the connection of the top plate with the verticals. The top plate should be at least 50 per cent. thicker than the vertical plates, and well bedded in place.

It is the practice with some engineers to hold the engines down to the ship by a few large bolts which pass below the seating, and connect to strong cross-bars under the reverse frames of the ship; this is, however, not a good practice, as the strain is localised to an unnecessary degree, and such bolts are very apt to corrode rapidly from the action of bilge-water, and, being unseen, to break without being discovered.

The engine seatings are peculiarly liable to decay from the action of bilge-water and its gases; to prevent this they should be carefully protected by cement where practicable, and well painted where cement cannot be got to stick; cement is, however, better than paint, and if mixed hot, and washed on, will form a very efficient covering.

Thrust Block Seating.—This also, from the nature and the magnitude of the strains on it, must be carefully constructed. There should be three vertical plates, extending over, at least, four frames in small ships, and six frames in large ones; the centre plate should be above, and strongly secured to the keelson by angle-irons, its thickness should be 50 per cent. more than that of the floor plates; the side plates should be 25 per cent. thicker than the floor plates, and connected to the reverse frames by strong angle-irons; all three verticals should be caused to abut on the engine seating and tied to it. The top plate should be of the same thickness as that of the engine seating, and when possible in line with it. Stop plates should be riveted to the top plate to serve for the thrust block to abut on. All the rivet holes in this top plate should be quite fair with the holes in the angle-irons and connections, and rimered out when not so, and care should be taken that all the rivets quite fill the holes. In ships of very large power, the base of the thrust block seating should extend over more than six frames, and under the vertical plates there should be plates worked intercostal with the floors, so as to form a direct tie to the ship's bottom plating.

Pedestals for Tunnel Shafting.—The plummer blocks for the tunnel shafts rest on the tunnel bottom when the shafting is not high, but when the distance is too great for this, pedestals are built of plates, whose thickness is about the same as that of the floors, connected by angle-iron, so as to form a stiff column; the top plate should be 50 per cent. thicker.

Boiler Seatings or Bearers.—The boiler, with its fittings and mountings, together with the water it contains, requires a very strong support and efficient means of keeping it in place when the ship is rolling or pitching. When the boilers are placed athwartships (that is, their axes are athwartship), the bearers act as beams to distribute their weight over a large number of frames, and may be made of H section, so that the lower flange is riveted to the reverse frames, and the top flange carries the chocks, which are wedge-shaped, and shaped to fit under the boilers, and form saddles for them to sit in. Single-ended boilers should have two such saddles, whose breadth of face where the boiler rests should not be less than nine inches for very large boilers, and six inches for small ones. Double-ended boilers of moderate length and size may have three such saddles, but long or large double-ended boilers should have four sets. The chocks are sometimes made of angle-iron and plates, but they are better made of cast iron; when of the latter material, the patterns can be tried in place after the boilers

are in position, and made in such a way that the chocks, when cast, will fit with sufficient accuracy as to require no packings; when made of wrought iron, much expense is incurred in trying to make them fit, and in the end packing is often necessitated.

If the boilers are placed "fore and aft," that is, with their axes longitudinally, the bearers are generally laid on the top of individual floors, thus localising the weight on a few frames only. To avoid the straining action proving dangerous, the longitudinals of the ship in wake of the boilers should be increased, and extra connections made between them and those frames carrying the bearers. Sometimes the boilers when in this position have been carried by longitudinal bearers inclined so as to be in planes passing through the axis of the boiler.

Such bearers distribute the strain over a considerable number of frames, but do not so well support the boiler, and moreover prevent access to the boiler bottom for examination and repair.

Copper Pipes.—The whole of the pipes subject to internal pressure should be of copper; the exhaust pipes may be, and usually are in the mercantile marine, of cast iron. The Admiralty require that all pipes shall be of "solid drawn" copper up to 6 inches diameter. Wrought-iron and steel pipes are now very generally employed, especially for large sizes and high pressure. If of steel the Board of Trade require a butt strap to be riveted over the weld.

The thickness of the main steam pipe should

$$= 0{\cdot}125 + (\text{diameter of bore} \times \text{pressure} \div 10{,}000).$$

The thickness of feed pipes

$$= 0{\cdot}125 + (\text{diameter of bore} \times \text{pressure} \div 8{,}000).$$

The thickness of blow-off and scum pipes

$$= 0{\cdot}125 + (\text{diameter of bore} \times \text{pressure} \div 9{,}000).$$

When made of steel or iron welded the thickness should be 20 per cent. more than given by the above.

The thickness of main inlet pipes $= 0{\cdot}1 + (\text{diameter} \div 300)$.

The thickness of main discharge pipes from reciprocating pump

$$= 0{\cdot}1 + (\text{diameter} \div 200).$$

If for a centrifugal pump the discharge may be of the same thickness as the inlet pipes.

The thickness of feed suction pipes and bilge-discharge pipes

$$= 0{\cdot}09 + (\text{diameter} \div 200).$$

The thickness of waste steam pipes $= 0{\cdot}05 + (\text{diameter} \div 500)$.

The flanges should always be of tough brass, and of a thickness equal to 4 times that of the pipe; the breadth of flange should be $2\frac{1}{4}$ times the diameter of the bolts used. For pipes exposed to high pressure of 30 lbs. and upwards, the pitch of the bolts should not

exceed 5 times their diameter, or 5 times the thickness of flange; their diameter is usually about the same as the thickness of flange. For pipes not subject to a pressure of less than 30 lbs., the bolts may be 6 diameters apart, or even a little more in some cases.

Fitting Machinery on board the Ship.—The stern tube and the screw shaft are fitted into place, and all sea-cocks and valves fixed to the skin of the ship before it is launched. After it is in the water, the tunnel shafting is placed in position piece by piece, each one being set so that its coupling comes fair and true with that of the preceding one; the shaft bearings are raised on temporary packings until the whole of the shafting is in place and coupled up; when this is done, the shafting should be turned around so that the bearings, if not placed in *exact* position at first, may adjust themselves; the bearings should now have the proper packings fitted to them, and when bolted down, the coupling bolts should be withdrawn, and each shaft tried around to see that there is no want of correspondence at the couplings. This may seem a somewhat tedious process, but it is a very safe one, and one which prevents all possibility of shafting being fitted out of line; the engineers of the ship should occasionally withdraw the bolts, and prove the shafting true, especially after the ship has had cause for straining. Of course, the accuracy of this method depends on the care with which the couplings have been turned; but, as modern appliances are capable of turning a shaft coupling quite true with very ordinary care, there is little cause for fear on this ground.

The engine bed-plate, or foundation plate, with the crank-shaft in place, is now lowered on board, and placed on temporary packings of iron; it is, by means of jacks, brought to its exact position, and proved by the shaft couplings as before. Permanent packings of *cast iron* are now carefully fitted between the temporary ones and the latter withdrawn, and their places filled with hardwood (teak, greenheart, elm, mahogany, &c.) packings formed of pairs of wedge pieces driven from opposite sides.

The Holding-down Bolts should be carefully fitted so as to distribute the strain over the bed, and means provided to prevent the nuts from slacking back; the Admiralty require check nuts to be fitted to all holding-down bolts, but it is better to prevent movement of the nut by slightly riveting the bolt end, than to trust to check nuts.

Staying Engines.—Vertical engines, especially those of long stroke, are supposed to require some means of support to prevent undue straining of the columns when the ship is rolling heavily. Such engines, when supported by *vertical wrought-iron* columns, do occasionally show signs of such a need; but it is better to bear this contingency in mind when designing the columns, and make them sufficiently strong and rigid to withstand such strains, than to trust to getting support from the elastic hull of the ship. In case of a collision, such supports might be a positive source of danger, as the force of the blow delivered in their neighbourhood might seriously damage the engines, if not destroy them altogether.

Such support as is sufficient can be provided by splaying out the front columns, as shown in fig. 9, and making them of strong cast iron or cast steel.

Boiler Seats.—The boilers require to be carefully fitted in their seats, and secured there so that they cannot be displaced by the rolling or colliding of the ship. The boiler should require no packings when the chocks are of cast iron; but when the saddles are of wrought iron, and do not fit the boiler exactly, it is better to interpose iron packings at intervals, and fill in the spaces between with hardwood wedge pieces. To prevent movement longitudinally, "toe" plates should be riveted to the frames or other convenient part of the ship's structure, and these should be stiffened by angle-irons. The "toe" plates should stand about 6 inches above the bottom of the boiler, and be clear of the man-holes and mountings. The boiler is held in its seating by straps surrounding it, and secured to the bearers when of small size; but the general practice is to secure it by tie-bars from its upper part to the side of the ship, or by struts formed of plates and angles from the stringers, bearers, &c. Each particular case requires special treatment, and it is impossible to lay down any rule, beyond that of providing for every contingency to which a ship is liable. Tie-bars from the boiler sides to the bearers is a good way to secure them, and is the Admiralty practice.

At one time the Admiralty practice was to lay the boiler in a bed of mastic cement, spread on a cradle formed to suit the boiler bottom. This was very necessary for the box form of boiler, especially in wooden ships. This cement also practically insulated the boiler, a practice which may be followed now with advantage to both ship and boiler. A strip of asbestos answers the purpose. The boiler bottom in iron ships should be well above the bilges, and room provided for a man to get in to paint or repair; the boiler bottom and ship's framework can then, and should, be kept well painted.

Starting and Reversing Engines.—It is most important that an engine shall be capable of having its motion instantly reversed; in fact, no engine is satisfactory which cannot be stopped and made to move full speed astern in less than 30 seconds from the time of the engineer commencing the evolution. This can scarcely be done by the hand-gear with comparatively small engines, and is beyond possibility with large ones. It is essential, therefore, to provide mechanical means for this purpose in all engines of over 100 N.H.P., if such efficiency is required; and it should be of such power as to perform the operation without shutting off steam. The simplest method is to fit a steam cylinder to the ordinary hand-gear, the piston pushing and pulling as required to help the engineer. There is, however, the objection to this, that the cylinder is then somewhat large, and at times the steam-power masters the hand-power, and overruns its limit, thereby tending to cause damage. This latter objection, however, is easily got over in many ways, the best of which is by adding a second small

cylinder containing water or oil, which is forced by its piston from one end to the other, and thereby acts as a brake to the gear.

Brown's Patent Reversing Gear.—This idea of the brake cylinder has been worked out, and perfected by Messrs. Brown of Leith, who make a gear which, by the movement of a small lever easily moved by one hand, operates on the valve motion instantly, and only to the exact extent intended by the operator, so that if the engineer moves the lever through one-quarter of its angular movement, the link-motion is moved by the gear through exactly one-quarter of its traverse. This is effected by means of a system of levers, so arranged that the gear, by moving, replaces the valves in the exact position from which they were displaced by the hand-lever.

Steam Gear for Reversing.—The simplest and most efficient of the steam gears, and one whose cost is so small that it may be fitted to the cheapest of engines, consists of a small engine, on whose crank-shaft is a worm, which works in a worm-wheel capable of turning freely on a fixed gudgeon on the engine frame or other convenient place; on this worm-wheel is a stud or crank-pin, to which is fitted a rod connecting it to a lever on the weigh-shaft; the eccentricity of the crank-pin is equal to half the chord of the arc through which the lever end works. The engine being set in motion, the worm-wheel is caused to revolve, and the motion of the crank-pin causes the weigh-shaft to oscillate, and so to reverse the links. The steam-cylinder is sometimes fitted with reversing-gear, but it is quite unnecessary, and is really better without it, as the little engine moves so fast that practically no time is lost in making a complete revolution of the worm-wheel.

The advantage of this gear over others, besides its cheapness, is its simplicity, safety, and capability of being used to turn the engines when in port, or to work a winch for lifting weights when overhauling the engines; the hand-wheel is also in this case on the little engine shaft, and acts as a fly-wheel.

Steam Turning Gear.—Another labour-saving appliance now becoming universal in the mercantile marine, is steam gear for turning the engines when in port. Sometimes a separate engine is provided for the purpose, but in small ships the donkey pump engine, or the reversing engine, when there is one, is employed by using belt or rope gear. The usual plan is to fit a second worm-wheel to the worm-shaft, and to turn it by a worm on the shaft of the special engine, or on a shaft with a pulley to be worked by an auxiliary engine.

Steam Ash Hoists.—All large ships require some mechanical means of disposing of the ashes, clinker, &c.: the simplest form of hoist is only a small winch worked by a steam engine without wheel-gearing; the barrel is of small diameter, and the fly-wheel is heavy, and kept running at a constant speed, the bucket of ashes being "whipped" up in the same way that light cargo is

got out of the holds with a steam winch. This gear has the merit of cheapness and simplicity, it can be worked by the most ignorant, and does not easily get out of order.

Galloway's Ash Hoist is an ingenious arrangement whereby the bucket is hoisted to the top of the tube, and tilted over so as to upset its contents into a shoot leading to the ship's side. With this gear the fireman is not required to leave the stokehole.

Governors.—To prevent the engines from racing when the sea is rough, it was usual to fit an instrument which should control the throttle-valve, and work automatically. The governor, as fitted to land engines, is not admissible on board ship, owing to its susceptibility to derangement from the motion of the ship.

There are two distinct classes of marine governor—viz., those whose action is influenced by the variation of motion of the engine itself, and those whose action is due to the variation of pressure at the stern, due to variation of head of water. The former class can only act *after* a variation of speed has taken place, the latter anticipates and checks such variations. At first sight the latter present the most favourable qualities, inasmuch as they *anticipate* change of velocity, but they serve only one purpose, that of checking *racing* of the engine due to the propeller emerging from the water. The other governors are necessarily a little late in action, but they may be made so sensitive as to be almost as quick as the others; they have, however, one superior merit, and that is, they check racing from any and every cause. If a propeller or shaft break, the pneumatic or hydrostatic governor fails to check the engine; the other governors will check any large increase in velocity, and give the engineer time to shut off steam.

Both classes of governor are susceptible of subdivision, and may be distinguished as those which act direct on the throttle-valve, and those which act on the valve of a steam cylinder, whose piston operates on the throttle-valve.

Silver's Governor.—The principle of this governor is to obtain a motion for its gear, which operates on the throttle-valve, by means of the variation in the velocity of a heavy fly-wheel and its shaft, which is driven by the engine, and on which it may revolve loosely; the wheel is capable of only small angular movement with respect to its shaft, and is set in motion by the "stops" acting on it; its motion is kept sensibly uniform by its inertia, and by vanes attached to it acting on the air. The motion of the gearing operating on the throttle-valve is obtained by a bevel pinion on *the wheel*, acting on two bevel quadrants working on gudgeons on the *shaft;* so long as the shaft and wheel work at the same speed, there is no motion of the quadrants; when there is a change of velocity the quadrants are turned on their axes, and the throttle-valve is moved.

Meriton's Governor. — This works on the same principle as Silver's, but has different gearing to obtain the longitudinal movement of the part which actuates the throttle-valve. Here the

heavy wheel has cast with it parts of two helices, which fit two corresponding parts on a coupling; it is drawn round with, and free to slide on, the governor shaft; the wheel and coupling are pressed together by a coach spring.

There are some other governors which have been used for marine purposes, but as they are now entirely superseded by steam governors, it is unnecessary to particularise them.

Dunlop's Governor. — This instrument consists of a vertical cylinder placed close to the stern of the ship, and as low down below the water line as convenient; there is a communication between the sea and the bottom of this cylinder by a cock or valve of ample size, fitted to the skin of the ship. When the stern of the ship is lifted out of the water, the cylinder is emptied of water, and the pressure in it is that of the atmosphere; on the stern dipping deep into the water again, the water rushes into the cylinder, and compresses the air in it, till there is a pressure due to the "head" of water, which may amount to as much as 12 lbs. per square inch in large ships, and 5 lbs. even in small ones. The top of the cylinder communicates with a vessel in the engine-room, which is closed air-tight at its top by a thin corrugated circular diaphragm. The bottom of this vessel is bell-shaped, so that at its top it is of considerable diameter, and the diaphragm capable of exerting considerable force when even so small a pressure as 1 lb. per square inch is transmitted from the cylinder. The gear for operating on the throttle-valve is connected to the middle of the diaphragm, and any bulging of it by the pressure causes the throttle-valve to be opened, and when the water cylinder is emptied by the rising of the ship's stern relatively to the sea, the diaphragm assumes its normal position, and the throttle-valve is closed.

Smith and Pinkney's Governor differs from both classes mentioned, inasmuch as it is neither actuated by the motion of the engine, nor by the pressure of the water. It consists of a heavy pendulum set so as to oscillate in a fore and aft vertical plane; it will consequently have motion when the ship pitches; the pendulum is connected to the valve of a small cylinder, whose exhaust communicates with the condenser, and whose valve-*box is open to the air* (with the mistaken notion that "vacuum costs nothing"); the piston of this small cylinder is connected to the throttle-valve, and is sufficiently large to easily control it even when the spindle-gland is packed tightly.

The objection to this kind of governor, in addition to the one urged against all governors not actuated by the engine shaft, is that with a "following" sea the ship may be depressed at the bows, and have the propeller fully immersed; in a short "choppy" sea, the propeller may be bare, and the ship not "down by the bow" at all, so that the governor would not check the engine from "racing."

In practice, however, it is very quick in operation, and under

the ordinary circumstances of a "head" sea answered the purpose of preventing racing admirably. It is arranged as a *pneumatic* governor, but it would be better if steam were used instead of air; there is no saving in using the latter, and it is found in practice to seriously interfere with the vacuum when the ship is exposed to a "head" sea, and tends to charge the feed-water with air to the detriment of the boiler plates, &c.

Steam Governors.—The chief cause of failure of the first marine governors was their inability to move the throttle-valve promptly when the spindle-gland was tightly packed; it was also difficult to set them so as to act efficiently when they would move at all. The difficulty was got over by limiting the function of the governor to move the small slide-valve of a small steam cylinder whose piston performs the operation of opening and shutting the throttle-valve. The governor is of ample power to move the small slide-valve with precision, and the steam cylinder can always be made of sufficient size to work the throttle-valve however tightly its gland is packed. For the purpose of working the small slide-valve, a Silver's or a Meriton's governor may be employed, and many of the old governors of this kind were converted to steam ones by the addition of a steam cylinder. But with triple and quadruple engines none of them are of much use.

Durham's and Churchill's Velometer.—The motion of the engine is communicated to this governor by a small rope of wire or Manilla on the usual pulleys; it is transmitted from the pulley-shaft to the shaft of a paddle-wheel enclosed in a cylindrical trough, by means of a bevel-wheel, whose axle is free to move about the axis of the shafts in a plane perpendicular to it, and which gears into a similar bevel-wheel on the end of each shaft. (This is similar to the arrangement provided in traction engines to admit of their going around a curve.)

The trough is filled with water or oil, which is carried around with the paddle-wheel, and causes it to resist any sudden changes of motion. The axle of the intermediate bevel-wheel is connected to the small valve of the steam cylinder whose piston operates on the throttle-valve. If the engine races so that the bevel-wheel on the pulley-shaft moves faster than that on the paddle-wheel axle, it will carry the intermediate pinion along with it, until the motion of the paddle-wheel is accelerated by it, and the pinion axle acting on the small slide-valve causes the throttle-valve to be closed. The paddle-wheel is now moving at a higher rate than its normal speed, so that when the engine has slowed down to its normal speed, the bevel-wheel axle is moved in the opposite direction, so as to cause the throttle-valve to be opened, and the engine is thus prevented from further "slowing down."

This governor, when carefully adjusted, is most sensitive, and will prevent any dangerous racing under the most trying circumstances.

Coutt's and Adamson's Governor.—This is an extension of Dunlop's principle, and differs from it by the diaphragm being caused to move the slide-valve of a small steam cylinder whose

piston operates on the throttle-valve. This has the advantages and disadvantages of Dunlop's governor, except that the work of moving the throttle-valve is done by steam.

Westinghouse Governor.—A sensitive ball governor, of very small size, is made to operate on a valve which, in opening, allows the steam on one side of the piston of a steam cylinder to escape tc the condenser, that on the other side forcing the piston to move quickly and shut the throttle-valve; the valve closes again as soon as the steam has escaped, and the steam flowing into the cylinder allows the piston to go back to its original position.

The piston here spoken of is connected to a smaller piston in another cylinder, whose function is to bring it back to its initial position.

This governor is very sensitive and acts very well, but is liable, from want of attention, to get out of order, and then fail to act at all.

Gauges.—In every engine-room there should be a steam gauge, which shall show the pressure *at the high-pressure cylinder valve-box;* a gauge which shall show the pressure in each receiver (when the engine is compound), usually called a *compound* gauge, as it is marked as a *pressure* gauge when above atmospheric pressure, and as a *vacuum* gauge when below—this gauge might, with advantage, be marked so as to show *absolute* pressure; if this were so an additional stumblingblock would be removed from the path of our "practical" engineers, and allow them to have somewhat clearer views on the question of "vacuum;" and a gauge, commonly called the vacuum gauge, which shall show the pressure in the condenser. This gauge is marked in inches, and so indicates how high the column of mercury would be in a vertical tube whose upper end is connected with the condenser, and the lower open to the atmosphere. The old original vacuum gauge was simply like a barometer, and, when replaced by the Bourdon gauge, to avoid confusion the new ones were marked in this way. To say that there is a vacuum of 12 inches, means that the difference between the pressure in the condenser and that of the atmosphere is equal to the weight of 12 cubic inches of mercury, or 6 lbs. very nearly.

It would be far simpler, and certainly more scientific, to have the condenser gauge marked from 0 to 15 lbs. *absolute;* the "compound" gauge, or that attached to the valve-box of the low-pressure cylinder, marked from 0 to 50 lbs. *absolute;* and that attached to the valve-box of the high-pressure cylinder, from 15 to 200 lbs. *absolute*, or to such limit as shall be at least 25 per cent. higher than the working pressure.

The gauges on the boilers might be marked as at present—viz., to indicate the pressure above that of the atmosphere, as it would be more difficult to train firemen to know the meaning of the new markings, and it is really immaterial to them how it is graduated, so long as they know to what mark they must keep the pointer when under steam, and that, when the pointer begins to move, on getting up steam, pressure is forming.

Care should be taken in setting the gauges in the engine-room that allowance is made for the extra pressure due to the "head" of water in the gauge pipe, which will be about 1 lb. for every 2 feet.

Lubricators and Impermeators.—To obtain perfect lubrication the supply should be steady, uniform, and continuous, or nearly so. This is true for every bearing, guide, &c., and especially true for the lubrication of the internal parts. It is usual to rely on capillary attraction to convey the oil from the oil boxes to bearings, guides, &c., by means of worsted syphons; this is a very simple, well tried, and fairly efficient method, but it has serious drawbacks; it requires constant attention, as the worsted wick syphons become clogged with gluey matter contained in some oils, and there is no definite means of *proving* that the oil is passing. An equally simple and very satisfactory plan is to fit an oil box a few inches above each bearing, in such a way that if oil is dropping from it, it can be seen or felt; there is a small cup to each oil hole leading to the bearing, and over each of these is a small nozzle from the bottom of the oil box, fitted with a small plug so as to regulate the flow of oil, or to stop it altogether; if preferred, however, syphons may be fitted instead of screw plugs, as in either case the *flow of oil can be proved.*

Cadman's Patent Lubricators.—*Over* each moving part required to be lubricated is an oil box having, projecting through the bottom, a small plug, held there by a spring, and so set that the oil box on the moving part touches the plug end, and opens it so as to let a drop of oil pass. This is especially adapted for the piston and connecting-rod brasses of a vertical engine, and for guides, &c.

Sight Feed Lubricator is for the purpose of supplying a steady and definite supply of oil to the cylinders, and is so designed that the condensed steam in a pipe, &c., leading from the valve-box, shall carry with it so many drops or globules of oil as it drains back into the valve-box again; the water condensed passes through a glass tube, near to the bottom of which the oil enters it, and the number of oil globules passing per minute may be counted, and the supply thus regulated to a nicety. This is a most ingenious contrivance, and in the hands of careful men who understand it, effects great economy, while adding to the efficiency of the engine; but in careless hands it is almost useless.

Mechanical Impermeators.—These are most successful in operation, and more reliable than any other form, inasmuch as their action is so simple that every one can understand them. Essentially there is only a force pump, having a very slow motion imparted to its ram or rams by gearing, moved by one of the working parts of the engine. The gearing generally consists of a ratchet lever worked from the valve rod of the nearest cylinder, and moving a wheel on whose axle is a worm, which gears into a wheel on the rim of a nut; this nut fits on the thread cut on the ram, and held in position by a bracket; as the nut is moved round, the ram moves slowly in or out of the chamber. The ram chamber is supplied

with oil from a small tank, and is connected by a pipe to the top of the valve-box of the high-pressure cylinder; small non-return valves are fitted, so that the oil cannot flow back to the tank, and the steam cannot force itself or the oil back into the chamber.

Drain Pipes from the cylinders and valve-boxes should lead to the condenser, so that there shall be no loss of fresh water, and no filling of the engine-room with vapour when the cocks are opened. It is customary to connect these pipes to the hot-well, which serves this purpose very well with expansive engines; but since the pressure in the low-pressure cylinder of a compound engine is only for a very small portion of the stroke above that of the atmosphere, the opening of the cocks will not get rid of the water, but only allow air to force its way back, and so reduce the vacuum. It is sometimes convenient to see if water is flowing, and so prove that the cocks are not choked; this may be accomplished by fitting a "three-way" cock to the main drain pipe, which permits communication to be made with the condenser or bilge at the will of the engineer.

Jacket Drains should always lead to the hot-well, and when the engine is working the cocks should be open sufficiently wide to just keep the jackets free of water; the hot water escaping from the jackets then helps to warm the feed-water.

Feed Heaters.—It is a most essential thing that the feed-water shall enter the boiler as warm as possible, both to effect economy of fuel and avoid wear of the boiler. Economy can only be effected *directly* by making use of heat that would otherwise be wasted for this purpose. Many attempts have been made to heat the feed-water with exhaust steam, hot gases in the uptake, &c.; but no great measure of success has attended the efforts of those who have paid most attention to this, for the apparatus employed has generally been inefficient, and its durability short. In the older expansive engines, where the temperature of the steam at exhaust was often over 230° Fah., great economy was effected by heating the feed-water in a small kind of surface condenser, placed on top of the condenser so as to intercept the hot current of steam flowing to the latter; but now with compound engines, where the temperature of exhaust is only about 180° Fah. at the most, no such means is efficient for the purpose. No doubt *some* economy is possible even under these circumstances, especially if the feed-water is permitted to remain in the heater for an appreciable time; but considering that when it leaves the hot-well it should and can be at a temperature of 130° Fah., very little more heat can be imparted to it from an external heating agent whose temperature is only 50° above it. Some day, perhaps, means will be found to avoid the loss of *latent* heat which takes place, and which is huge compared with the whole of the *sensible* heat. The exhaust steam being at 180° Fah., the total possible saving of sensible heat is now 50° Fah., while the latent heat lost is nearly 1000° Fah.

Weir's Feed Heater is designed to raise the temperature of the

feed-water to nearly 212° Fah. by means of a portion of the steam from the receiver of the compound engine. The feed-water is forced by one of the feed pumps into a chamber in such a way that it is broken up into spray, and exposed to steam from the receiver when in this state; it is still further mixed with the steam by having to fall over a number of dash plates in this chamber as it falls down and drains into the second feed-pump, to be pumped by it to the boiler. With this instrument economy of fuel is not so fully realised as increased durability of the boiler; for the steam employed to heat the feed might have been usefully employed in the low-pressure cylinder, but not to the full extent that it is in the heater, otherwise there would be no economy; and the boiler is preserved because much of the deleterious gas mechanically mixed with the feed-water is freed from it in the heater, and prevented from entering the boilers. The chief economy is probably due to hot-feed-water not retarding the circulation in the boiler: anyway, it is found easier to keep steam with the hot-feed.

Evaporators.*—The advantages of supplying marine boilers with pure water are great, and are so obvious as not to need specifying. The necessity of it was not, however, so severely felt until voyages of considerable length had been made with ships whose boilers work at pressures of 100 lbs. and upwards. The weight of water evaporated in boilers, whose working pressure is 150 lbs., is much greater in proportion to the size than was the case with those working at 75 lbs.; and the evils arising from the deposit of scale are magnified with the higher pressure and consequent higher temperature. Again, the liability to put on scale is greater, inasmuch as the losses from leakages are greater with the higher pressures. Hence, the old system of making up loss of water by a supply from the sea, although a very simple and ready one, was not by any means satisfactory, and did not remedy the evil, but rather magnified it. The Admiralty and some private shipowners tried to obviate it by providing a supply of fresh water in the double bottoms, or in tanks specially fitted for the purpose. This, however, was only half a remedy, inasmuch as the fresh water generally obtainable contained large quantities of lime and other salts which gave a hard deposit difficult to remove. Moreover, this fresh water cost money, and was so much extra weight to carry which really added to its cost. Then recourse was had to the auxiliary or donkey-boiler to obtain distilled water, which meant an expenditure of coal and labour in cleaning out these boilers after they had become coated. These small boilers very soon got so coated that they had to be stopped for a thorough clean-out; and during the time they were at work there was always the risk of damaging them. In spite of these difficulties it was found to be the most satisfactory way of obtaining an extra supply for the main boilers, and, consequently, improvement was made in this direction by supplying a small boiler, whose heat is obtained

*Samuel Hall, the inventor of the surface condenser, fitted evaporators to the boilers of ships having his condensers in 1833, and made on exactly the same principles as the modern ones.

from either the steam direct from the main boilers or from the exhaust from one or other of the cylinders.

Weir's patent evaporator (fig. 140), which may be taken as an example of this type, consists of a cylindrical shell fitted with mountings and gear similar to that on a steam launch boiler; instead of a furnace, combustion chamber, tubes, &c., it has a tubulous arrangement ingeniously contrived so that the steam is made to give up its heat to the water within the evaporator as far as possible, and the resultant water to drain away and be returned to the main condenser or hot-well. Steam is in this way raised in the evaporator, and passes from it to the main condenser or, as in naval ships, to the auxiliary condenser, the resultant water being finally pumped into the main boilers in the usual way. Sea water is pumped into the evaporator by a small donkey-pump, and the salt is blown down from the evaporator in the same way as was usual with boilers supplied with sea water. The internal tubulous apparatus is so arranged that it can be easily withdrawn from the shell for a thorough clean out when necessary. Instead of the steam from the evaporator being sent direct to the condenser, it can be made to do useful work by admitting it to the valve box of the low-pressure cylinder, and this is done by Messrs. Weir.

There are other equally ingenious and efficient evaporators, but they are all worked on the same principle of heating water and converting it into steam with steam made in the main boilers. In all cases, as is only to be expected, tubes are employed in one form or another to effect this purpose.

Ladders.—The main ladder to an engine-room should not be less than 18 ins. wide, and where space permits should be 24 ins.; the sides are of flat iron bars usually, $4 \times \frac{3}{8}$ in.; the treads or steps are of cast iron, and 10 ins. apart, and from $4\frac{1}{2}$ to $7\frac{1}{2}$ ins. wide. The inclination of the ladder to the vertical is usually about 1 in 3 with narrow, and 1 in $2\frac{1}{4}$ with broad steps; the hand rail is 1 in. diameter when of iron, and from $1\frac{1}{4}$ to $1\frac{3}{4}$ ins. when of brass; the former looks better from an engineer's point of view, is more durable, and easier kept clean. Ladders leading to the various parts of the engine are usually made lighter than the main ladder, and the steps are often formed of three "spills" or bars, $\frac{5}{8}$ in. diameter, or better still square section.

It is very essential that means be provided for the engineers to get easily and safely to every part of the engine requiring attention; these light ladders are a source of great convenience, and are amply paid for in the better attention given to the working parts.

Gratings and Platforms.—With the same object in view, good platforms to stand on, and gratings to form roads to the various parts should be provided. The engine-room platform is usually laid with either cast- or wrought-iron chequered plates, the pattern on whose face should be one which will give good foothold, and not prevent dirt from being swept from it. Some engineers prefer to have all bottom platforms made of wood, and laid over with sheet

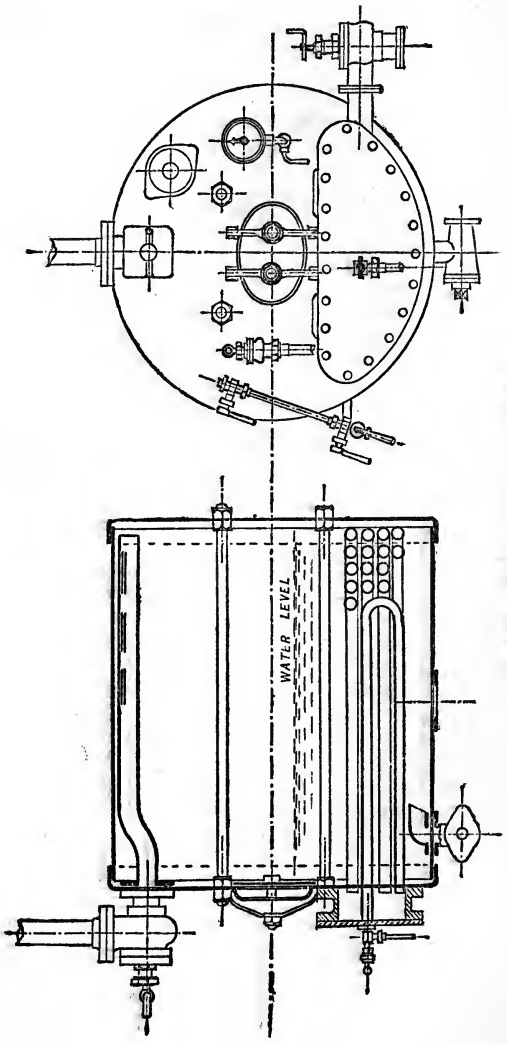

Fig. 140.—Weir's Patent Evaporator.

lead; the lead permits of good foothold, and is easily kept clean; water runs easily off it, and when in good repair it looks very well; but it is not so durable as the iron, and is very liable to damage from weights falling on it. The gangways leading to the upper parts of engines are sometimes made with chequered wrought-iron plates; but except when they are immediately over the working parts this is not a good practice, as both light and ventilation are obstructed by them, and they require constant cleaning. "Spill" gratings are, therefore, preferable in most cases, as they stop light and ventilation to only a very small extent, and require no cleaning; they are made with sides of flat bars $2\frac{3}{4} \times \frac{3}{8}$ in., and cross bars $\frac{5}{8}$ in. diameter, and spaced $2\frac{1}{2}$ ins. apart; those of large size and liable to support heavy weights have sides $3 \times \frac{7}{16}$ in., with spills $\frac{1}{4}$ in. diameter, pitched $2\frac{5}{8}$ ins.

CHAPTER XXII.

MATERIALS USED BY THE MARINE ENGINEER.

In every ship the weight of the machinery is of some consideration, and in many ships it is of the utmost importance that it be as light as possible. Reduction in weight can only be made by using material of superior strength, and by so designing the engine as to be able to employ such materials. The most marked advances in marine engineering, both in the size and quality of the work turned out, are in great measure due to the superior materials now available, and to the means possessed for converting them to the engineer's requirements. Steel, which was, only a few years ago, a scarce and expensive material, is now rapidly displacing iron, and that in some instances on the score of cheapness. Not only is the price of steel now so low that it can compete successfully with iron, but steel can be made in such large masses at such comparatively small cost, that heavy shafts are made of this material, thus rendering possible the immense engines recently constructed for the large ocean steamers. Bronzes, too, have commanded attention, for not only do they hold their own for special purposes, but, since certain kinds can be made to possess as high a tensile strength as steel, and stand hammering hot or cold, bronze is displacing steel and iron for such purposes as propeller blades, &c., in spite of its very high price.

Cast Iron.—Although steel is superseding iron in many ways, yet cast iron still remains as the material most largely used by engineers. Its appearance is so well-known as to need no description. The qualities of cast iron are very numerous, and are generally known by the district from which the ore is obtained. There still remains a distinction from mode of manufacture, as "cold blast" is distinguished from "hot blast" in other ways than that of cost.

All the pig iron of each district is, as a rule, divided into seven qualities, each of which is known by a number; that containing most free carbon, or *graphite*, is designated No. 1, that containing least No. 7.

No. 1 pig, when broken, exhibits a very coarsely granular fracture, having dark grey scales of considerable size; when melted "it runs very thin," that is, becomes extremely fluid, and on that account is used for ornamental castings and other work which requires a sharp outline, or is of very little thickness. It is not

used much by marine engineers, except to mix with other kinds, or where extreme fluidity is necessary. Castings made from it are very soft unless they are so thin that the metal has changed its character in the mould by chilling.

No. 2 pig is not so soft nor so fluid when melted as No. 1, but is not sufficiently close grained for general use.

No. 3 pig is that usually employed by the marine engineer for general purposes, as by adding some of No. 1 a mixture suitable for a complicated casting is obtained, and by adding to it some of No. 4, a harder and closer grained casting can be made.

No. 4 pig is not much used for foundry purposes, except as a means of closing the grain and hardening the metal. It also differs from the other numbers in the appearance of the fracture; they all present a highly crystalline fracture of a distinct grey colour, and on that account called *grey iron;* it shows as a grey iron at the fracture, but the grain is much finer, and there is an absence of the coarse graphitic scales so strongly marked in the other three numbers.

Nos. 5 and 6 are not used at all for foundry purposes, but made for manufacture into wrought iron; on this account they are called *forge irons*, and as the fracture is still somewhat grey in places it is called "grey forge," to distinguish it from *No. 7*, which is called "white forge," as the fracture displays a distinctly crystalline structure, very hard, and silvery white in appearance. Nos. 5 and 6 often present a mottled appearance, as if a grey iron and a white iron had been melted and imperfectly mixed; it is on this account that it is often known as "mottled pig."

It is often customary to recognise only three varieties of pig iron, viz.:—No. 1 as *grey* iron, No. 2 as *mottled* iron, and No. 3 as *white* iron; the two latter being, of course, looked on as "forge" iron, and the first as "foundry" iron.

In Great Britain there are many kinds of pig iron used by moulders, each called by the district where the ore is raised and smelted.

Scotch Iron is deemed the best for foundry purposes; it is very uniform in quality, of good strength, and will mix well. There are various brands, those of Gartsherrie, Glengarnock, Eglinton, Carron, &c., &c., being best known. The No. 3 pig is most generally used by marine engineers, as it will run sufficiently fluid to make any casting, and it can be depended on for both closeness of grain and strength.

Cleveland Iron is used very much in the Cleveland district for general work, but it is harder than Scotch iron, does not possess so much strength, and is much more brittle in consequence. A mixture of Nos. 1 and 3 is used for large work requiring strength, and this, when melted, possesses fluidity enough for the ordinary marine castings. Cleveland iron alone is not fit for large marine cylinders, columns, &c., but with the addition of hæmatite to a mixture of Nos. 1 and 3 a good casting is obtained for general purposes.

Lincolnshire Iron is about equal in quality and general description to the Cleveland.

Staffordshire, Yorkshire, Derbyshire, and **Welsh** irons are very good, but more generally used for manufacture into wrought iron.

Cumberland Iron is made from *hæmatite* ore, and the pig generally goes by the name of "hæmatite." It is generally used for steel making, but is also employed to improve other irons for foundry use. It possesses great strength and toughness, but cannot be used by itself for foundry purposes, as it does not run well when melted. 20 per cent. blended with good Scotch and English irons makes a strong mixture.

Cold Blast Iron.—Iron manufactured with air at the ordinary temperature is called by this name to distinguish it from the generality of irons which are made by heating the blast to about 700° Fah. The best known and most generally used cold blast iron is "*Blænavon,*" which owes part of its excellency, no doubt, to the good iron from which it is made. This iron possesses great strength with closeness of grain, and is used to close the grain and strengthen other irons.

Iron Mixtures.—All cast iron is improved by remelting, and the improvement continues until it has been remelted as many as twelve times; after this it falls off in strength. No important casting should, therefore, be made from new iron only, and such as cylinders, pistons, cylinder covers, &c., should be made from iron wholly remelted if the utmost strength is to be obtained. This rule, however, is only carried out when the thickness of metal is cut down to the lowest limit to save weight.

Cylinders, &c., which are subject to shock as well as to changes of temperature and severe strains, should be made of strong tough metal, and, since a good surface is required to withstand the wear of pistons and valves, the metal must have a close grain. Such cylinders, &c., should be made of a mixture of one-third picked scrap, one-third best Scotch No. 3 pig, and one-third Blænavon. If the casting is not large and complicated, the grain may be closed by adding picked scrap of a hard nature and increasing the amount of Blænavon. Some moulders add *hæmatite* to this mixture to increase the strength, but this is not often done as it decreases the fluidity.

If the cylinder is to have liners and false faces for the valves to work on, it needs only to be strong, and all *hard* materials may be omitted.

Cylinder liners and false faces require to have a fair amount of strength, and be as hard as consistent with capability of being machined. Scrap iron of close grain and hard nature is selected to add to best Scotch No. 3 pig and Blænavon; if hard scrap cannot be obtained, some No. 4 pig may take its place; if necessary, even a small portion of "white" iron may be added to give additional hardness. Hardness and strength with closeness of grain may be obtained by mixing scrap steel (shearings and punchings from

boiler plates) to the extent of even 10 per cent. As the metal becomes much stiffer on the addition of the steel, only thick plain castings can be made with it. Propeller blades and bosses may with advantage be made with a mixture containing steel in lieu of hæmatite; the quantity of steel which may be added for this purpose depends on the moulders being able to melt it.

Foundations, and other large masses which are necessarily heavier than absolutely needed for strength, may be made of a poorer mixture than suffices for cylinders; but as they are liable to shock, the iron must be of such a description as to resist this.

Specific Gravity of Cast Iron varies from 6·886 to 7·289; the average may be taken at 7·11. The weight of a cubic foot is therefore 445 lbs., and a cubic inch 0·257 lbs. A square foot of plate 1 inch thick weighs 37 lbs.

Strength of Cast Iron.—The following is the result of some careful experiments made at Woolwich Arsenal some years ago.—

	Minimum.	Maximum.	Average.
Tensile strength per square inch,	4·85 tons.	14·05 tons.	7·36 tons.
Transverse „ „ „ „	1·37 „	4·47 „	
Torsional „ „ „ „	1·74 „	3·44 „	
Crushing „ „ „ „	22·54 „	58·42 „	50·00 „
Shearing „ „ „ „	—	—	12·00 „

Good cast iron made by mixing qualities suitable for marine work, should have an ultimate tensile strength of 20,000 lbs. resistance to crushing of 110,000 lbs.; and a bar 1 inch square and 36 inches long should deflect $\frac{1}{2}$ inch without breaking with a load of 800 pounds at the middle.

Wrought Iron.—This material, which is very nearly pure iron, is made exclusively in this country by the "indirect process," that is, manufactured from cast iron by the process called puddling. The old methods of obtaining malleable iron direct from the ore, hence called the "direct process," are practised only by savage tribes, or in regions inaccessible to general trade. The Siemens method of manufacturing steel is to some extent a reversion to the "direct process," and the product is sometimes properly called *ingot iron*, to distinguish it from iron made from the "*bloom*" which is obtained by puddling.

Wrought iron is used by engineers in many forms, the principal of which are bars, plates, and forgings.

Rolled Bar Iron.—The "blooms" from the puddling furnace, after being squeezed or hammered, are rolled into bars, which are known as "*puddled bars;*" this bar iron is not used by engineers, as its tensile strength is sometimes as low as 9 tons per square inch; it is cut into pieces which are piled crossways into a "faggot" or "pile," reheated, and rolled again into bars, and now called "*merchant bar*" iron.

Merchant Bars are not used by engineers for any very important work, as the iron is still of low tenacity and not very uniform in

structure or quality. It is used for making gratings, ladders, &c., for fire-bars, bearers, &c.

Best Bar is made by reheating "faggots" of merchant bar iron, and rolling it again into bars. Its strength is now much improved, and its quality more uniform, and it may be used for general smithing purposes. Its tensile strength, if made of good material, is about 24 tons per square inch on the average; the "Best" bars of some makers will withstand as much as 26 tons per square inch.

Best Best Bar is made by again rolling bars from faggots of selected Best bars. It has now a very uniform silky fibre, will bend double cold, and has a tensile strength of 26 to 27 tons; good specimens should elongate 25 per cent. at fracture with a reduction of area of about 50 per cent. Some kinds of iron have even a higher tensile strength than this, especially when rolled into round bars. Bar iron by cold rolling is increased in strength, but the elongation is reduced. Such iron is, however, seldom or never used by engineers.

Rivet Iron should be soft and of very good quality to withstand the work put on it in the process of riveting; its tensile strength is therefore somewhat low, about 24 tons per square inch, and its resistance to shearing is even lower than this, being from 20 to 24 tons per square inch. This iron is generally made by rolling "piles" of selected scrap iron into bars, and for best quality rivet iron, the bar is rolled from "piles" of ordinary rivet iron.

Rolled Scrap Iron.—A superior quality of bar iron is made by "piling" shearings from boiler plates and rolling in the usual way; the quality of this iron, however, depends very much on that of the plates from which the shearings came.

Weight of Bars.—The specific gravity of bar iron of good quality is on the average 7·62; the weight of a cubic foot is therefore 476 pounds, and that of a cubic inch, 0·276 of a pound. Yorkshire bar iron is somewhat denser, its specific gravity being 7·76; so that a cubic foot of it weighs 485 pounds.

Angle Bar Iron.—This was formerly an important form of bar for boiler-making, but is now seldom used for that purpose; it is, however, still used extensively in the construction of smoke-boxes, uptakes, &c. The best qualities for boiler-making purposes are made from scrap iron, and should have a tensile strength across the grain of 18 tons per square inch; if angle iron will stand a strain of 16 tons per square inch across the grain, it is of *fair* quality, and may be used for such purposes as smoke-boxes, uptakes, &c.; the iron used for this purpose, however, is usually of "ship" quality.

Plate Iron.—Although steel has now almost exclusively taken the place of iron for boiler-making, iron must, for many reasons, continue to hold a place of interest for the consideration of engineers.

Yorkshire Iron.—The best kinds of boiler iron are made in South Yorkshire, in the neighbourhood of Bradford and Leeds, and known as "best Yorkshire iron." The Lowmoor, Bowling, Farnley,

Cooper & Co., Taylor, Monkbridge and Leeds Forge brands, are those recognised as of this quality: Krupp, and some other German manufacturers, make iron plates of a quality equal to this; Swedish and Russian plates are very similar to it, and in some respects of superior quality.

It is of very uniform quality, and, although not possessing a very high tensile strength in direction of the grain, it is superior to other irons in strength across the grain; it is very tough, and has great elasticity, so that it is easily flanged and bent, and stretches very considerably before breaking. For these reasons, it was most valuable for boiler-making, and notwithstanding its high price (on the average three times that of ordinary boiler plates) it was always used for those parts of a marine boiler exposed to flame.

From the method of manufacture, however, this iron is peculiarly liable to lamination, which, while being harmless in plates subject only to tensile strain when cold, is a very objectionable feature when being flanged, and is still more so in furnace and combustion chamber plates; for when such plates are exposed to the heat for a lengthened period, blisters are formed, which get burnt by the fire when on that side of the plate, and tend to crack the plate; blisters are always troublesome, and have to be cut out.

"Lowmoor quality" plates have a tensile strength of 24 to 25 tons with the grain, and 22 to 23 tons across it; the elongation being 13·5 and 8 per cent. respectively. From some carefully made experiments, Mr. Kirkcaldy found the average strength of Yorkshire iron to be 21·3 tons with and 20·1 across the grain, the elongation being 16·7 and 11·2 per cent.; by annealing the plates the strength was slightly *reduced*, but the elongation was raised to 18·4 and 12·8 per cent. The elastic strength was also found to be 12·2 tons in tension, and in compression 11·5 to 13·3 tons.

In all calculations this quality of iron may be assumed to have an elastic limit of 26,500 lbs. per square inch in tension, and 26,000 lbs. in compression, and an ultimate strength of 54,000 lbs. when in tension.

Its specific gravity is 7·76; the weight of a cubic foot is 485 lbs., and that of a cubic inch is 0·281 lbs.

Staffordshire Iron.—This iron, although slightly inferior to best Yorkshire, is still of high quality, and was used for boiler shells, domes, &c., and for such parts of the furnaces and chambers as were not exposed to the direct action of flame. It has a high tensile strength with the grain, but is not so strong across the grain as is the Yorkshire iron. Sir William Fairbairn, in 1861, found that some Best Best Staffordshire plates had an ultimate strength of 26·7 tons with and 24·47 tons across the grain, the elongation being 6·7 and 4 per cent.; that common Staffordshire plates had an ultimate strength of 22·7 tons with and 23·5 across the grain, the elongation being 5 and 4·35 per cent. The large boiler plates of *best* Staffordshire quality, as now rolled, are found to have an ultimate strength of 23 tons with and 19 across the grain—it is only the thinner

plates that possess so high a strength across the grain; the ordinary qualities of Staffordshire boiler plate, when $\frac{3}{4}$ inch and upwards in thickness, rarely have a tensile strength over 18 tons across the grain.

For purposes of calculation, the ultimate strength of Staffordshire quality boiler plates may be taken at 51,500 lbs. with, and 43,000 lbs. across, the grain for plates under $\frac{3}{4}$ inch thick; and at 50,000 lbs. with, and 40,100 lbs. across, the grain for plates over that thickness.

The specific gravity is 7·68, the weight of a cubic foot being 480 lbs., and that of a cubic inch 0·277 lb.

Durham Iron is more difficult to classify, as now there are made in this county some kinds of iron equal in quality to best Yorkshire, and very similar to it in structure, &c., while, on the other hand, some of the plates (used, of course, for ship purposes) are of the worst possible description.

Cleveland Iron.—As plates are made in North Yorkshire, and in various parts of Durham, from this iron, it is better to deal with it under this name, rather than by the name of the district in which the plates are rolled. The plates usually sold for boiler-making purposes, were far inferior to those of Staffordshire make; they were hard and brittle, and required careful usage on the part of the boiler smiths; from its containing considerable proportions of phosphorus, it is "cold short," that is, liable to fracture across when worked cold; for this reason all serious operations on this iron must be conducted while it is hot, as even punching very often causes it to crack from the hole, and plates which have been punched will break through the holes while being bent in the rolls.

The ultimate tensile strength of this iron is only at best 22 tons with and 18 across the grain, and the commoner descriptions of boiler plate have an ultimate strength of 20 to 21 tons with and 17 tons across the grain; and the elongation is very small.

Some very good kinds of boiler plates have, however, been turned out by some ironmasters in these districts, by adding Spanish or other equal good iron to the Cleveland iron; the plates are then much tougher and softer.

Scotch Iron (*Lanarkshire*).—The plates made from this iron are inferior to the Staffordshire brands, and although resembling somewhat in their characteristics the Cleveland plates, they are not quite of so low strength, nor so brittle.

Their tensile strength is 21 to 22 tons with and 18½ tons across the grain, with an elongation of 7 and 3½ per cent. only.

No iron plates should be used in the construction of a boiler whose ultimate strength is less than 22 tons with and 18 tons across the grain, and whose elongation is less than 9 per cent. with and 5 per cent. across the grain.

Iron Forgings.—Iron forgings, such as shafts, rods, &c., are made from scrap iron, and their strength depends very much on that of the iron from which the scrap was cut. Sometimes forgings have been made from new iron, but this is seldom done now. The

method of manufacture is similar to that described for making rolled bars from scrap; the scrap is sorted, piled, brought to a welding heat, and hammered into slabs; the slabs are piled one on the other, and reheated to form the forging required. The best description of forging is made by rolling the slabs into bars, so as to give the metal *grain;* the bars are then cut into short lengths, piled, and hammered again into slabs, which are piled, &c., as before, to form the forging. This rolling into bars, in addition to giving the iron fibre, tends to give a more uniform structure to the forging, and a homogenity which cannot be obtained by the simple piling process.

The strength of forged iron depends also on the extent to which it has been worked under the hammer, and it is no doubt also considerably affected by the heat to which it has been exposed during the forging. The weakness of some forgings is often due to the continuous exposure to very high temperature in the reheatings, so often necessary in producing a heavy piece of work.

From some experiments made by the Mersey Steel and Iron Co., on portions of iron cut from a crank-shaft, the tensile strength was found to be 22·4 tons, with an elongation of 25 per cent. The iron in this case was, no doubt, exceptionally good, and the forging sound. The strength of forgings made from good scrap iron is probably 22 tons per square inch with the grain, and 19 tons across, when they are of simple form and moderate size; when of large size, or of complicated form, like a crank-shaft, the strength seldom exceeds 21 tons with, and 18 tons across the grain. The elongation with good iron should be at least 15 per cent. with and 8 per cent. across the grain; higher elasticity is often found when forged from the scrap of good quality soft iron.

The specific gravity of large forgings is about 7·63, so that the weight of a cubic foot is 477 lbs., and that of a cubic inch is 0·276 lb.

Steel.—Steel, like iron, is used in the form of bars, plates, and forgings, and is also now very generally employed for castings where great strength is required.

Steel was originally made from the best qualities of wrought iron, by the process of "cementation;" this consists of exposing small pieces of iron to a high temperature in the presence of carbon only for a considerable time, during which some of the carbon is absorbed by the iron, and is thus converted into a rough kind of steel, called *blister steel.* These pieces are broken, and sorted according to the appearance of the fracture, after which they are placed in a closed crucible, melted, and cast into ingots; it is now called *cast steel.* If the blister steel is piled and hammered, or rolled into bars, it is called *shear steel.* The cast steel ingots are rolled into bars, which still retain the name "cast steel," but this is better known as *tool* steel, as it is now used almost exclusively for cutting tools. Tool steel is, of course, very hard, and has a very high tensile strength, ranging from 50 to 65 tons per square

inch, with an average elongation of a little over 5 per cent. only; some of the milder kinds, such as are used for drifts, &c., have a tensile strength varying from 44 to 60 tons per square inch, with an average elongation of 13 per cent. *Spring steel* is still milder, having a tensile strength of about 33 tons per square inch, with an elongation of 18 per cent. Tempering increases the strength considerably; Mr. Kirkcaldy found that a steel bar, whose strength when "soft" was $54\frac{1}{4}$ tons, when heated and cooled in oil had a strength of 96 tons.

Bessemer Steel.—The modern methods of making steel known as the *direct processes*, obviate the necessity of using the comparatively expensive wrought iron, and are therefore capable of producing a very much cheaper material. In the Bessemer process, there are essentially two operations, the conversion of molten *cast* iron into *pure* iron, and, by the addition of a small and definite quantity of carbon, the turning of pure iron into steel. Cast iron free from phosphorus, and comparatively free from sulphur, is melted and poured into the converter; a strong blast of air is forced through the molten metal, so that the carbon it contains is consumed, and the temperature of the mass thereby raised; when the whole of the carbon is consumed, a small quantity of *Spiegeleisen*, an iron containing a known portion of carbon and manganese, is added; the metal now has that small amount of carbon which causes it to differ from wrought iron, and that still smaller amount of manganese which seems to be so essential in making good steel. The metal is now run into ingot moulds, and allowed to cool for further use, or is reheated and hammered, or rolled into the forms required. By the Thomas-Gilchrist process fairly good steel can be made from iron containing phosphorus; the phosphorus is absorbed by the converter lining, which is prepared from magnesian limestone; the product is known as *basic* steel, the original being called *acid* steel.

Siemens-Martin Steel.—The steel in this process is made in the hearth of a reverberatory furnace, heated by gas to an intense violet heat, by the mixing of certain quantities of wrought and cast iron, or by mixing cast iron and certain kinds of iron ore. The carbon and manganese are added as in the Bessemer process by the introduction of a small quantity of *ferro-manganese*, a somewhat similar substance to *Spiegeleisen*. The latter is now the most general method adopted for producing steel on a large scale, and is one by which steel of good and uniform quality is made at a comparatively low cost.*

At the present time steel plates, bars, and forgings are made almost exclusively from ingots run from either Bessemer converters or Siemens furnaces.

Puddled Steel.—Some years ago this material commanded considerable attention, since from it large shafts were made at what were then comparatively low prices, and it was thought that, from its superiority to wrought iron, it would take the place of the latter

* Basic steel of excellent quality is made in the Siemens furnace, and such as can compete in price with Bessemer.

for forgings. To all intents and purposes, it was only "puddled" bar, containing more carbon than that used in making wrought iron, and was obtained by prematurely withdrawing the bloom before decarbonisation was completed.

The Steel used for Boiler Construction is made by either the Bessemer or Siemens-Martin process, and for marine purposes generally by the latter exclusively. The ingots are reheated and hammered into slabs, which are again reheated and rolled into bars or plates. It is necessary that the material of which a boiler is constructed shall have very considerable elasticity as well as strength, and since best Yorkshire iron stretches to as much as 18 per cent. before fracture, steel should not be used which will not yield to this amount.

It is found that the lower the ultimate strength of steel is, the higher is its elasticity, so that plates of this material, having an ultimate elongation of 20 per cent., possess a tensile strength of 30 tons per square inch only. Such steel is very suitable for the shell plating of boilers, as its strength is nearly 50 per cent. higher, and its elasticity nearly double that of the iron generally used by boiler-makers.

The internal parts of a boiler require to be of a somewhat softer material, that it may be flanged, &c., with ease, and stand the rough usage of the boiler smiths with safety. For this purpose plates are used which have a tensile strength of 26 to 28 tons per square inch, with an ultimate elongation of about 25 per cent. Such plates are then 20 per cent. stronger, and stretch about 40 per cent. more than the average Yorkshire quality of iron used for this purpose.

The elastic limit of such mild steel is about 17 tons, as against the 13 tons of Yorkshire iron.

Sir Joseph Whitworth & Co. manufactured plates from their patent compressed steel which have a tensile strength of 32 tons, with an ultimate elongation of 34 per cent.; and those having an elongation of 26 per cent. have an ultimate strength as high as 42 tons. Such plates, however, cost too much to manufacture to compete successfully with Siemens and Bessemer steel.

Ordinary mild bar steel, such as used for the stays of boilers, for bolts, studs, &c., has a tensile strength of 30 to 32 tons, with an elongation of 27 to 25 per cent., and a harder steel for pins, &c., has 35 to 40 tons, with 15 per cent.

The specific gravity of mild steel plates and bars is about 7·86; the weight of a cubic foot is 491 lbs., that of a cubic inch is 0·284 lb., and that of a square foot, one inch thick, 40·94 lbs.

Steel Forgings.—Shafts, piston and connecting-rods, valve rods, gudgeons, &c., are now often made of steel forged from ingots manufactured by the Bessemer and Siemens processes. The steel is, of course, of a mild kind, and while possessing properties very similar to those of the rolled bars and plates, is not quite so uniform in structure and strength.

Axles hammered from Bessemer steel have a tensile strength of about 33 tons, with an elongation of 12 per cent.; those hammered

from crucible steel had, when made of that material, a tensile strength of 40 tons, with an elongation of nearly 9 per cent.; the elastic limits were 22 tons and 25½ tons respectively. The results of tests made on pieces of steel cut from two crank-shafts manufactured by Krupp of Essen, gave the elastic limit at nearly 19 tons, the ultimate strength at 41½ tons, and the ultimate elongation at nearly 12 per cent.

Some recent experiments with cuttings from a steel crank-shaft, gave the elastic limit at 13½ tons, the ultimate strength 30 tons, and the elongation 26 per cent.

There is little doubt that the ultimate strength of marine shafts, when made of steel, does not exceed 35 tons on the average, and those over 12 inches diameter cannot be depended on for a higher average than 30 tons, however well forged. The material near the centre of a steel forging of large size remains but very little affected by hammering, so that the larger the diameter of the shaft, the less will be the average strength of the material composing it. Forgings made with a hydraulic press are, however, free from this suspicion.

Small steel forgings may have as high a tensile strength as bars rolled from similar ingots, but as a rule they have not so great elasticity, and it is safer, therefore, to suppose them to be 10 per cent. weaker, for purposes of calculations, although, as a matter of fact, their tensile strength is sometimes higher.

Steel Castings.—Many parts of a marine engine which were formerly made of forged iron, are now made with advantage of cast steel; other parts which, for convenience of manufacture, were made of brass, are also made of this material. It is likely to supersede cast iron in many parts which must of necessity be cast, and as the cost of production of cast steel is reduced, so will the demand for it increase.

The chief obstacle to its further extended use is the uncertainty as to the soundness of the castings. Continued use, however, is fast dissipating the prejudice which once existed against its application, and as the demand for these castings has caused the manufacturers of them to give the closest attention to their production, the day is not far distant when a steel casting will command the same confidence as to its soundness that now obtains for iron castings. Indeed, an iron casting is more treacherous than one of steel, because blow-holes and spongy places are always near the surface of the latter, and can be detected, while those in the iron castings are quite hidden. If a steel casting is machined, so that the faulty places are cut away, the part remaining may be depended on as quite sound.

Propeller blades and bosses, foundations, columns, levers, cross-heads for piston-rods, pistons of all sizes and shapes, link-motion blocks, eccentric straps, worms, wheels, &c., are now very generally made of cast steel; crank-shafts, too, have been made of cast steel, and so far work very satisfactorily, even when of so large a size as 15 inches diameter; connecting-rods, also, have been

made of this material, and the economy of production of such parts when thus made is beyond all doubt. For large shafts it is a very suitable material, as its strength at the centre is as high as that at the circumference, whereas this is not always the case with large forgings.

The probable *average* strength of best steel castings is about 28 tons per square inch, with an elasticity of about 25 per cent.; greater strength is easily obtained with steel castings, but the elasticity will then be much lower, in fact, it is only by using very carefully selected materials, and by annealing after casting, that *so low* a strength can be obtained. The ordinary steel castings have an average ultimate strength of about 32 tons, with an elongation of about 18 per cent. when sound. To provide for unsoundness the ultimate strength may be assumed to be only 28 tons for the harder varieties, and 25 tons for the softer ones; for propeller blades it should not be assumed to be higher than 24 tons, although the sound parts of such castings are often found to have a strength of over 30 tons per square inch.

Copper.—This metal is used to form alloys more frequently than by itself; it is too soft for general purposes; but as it is so much improved by the addition of even small quantities of other metals, it is perhaps, next to iron, the most important of the metals used by the marine engineer.

In its simple state it is employed chiefly for pipes on account of its ductility and strength, and in some measure because it can be joined by brazing, so as to be as strong there as the original sheet. It does not generally corrode under the action of sea-water or air, but does sometimes waste by the mechanical action of water and steam moving at high velocities over its surface. In some few localities the water seems to have a destructive effect on this metal, owing no doubt to presence of free gases mechanically mixed with it; of these gases, sulphuretted hydrogen is the worst in the water of rivers and ports, and chlorine in sea-water; the presence of bromine, too, is often detected by the smell in the hot-wells of some engines.

Copper pipes of large size (6 inches and upwards) are always made from sheets, curved into the required form by rolling or hammering, and brazed at the seams.

Smaller pipes are sometimes made in the same way, and sometimes by "drawing" in a way similar to that by which wire is manufactured. The feed, blow-off, and scum pipes in the Navy are always of solid-drawn copper, because there shall be no seam in such important pipes; and latterly, the main steam pipes have also been made solid-drawn.

Solid-drawn pipes are very seldom used in the mercantile marine, partly because they are somewhat more expensive, but chiefly because they are not so uniform in thickness as are the brazed ones, and are more liable to split unless carefully manufactured from very soft tough copper.

The strength of copper depends somewhat on its quality, but principally on the amount of work it has undergone. Copper castings have an ultimate strength of only about 10 tons per square inch; when forged its strength is increased to about 15 tons, and when rolled into bars is 16 tons; if a small proportion of phosphorus is added (about 2 per cent.) the strength is increased to 20 tons; pure copper when drawn out into wire has a strength of about 28 tons before, and 18 tons after annealing. Sheet copper has an average strength of about 13½ tons, and for purposes of calculation may be assumed to be 30,000 lbs. per square inch.

The specific gravity of sheet copper is 8·805; the weight of a cubic foot is 550 lbs., that of a cubic inch 0·318 of a pound, and that of a square foot 1 inch thick 45·83 lbs.

Tin.—This metal, although seldom used alone, is very important, as forming one of the chief constituents of bronze or gun-metal. The best qualities are obtained from Cornwall, and the chief supply of this metal is from that county; of late years, however, considerable quantities have been imported from the Dutch East Indies and from Australia, and although not so pure as the Cornish tin, the price of the latter has been very considerably reduced by the supply.

Tin is used as a protective covering to other metals on account of its immunity from the corrosive action of salts and acids. The Admiralty require all condenser tubes to be coated with tin when fitted in iron condensers; and this practice is also followed by some Mercantile Shipping Companies. Sheet tin, which is thin sheet iron coated with tin, is used for "liners" between "brasses," as well as for making oil feeders, lamps, cups, &c.

Tin mixed with small quantities of copper, antimony, &c., is used under the name of white metal to line and face bearings.

The tensile strength of tin is too low to admit of its being used alone in construction; its ultimate strength when cast is only 2·11 tons per square inch. Its specific gravity is about 7·3, consequently the weight of a cubic foot is 456 lbs. and that of a cubic inch 0·264 lb.

Zinc or Spelter.—This metal also is seldom used alone, but is very largely employed to alloy with copper to form brass. The best kinds are imported from the Continent, and the Silesian spelter is that generally used in making brass for rolling into sheets or drawing into tubes, pipes, and rods.

In its simple state zinc is used by marine engineers to prevent corrosion in the boilers and hot-wells. Cast blocks, or, better still, pieces of rolled bar or sheet of this metal are placed in metallic contact with the iron of the boiler in such places as have been found by experience to require protection. The purer the zinc is, the more perfect is the protection afforded; but unless there are exceptional circumstances affecting the feed-water, common zinc or even "hard spelter" (residuum from the galvanising bath) will form a sufficiently strong galvanic couple to prevent deterioration of the iron surfaces.

Zinc is also employed as a covering for iron, to protect it from the action of sea-water, &c., and being much cheaper than tin, and easily applied to the surface of the iron, is used on a far more extended scale than tin. Zinc is also used as the principal constituent of some kinds of white metal made for bushes working in water.

The tensile strength of zinc is even lower than that of tin, being only 1·336 tons per square inch when cast. Its specific gravity is 7·0, consequently the weight of a cubic foot is 437 lbs., and that of a cubic inch, 0·253 lb

Lead is nearly always used alone, and the purer it is, the more valuable for engineering purposes. In the mercantile marine the bilge piping is generally made of lead, and the pipes for emptying and filling the ballast tanks are also generally of lead. It is used for these purposes because of its resisting the corrosive action of sea and bilge water, and being very ductile it can be easily bent to follow the curves and corners of the ship's bottom.

Sheet lead is used to protect the covering of boilers from wet, and also to cover engine-room floors when made of wood. It is employed, too, for jointing pipes, &c., when the flanges are rough and uneven.

It is sometimes used by moulders to give a good colour to common brass, and to cause it to be readily turned in the lathe; but even the smallest addition of this metal tends to reduce the strength of brass, and it should be therefore generally avoided.

The tensile strength of sheet lead is only 0·81 ton per square inch, and that of lead pipe is 1 ton. The specific gravity is 11·418, consequently the weight of a cubic foot is 712 lbs., of a cubic inch 0·412 lb., and of a square foot 1 inch thick, 59·3 lbs.

Aluminium.—This metal, formerly so rare and very expensive, is doubtless destined to become a very important one to marine engineers from its extreme lightness, and its power of resisting corrosive action. Its price when introduced (about £1,000 per ton) quite precluded its use, even to form an alloy; but to-day, when it can be purchased at £280 per ton, engineers are using it freely to make bronze, which is as strong and elastic as mild steel, and with the addition of 7 per cent. of copper it is rolled into sheets and bars having a fair strength and incorrodable.

In the pure state when drawn into wire, it has a tensile strength of about 8 tons per square inch; by hammering cold, the strength is raised from about 7 tons (as cast) to about 12 tons. An alloy of 90 per cent. of copper, and 10 per cent. of aluminium, when rolled, has an ultimate tensile strength of 32 to 40 tons per square inch. The specific gravity of aluminium is only 2·6, consequently a cubic foot weighs 162 lbs., a cubic inch 0·096 lb., and a square foot 1 inch thick, 13·5 lbs.

Antimony is used in very small quantities, to harden other metals and alloys.

Alloys.—Strictly speaking, only alloys of copper and zinc can be called *brass*, but ordinary bronze as made for bearings, liners, and bushes, is often called brass, and from these circumstances the liners of journals and pin-bearings are called "brasses." Alloys of copper and tin, or those of copper and tin together with zinc or other metal, are called *bronze*.

Brass.—*The yellow brass* used for ornamental castings is usually composed of two parts of copper and one part of zinc; when carefully made, castings of yellow brass have a tensile strength of 12 to 13 tons, but the ordinary yellow brass, as supplied by founders, has a strength of only 10 to 11 tons; it is fairly tough, but too soft for general purposes.

Muntz's Metal, composed of three parts of copper and two of zinc, can be rolled out into bars and sheets, so as to have an average tensile strength of 22 tons per square inch, and, in some cases, bars of this metal have a strength as high as 27 tons. It is very ductile, and can be forged when hot; it will stretch very considerably before fracture, and may be used for springs when hammered or cold rolled, and not annealed. Its specific gravity is 8·2, consequently a cubic foot weighs 512 lbs., that of a cubic inch 0·28 lb., and that of a square foot 1 inch thick is 42·7 lbs.

Naval Brass.—By the addition of about one per cent. of tin to Muntz's metal, it has the power of resisting the action of sea-water, while retaining all its other properties. Such metal is known as *naval* brass, because of its extensive use in the construction of naval composite ships, and for the bolts of the engine-fittings which are exposed to sea-water in war-ships. This metal can be forged hot, and bent cold two double; its strength is rather superior to the ordinary Muntz's metal, and some specimens rolled cold and unannealed have been proved to have an ultimate strength of nearly 40 tons per square inch.

Brass Tube Metal.—The ordinary brass condenser-tubes are made of a composition containing 70 per cent. of copper and 30 per cent. of zinc, but the Admiralty require them to be composed of 70 per cent. of best selected copper, 29 per cent. of Silesian zinc, and 1 per cent. of tin, and all tubes supplied to the Navy have to undergo the test described on page 236.

Boiler tubes for the Navy are made of a composition of 68 per cent. of best selected copper and 32 per cent. of zinc. The strength of the metal of tubes made with 70 per cent. of best selected copper and 30 per cent. Silesian zinc is as high as 36 tons per square inch.

Gun-Metal or **Bronze.**—There is no particular mixture to which this name belongs, as it is applied promiscuously to any composition of copper and tin, or copper, tin, and zinc.

The best known composition, and one which has high strength, is fairly hard, and very tough, is that containing 90 per cent. of copper and 10 per cent. of tin. Its tensile strength when

carefully made is 17 tons per square inch: its specific gravity is 8·66, consequently a cubic foot weighs 561 lbs., a cubic inch 0·325 lb., and a square foot 1 inch thick, 46·8 lbs. To insure sound castings, however, it is necessary to add a small quantity of zinc.

A much harder metal is made by mixing 84 per cent. of copper with 16 per cent. of tin; its tensile strength is 16 tons, specific gravity 8·56, and the weight of a cubic foot is 534 lbs.

For heavy bearings where hardness is of more importance than strength, although the metal must not by any means lack strength, a good metal is made by mixing 79 per cent. of copper with 21 per cent. of tin; its tensile strength is nearly 14 tons when carefully made, and the average is 13½ tons; the specific gravity is 8·73, and the weight of a cubic foot is 544 lbs.

Admiralty Bronze.—The mixture specified for propellers and all bronze castings, &c., of war-ships is 87 per cent. of copper, 8 per cent. of tin, and 5 per cent. of zinc. When carefully made, this metal has a tensile strength of 15 tons, and the average strength of castings is about 13½ tons.

Phosphor Bronze.—This metal is composed of copper and tin, with a small proportion of phosphorus. It is harder than the ordinary bronze, very close grained, and of superior strength. The average ultimate strength is about 15½ tons per square inch, while that of some specimens is as high as 22 tons; it is, however, very "red short," and when heated is liable to crack. Great care is required in melting, and repeated meltings very much reduce its virtue. It may be rolled out into extremely thin sheets, or drawn into wire, when the average tensile strength is 56 tons per square inch. Phosphor bronze sheet is used for the valves of air-pumps (*vide* page 254).

This metal is used for bearings, brasses, propeller-blades and bosses, pump-rods, &c.

Manganese Bronze.—This metal is good bronze improved by the addition of ferro-manganese. The manganese is said to deoxidise any copper oxides which may be mechanically mixed with the copper, so "rendering the metal more dense and homogeneous." The No. 1 quality, which is used for forgings and rolling into rods, plates, sheets, angles, &c., when cast in metal moulds has an ultimate strength of 24 tons, and an elastic limit of 14 tons per square inch.

Rolled rods, plates, &c., have, when mild, an ultimate strength of 28 tons, and an elongation of 40 per cent.; but when so required it can be made with an ultimate strength of 30 to 32 tons, an elastic limit of 15 to 17 tons, and an ultimate elongation of 15 to 20 per cent.

By cold rolling the strength can be raised to even 40 tons, but the elongation is then reduced to 10 per cent.

There are various other qualities of Manganese bronze manufactured to suit the different requirements of engineers.

This metal can be rolled, drawn, and forged, is very tough as well as strong, and is, therefore, a very valuable one for the marine engineer.

It is largely used now for propeller blades, as by employing it they can be made very much thinner than if of ordinary bronze, or even cast steel.

Delta Metal.—The invention of Mr. Dick is a high-class bronze, somewhat similar to manganese bronze, but rather harder and with a higher tensile strength. Castings made from it have an ultimate strength of 34 tons, and resist torsion better than the other bronzes, which are, as a rule, disappointing in this respect.

Parson's White Brass.—This is a most valuable material for facing and lining bearings; the composition of No. 2 quality is tin, 68; zinc, 30·5; copper, 1; and lead, 0·5; its success as a bearing metal is most unqualified, and it does well in crank-pin brasses to moderate speeds.

Babbit's White Metal.—This was, for very many years, almost the only white metal used for bearings, and until late years was without a rival. It is composed of 10 parts of tin, 1 of copper, and 1 of antimony.

A very good white metal is made by mixing 6 parts of tin with 1 of copper, 6 parts of tin with 1 of antimony, and adding the two mixtures together.

Fenton's White Metal, which is used for stern bushes and the bushes of paddle-wheels, &c., is composed of 8 parts of zinc, 1·66 of tin, and 0·44 of copper; it is fairly tough and hard, and in sandy water resists wear exceedingly well.

Stone's White Bronze is also an excellent metal for bearings and crank-pin brasses, especially of heavy engines running at high speed.

Stone's Bronze.—This metal has qualities which render it very suitable for propellers, &c.; its ultimate tensile strength is about 32 tons when cast in sand: the elastic limit is also high—viz., 17 tons. It can be rolled and forged at a dull red heat.

Basileus' Metal is white, in appearance like silver, it takes a high polish and resists the action of damp air, sea water, and weak acids. In the cast state its ultimate strength is 14½ tons, and its limit of elasticity 9 tons. When rolled into sheets it has an ultimate strength of 32 tons, and in wire 37½ tons, with an elongation of 26 per cent.

Richard's Plastic Metal.—This is a white metal containing bismuth, and as it melts at a moderately low temperature it can be worked with a soldering-iron. It is very useful, therefore, for mending bearings and for coating damaged brasses; it also does for a filling metal, working well in bearings and guides.

TABLE XXVII.—Weight of Machinery.

a. *As fitted on board certain Naval Ships and Yachts, &c.*

General Description of Engines.	Cylinders.		Horse Power.		Boiler Pressure.	Weight of					Weight per	
	Diameter.	Stroke.	Nominal.	Indicated.		Engines.	Boilers, &c.	Water.	Spare Gear.	Total.	N.H.P.	I.H.P.
	inches.	ins.			lbs.	tons.	tons.	tons.	tons.	tons.	tons.	tons.
Screw Horizontal Trunk Surface-Condensing, Simple,	2 of 127	54	1200	7187	30	545	359	156	52	1202	1·00	·167
Screw Horizontal Return Connecting Rod Surface-Condensing, Simple,	2 of 98	48	800	4900	30	344	233	101	36	714	·893	·146
Twin Screw Horizontal Ret. Connecting Rod Surface-Condensing, Simple,	4 of 72	36	800	4914	30	393	235	101	21	750	·937	·153
Screw Horizontal Ret. Connecting Rod Surface-Condensing, Compound,	56 and 90	30	350	2018	50	147	125	54	13	339	·97	·169
Do. do. do.,	57 and 90	33	350	2100	60	156	128	52·8	13·2	350	1·00	·167
Do. do. do.,	31 and 48	18	60	400	60	34·5	29·5	11·1	4·48	79·6	1·33	·199
Screw Horizontal Ret. Connecting Rod Surface-Condensing 3-Cylinder, Simple,	3 of 55	30	300	2170	30	129	62	45	incl.	236	·787	·109
Twin-Screw Vertical Direct Acting Surface-Condensing, Expansive,	4 of 20	12	50	310	60	32	22·5	12·5	incl.	67	1·34	·216
Do. do. do.,	4 of 11	11	20	110	60	9·15	9·6	3·75	incl.	22·5	1·13	·205
Screw Launch Vertical Direct Acting Surface-Condensing, Compound,	13½ and 2 of 15	16	...	460	120	...	...	...	...	9·0	...	lbs. 43·5
Do. do. do.,	12¾ and 21	12	...	455	120	...	...	...	...	11·7	...	57·7

WEIGHT OF MACHINERY—*Continued*

b. *As fitted on board certain Merchant Ships.*

(SINGLE SCREWS).

GENERAL DESCRIPTION OF ENGINES.	CYLINDERS.		HORSE POWER.		Boiler Pressure.	WEIGHT OF						WEIGHT PER	
	Diameter.	Stroke.	Nominal.	Indicated.		Engines.	Boilers.	Funnel and Mountings.	Water.	Spare Gear.	Total.	N.H.P.	I.H.P.
	inches.	ins.			lbs.	tons.	tons.	tons.	tons.	tons.	tons.	tons.	tons.
Single Screw Vertical Direct-Acting Surface-Condensing, Compound, ...	46 and 87	57	400	2300	80	242	100	29	80	29	480	1·20	·209
Do. do. do., .	43 and 86	60	420	2400	80	262	128	31	104	12	537	1·28	·224
Do. do. do., .	34 and 68	63	275	1473	80	162	62	27	61	6	318	1·16	·216
Do. do. do., .	38 and 76	48	270	1550	80	142	80·8	34·5	64·5	12·2	334	1·24	·215
Do. do. do., .	32 and 64	63	250	1306	80	151	58	24·6	61·	5·4	300	1·20	·229
Do. do. do., .	40 and 74	48	250	1560	80	154	61·6	22·3	55	15·1	308	1·23	·197
Do. do. do., .	40 and 72	45	220	1320	80	144	64·5	20·5	44·2	16·8	286	1·30	·216
Do. do. do., .	35 and 69	39	180	1250	90	105	54·8	21·7	41·9	7·6	230	1·28	·184
Do. do. do., . 3 Cranks, . . .	20½ 33 and 58	36	140	700	150	96	46·5	12·8	27·	6·7	189	1·35	·269
Do. do. do., . 2 Cranks, . . .	21 32 and 56	36	130	650	110	84·2	34·0	14·4	25·8	6·6	165	1·27	·247
Do. do. do., .	25 and 50	45	130	750	90	84·5	34·7	13·8	28·5	6·5	168	1·29	·224
Do. do. do., .	30 and 55	36	125	700	85	82·6	33·6	11·8	26·4	6·6	161	1·29	·230
Do. do. do., .	27 and 53	33	110	730	80	53·2	41·0	10·7	25·5	...	130·4	1·19	·179
Do. do. do., .	24 and 45	33	90	561	80	50·3	26·5	8·7	24·9	8·8	119·2	1·32	·212
Do. do. do., .	23 and 44	24	70	430	75	31·7	21·9	7·5	17·5	...	78·6	1·12	·183
Do. do. do., .	21 and 40	27	60	373	80	30·2	20·0	4·7	13·3	...	68·2	1·14	·183
Do. do. do., .	17 and 32	18	35	185	75	14·4	10·6	2·5	9·0	...	36·5	1·04	·197

WEIGHT OF MACHINERY—*Continued.*

C. *As fitted on board certain Ships.*

(PADDLE, TWIN SCREWS, AND SINGLE CRANKS).

General Description of Engines.	Cylinders.		Horse Power.		Boiler Pressure.	Weight of					Weight per	
	Diameter.	Stroke.	Nominal.	Indicated.		Engines.	Boilers.	Funnel and Mountings.	Water.	Spare Gear.	Total.	N.H.P.	I.H.P.
	inches.	ins.			lbs.	tons.	tons.		tons.	tons.	tons.	tons.	tons.
Paddle, Oscillating Jet-Condensing,	2 of 96	84	750	4160	26	330	230		170	...	730	·973	·175
Paddle, Oscillating Surface-Condensing,	2 of 80	84	600	3600	30	244	175		74	24	517	·862	·144
Paddle, Oscillating Jet-Condensing,	2 of 64	54	250	1750	32	102	100		37	13	252	1·01	·144
Paddle, Compound Oscillating Surface-Condensing,	34 and 57	42	130	700	60	72	35		19	1	127	·980	·182
Paddle, Diagonal Surface-Condensing,	1 of 21½	36	40	166	80	9·7	5·2		1·8	...	16·7	·442	·110
Twin Screw, Vertical Compound Surface-Condensing,	2 of 30 2 of 57	36	270	2000	80	191	91	24	65	9	380	1·41	·190
Do. do. do.,	2 of 23 2 of 44	27	150	850	85	78·3	47·1	10·8	31·3	5·5	173	1·15	·203
Do. do. do.,	2 of 21 2 of 40	27	120	774	80	68·2	38	10·9	24·9	...	142	1·18	·183
Do. do. do.,	2 of 20 2 of 39	24	110	606	75	60·6	32·5	9·0	23·4	2·6	128	1·16	·213
Do. do. Expansive Surface-Condensing,	4 of 20	12	50	310	60	32	22·5		12·5	...	67	1·34	·216
Single-screw Single-crank Compound Vertical Surface-Condensing,	27 and 60½	54	200	1020	80	132	58·5	17·8	39·4	3·3	251	1·25	·239
Do. do. do.,	26 and 58	45	160	850	80	105	47·4	12·8	33·6	3·2	202	1·26	·238
Do. do. do.,	24½ and 53	36	120	634	80	68·1	28·6	11·0	23·4	3·9	135	1·12	·214

WEIGHT OF MACHINERY—*Continued.*

d. *As fitted on board certain Ships.*

(TWIN SCREWS AND SINGLE SCREWS).

GENERAL DESCRIPTION OF ENGINES.	CYLINDERS.		INDICATED HORSE POWER.		Boiler Pressure.	WEIGHT OF						WEIGHT PER I.H.P.		Full Power Revolutions.
	Diameter.	Stroke.	Natural Draught.	Forced Draught.		Engines.	Boilers.	Funnel and Mountings.	Water.	Spare Gear.	Total.	Natural Draught.	Forced Draught.	
	inches.	ft. ins.			lbs.	tons.	tons.	tons.	tons.	tons.	tons.	tons.	tons.	
Vertical Naval Twin Screw, . . .	40, 59, 88	4 3	10,000	12,000	150	466½	314¾	135¼	172¾	16¼	1105½	·1105	·092125	100
Do. do., .	33½, 49, 74	3 3	7,000	9,000	150	253¾	195½	98¾	122	12	682	·098	·0759	140
Do. do., .	30½, 45, 68	2 9	4,500	7,500	150	211¾	131	80	87¾	9½	520	·115	·0695	160
Do. do., .	26½, 39, 57	2 3	...	6,000	150	100½	88	34¾	38¼	5¾	267¼	...	·0445	220
Do. do., .	21, 31, 45	2 0	1,900	3,000	150	90¾	59½	41½	41¼	3¾	236¾	·124	·0789	200
Do. do., .	22, 33, 49	1 9	...	4,500	150	52½	57½	23¾	27¼	4	165	...	·0366	310
Horizontal Naval Twin Screw, . . .	36, 51, 78	3 6	5,500	8,500	130	321½	199¼	93	141¾	16	771½	·140	·090	115
Do. do., .	25½, 39, 60	3 3	3,000	4,000	150	176¾	130¼	51	91¾	8	457¾	·152	·114	110
Do. do., .	18½, 29, 43	2 0	1,400	2,000	140	73½	51	29½	35	3	192	·137	·096	180
Horizontal Naval Single Screw, . . .	20, 30, 45	2 0	720	1,200	150	39¾	27½	17	21	3	108¼	·151	·09	190

WEIGHT OF MACHINERY—*Continued.*

e. *As fitted on board certain Modern Mercantile Steamers.*

GENERAL DESCRIPTION OF ENGINES.	CYLINDERS.		HORSE POWER.		Boiler Pressure.	WEIGHT OF						WEIGHT PER	
	Diameter.	Stroke.	Nominal.	Indicated.		Engines.	Boilers.	Funnel, Mountings, &c.	Water.	Spare Gear.	Total.	N.H.P.	I.H.P.
	inches.	ins.			lbs.	tons.	tons.	tons.	tons.	tons.	tons.	tons.	tons.
Vertical, Direct Acting, Three-Crank (Single Screw), .	19, 30, 50	33	150	860	160	68·0	35·8	8·5	20·7	...	133·0	·887	·154
Do. do., .	20½, 31, 54	33	150	1,007	160	78·0	46·6	10·2	28·0	...	162·8	1·08	·161
Do. do., .	22, 35, 57	42	165	1,383	150	105·0	62·5	17·6	35·0	2·0	222·1	1·37	·16
Do. do., .	22, 35, 57	42	165	1,584	170	108·0	86·2	18·7	53·0	14·9	280·8	1·7	·177
Do. do., .	23½, 35, 57	33	170	1,538	150	75·0	62·8	15·8	35·0	3·0	191·6	1·127	·124
Do. do., .	24, 39, 64	33	210	1,786	160	93·0	80·0	12·4	52·0	...	237·4	1·13	·133
Do. do., .	24, 38, 62	42	200	1,585	160	125·0	64·0	20·9	46·0	8·0	363·9	1·319	·166
Do. do., .	25, 40, 66	48	300	1,502	160	148·0	79·4	22·1	48·6	12·1	310·2	1·034	·206
Do. do., .	30, 46, 75	45	400	2,601	160	157·0	116·5	31·4	80·0	0·85	385·75	·964	·148
Do. do., .	31, 50, 82	57	450	2,842	160	251·0	146·0	42·5	82·5	3·5	525·5	1·168	·184
Do. do., .	32, 48, 80	48	500	3,115	160	234·0	114·2	30·0	76·0	16·8	471·0	·942	·151
Do. (Twin Screws), .	12½, 19, 32	24	125	1,039	175	46·0	45·6	11·2	26·5	1·2	130·5	1·044	·125
Do. do., .	26, 39½, 61	36	650	5,780	160	217·0	189·5	69·4	109·5	5·3	590·7	·908	·102

TABLE XXVIII.—Results of Trials of Marine Engines.

General Description of Engines.	Cylinders.		N.H.P.	Boiler Pressure.	Vacuum.	Revolutions.	Rate of Total Expansion.	Cylinder Mean Pressure.		I.H.P.		
	Diameter.	Stroke.						H.P.	L.P.	H.P.	L.P.	Total.
	inches.	ins.		lbs.	inches.			lbs.	lbs.			
Screw Vertical Compound, .	1 of 62 2 of 90	66	1000	86	27	55	...	44	16·5 16·7	2433	1945 1928	6306
Do. do. do., .	43 and 86	60	420	80	27	57·4	7·0	47·4	11·2	1198	1131	2329
Do. do. do., .	46 and 87	57	400	76	28	57	5·84	41·2	12·7	1124	1238	2362
Do. do. do., .	42 and 84	60	400	88	26¾	57	7·2	51·0	11·7	1220	1127	2347
Do. do. do., .	52 and 96	48	400	63	26½	60	...	35·7	10·3	1103	1085	2188
Do. do. do., .	34 and 68	63	275	78	25½	57	6·8	45·8	9·75	754	642	1396
Do. do. do., .	38 and 76	48	270	79	26½	62	6·62	46·4	11·2	790	763	1553
Do. do. do., .	40 and 74	48	250	80	27	63	5·67	41·1	12·26	789	805	1594
Do. do. do., .	32 and 64	63	250	80	25	53	6·9	49·7	11·67	674	633	1307
Do. do. do., .	36 and 72	48	230	72	27¼	60	6·0	45·2	10·3	669	610	1279
Do. do. do., .	35 and 69	39	180	82	26¾	70	6·6	46·4	11·5	614	593	1207
Do. do. do., .	33¾ and 64½	42	180	70	28	58	5·55	40·3	11·3	442	454	896
Do. do. do., .	32 and 62	36	150	66	25	69	6·43	45·4	10·37	458	392	851
Do. do. do., .	20½, 33, 58	36	140	147	25½	62	14·4	61·6 24·6	7·1	229 232	197	664
Do. do. do., .	25 and 50	45	130	80	27	71	7·5	46·2	12·5	366	397	763
Do. do. do., .	30 and 55	36	125	84	24½	74·5	6·96	45·1	11·9	430	383	813
Do. do. do., .	27 and 53	33	110	80	24	84	7·49	46·1	11·75	369	361	731
Do. do. do., .	27 and 50	30	100	73	23½	68	5·42	43·6	13·36	260	270	530
Do. do. do., .	24 and 45	33	90	84	26	82	6·43	45·1	13·0	278	282	560
Do. do. do., .	21 and 40	27	60	77	25½	98	6·15	45·1	11·37	209	191	400
Do. do. do., .	17 and 32	18	35	72	25	120	6·4	40·7	9·8	100	86	186
Screw Horizontal Compound, .	60 and 99	39	400	59½	26	85	...	28·5	9·15	1347	1179	2526
Do. do. do., .	57 and 90	33	350	60	25½	95·8	...	25·7	10·65	1051	1088	2139
Do. do. do., .	31 and 48	18	60	60	26	137	...	...	...	240	279	519

RESULTS OF TRIALS OF MARINE ENGINES—*Continued.*

General Description of Engines.	Cylinders.				Boiler Pressure.	Vacuum.	Revolutions.	Rate of Total Expansion.	Cylinder Mean Pressure.			I.H.P.			
	H.P.	M.P.	L.P.	Stroke.					H.P.	M.P.	L.P.	H.P.	M.P.	L.P.	Total.
	ins.	ins.	ins.	ins.	lbs.	ins.									
Vertical, Direct Acting, Three Crank.	40	64	92	60	140	23	77	7·2	55·1	21·4	11·45	1615	1606	1775	4996
	40	58	88	54	130	27	80	6·3	40·4	27·9	13·98	1108	1610	1856	4574
	31	50	82	57	160	27	66	11·6	60·8	23·1	11·06	871	861	1109	2841
	31	50	82	57	142	24	59	11·6	56·2	21·1	10·0	720	704	896	2320
	28	43	70	39	154	28	88	10·3	57·6	31·2	10·7	616	785	710	2111
	26	40	68	39	150	28	82	11·3	58·5	30·9	10·85	504	627	636	1767
	23	35	60	57	148	26	70	12·0	48·4	31·2	9·07	405	604	516	1525
	21½	34	52	36	149	26	88	9·6	57·4	33·4	13·0	333	485	442	1260
	20½	33	58	36	147	25½	62	14·5	61·6	24·7	7·1	229	238	197	664
	19½	30	52	33	144	26½	73	12·9	54·2	34·2	10·05	197	294	260	751
	18	27	48	27	150	26½	90	13·2	60 3	29·3	8·57	188	205	190	583
	15½	24	40	24	143	27	100	12·2	44·7	29·6	11·5	102	162	175	439
	11½	17	30	21	148	28	132	11·3	59·1	34·4	10·9	85	109	108	302
	11½	17	30	18	137	29	127	11·4	67·6	29·4	9·45	81	77	77	235

Results of Trials of Marine Engines—*Continued.*

General Description of Engines.	Cylinders.					Boiler Pressure.	Vacuum.	Revolutions.	Rate of Total Expansion.	Cylinder Mean Pressure.				I.H.P.				
	H.P.	1st M.P.	2nd M.P.	L.P.	Stroke.					H.P.	1st M.P.	2nd M.P.	L.P.	H P.	1st M.P.	2nd M.P.	L.P.	Total.
	ins.	ins.	ins.	ins.	ins.	lbs.	ins.											
Horizontal Triple Compound (Twin Screw), .	36	51	...	78	42	120·5	22·5	118·6	5·8	36·25	34·35	...	16·35	928·6	1764·7	...	1965·2	4658·59 (one set)
Do. do., .	25·5	39	...	60	39	150	26	107	...	43·6	34·4	...	16·2	464	859	...	956	2279 (one set)
Do. (Single Screw),	20	30	...	45	24	138	27	189·5	6·75	53·1	25·5	...	15·3	382·4	414·4	...	562·2	1359·0
Vertical Triple Compound (Twin Screw), .	43	62	...	96	51	132·8	26·2	96·08	...	48·69	29·057	...	17·98	1750	2171	...	2129	6050 (one set)
Do. do., .	21	31	...	45	24	147	25·5	196·7	5·75	52·5	27·6	...	14·8	453	501	...	547	1501 (one set)
Do. (Single Screw),	40	63	...	96	54	145	28¾	72	8·73	65	22·4	...	12·15	1604·2	1371·1	...	1726·8	4702·18
Do. do., .	32	48	...	80	48	158	27¾	72	9·61	59·8	36·0	...	13·35	828	1137	...	1150	3115
Do. do., .	24	38	...	62	42	158	27	83	10·93	56·5	29·9	...	10·12	450	597	...	538	1585
Do. do., .	12¾	20	...	32	22	152·5	26	145	10·09	66·4	28·8	...	10·7	135·7	145·3	...	138·2	419·2
Vertical Quadruple Compound (Single Screw), .	12¾	18½	27	39	24	200	25	98	15·1	75	34·3	15·3	11·8	113	110	104	168	495
Do. do., .	14	21	29	44	27	170	24·5	92	15·93	74·1	26·9	16·3	7·5	143	117	135	143	538

Results of Recent Trials of Marine Engines—*Continued.*

General Description of Engines.	Cylinders.				Boiler Pressure.	Vacuum.	Revolutions.	Rate of Total Expansion.	Cylinder Mean Pressure.			I.H.P.			
	H.P.	M.P.	L.P.	Stroke.					H.P.	M.P.	L.P.	H.P.	M.P.	L.P.	Total.
	ins.	ins.	ins.	ins.	lbs.	ins.	No.		lbs.	lbs.	lbs.				
Vertical, Direct Acting, Three Crank (Single Screw), . .	19	30	50	33	160	27	94	11·55	64·0	28·6	8·5	284	316	260	860
Do. do., . .	20½	31	54	33	160	27·5	92	11·5	54·0	37·6	8·6	278	428	301	1007
Do. do., . .	22	35	57	42	150	27	83·5	10·8	68·5	25·8	10·6	462	440	481	1383
Do. do., . .	22	35	57	42	170	26	91·5	9·0	78·6	27·4	9·9	580	512	492	1584
Do. do., . .	23½	35	57	33	150	26·7	104	7·94	54·5	28·8	14·1	421	486	631	1538
Do. do., . .	24	39	64	33	160	28	100	9·48	66·0	26·1	14·7	492	514	780	1786
Do. do., . .	25	40	66	48	160	26	73	12·6	50·9	23·25	9·07	438	515	549	1502
Do. do., . .	30	46	75	45	160	28·5	79	9·76	57·4	33·4	11·05	728	997	876	2601
Do. do., . .	31	50	82	57	160	27·5	66	10·93	60·8	23·1	11·05	871	862	1109	2842
Do. (Twin Screws),	12½	19	32	24	175	26	147	9·5	70·0	39·0	12·0	305	388	346	1039
Do. do., .	26	39½	61	36	160	26·25	134·7	7·85	61·2	33·1	15·4	1590	1986	2204	5780

APPENDIX A.

Bremme's Valve-Gear.

I am indebted to Mr. Gustav A. C. Bremme, of Liverpool, who claims priority for his patent over that which is described and illustrated on pages 291 and 292, under the heading of "Marshall's Valve-Gear," for the following investigations; and as this invention is now coming into favour with marine engineers, further particulars are given, with an exact method of calculating the valve oscillations.

The accompanying diagrams (figs. 141 and 142) represent the Gear as applied to Inverted Marine engines. It is here assumed that the engines are worked from the starboard side, so that fig. 141 shows the ahead position, and fig. 142 the astern position of the Gear.

If the engines are worked from the port side, fig. 142 shows the ahead, and fig. 141 the astern position of the Gear, as is easily understood.

The eccentric coincides with the crank, and its radius $= r$.

$K H = l$ is the stiff eccentric-rod, jointed at H to the radius-rod, $H G = \rho$, which swings on G, the gudgeon or joint attached to $F G = \rho$, the radius-arm, which is movable on the fixed centre, F.

$H E = m$ is a prolongation of the eccentric-rod (K H), with which it may, if desirable, form a slight angle, and which is termed the "Lead-arm," as the amount of lead is proportionate to its length.

The valve-rod is jointed at E, and the distances, $E N = \sigma$, practically represent the oscillations of the valve.

The angle, δ, at which the radius-arm deviates on either side from the vertical, through the fixed centre (F), and which is termed the "deviation angle," should never exceed 25°.

The crank-shaft moves in the same direction in which the radius-arm, F G, deviates from the vertical through F.

The distance, $C F = a$, between centre of crank-shaft and fixed centre, F, is $= (l^2 - r^2)^{\frac{1}{2}}$, so that, when the crank-shaft is at either dead-point, the centre, H, covers the fixed centre, F. Hence the lead $= \frac{m}{l} . r$, remains constant for all grades of cut-off.

As the centre, H, travels through an arc described by the radius-rod, H G, the oscillations, σ, are greater above than those below the centre line, $\chi\chi$. This difference between the upper and lower oscillations, which is affected by the length of radius-rod and arm, has the advantage that the valve-openings are less, and the cut-offs and cushionings earlier, for the down-stroke than for the up-stroke, so that the momentum of the moving weights is always suitably balanced.

To determine the best proportions of gear, it is necessary to

Fig. 141.

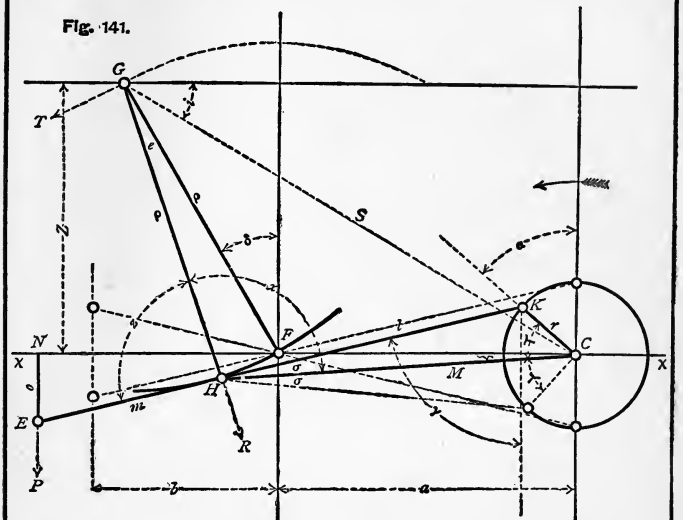

Fig. 142.

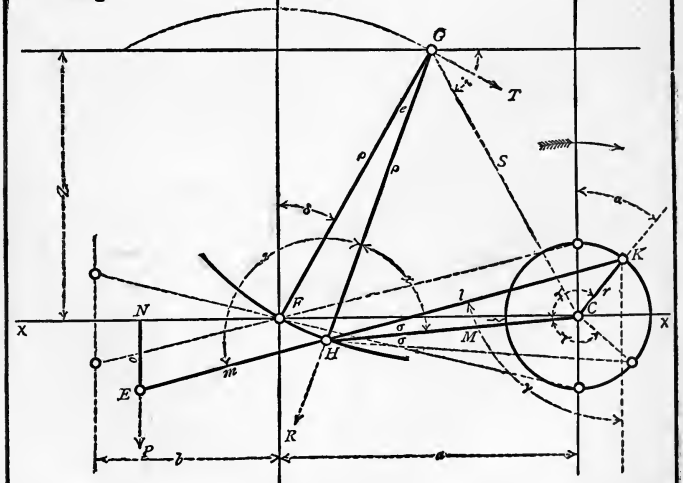

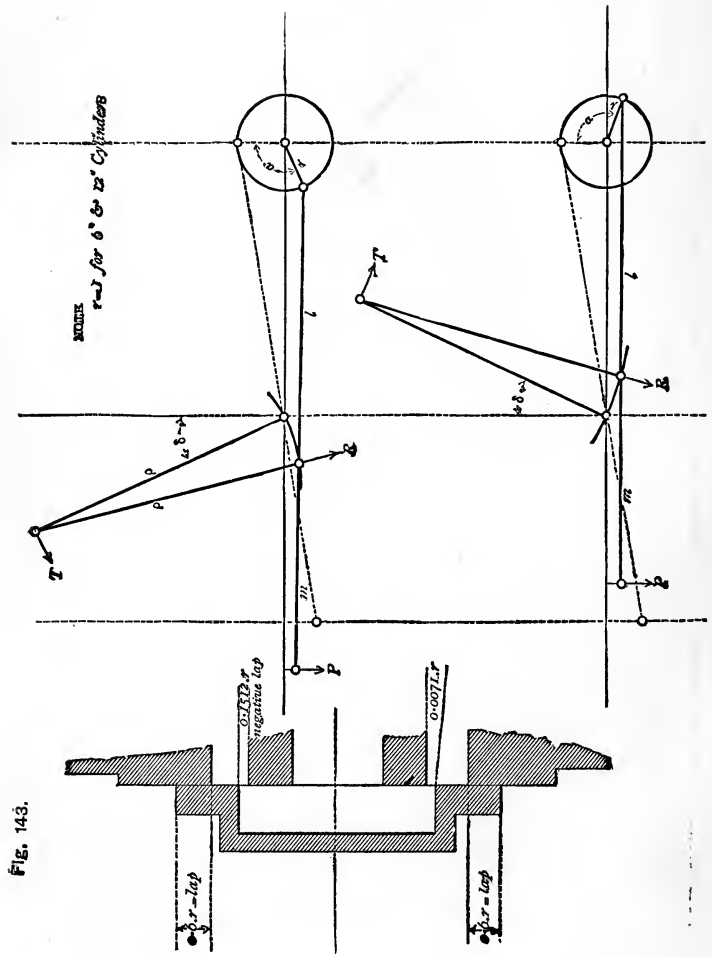
NOTE
r=1 for 6" & 12" Cylinders
0·1512 r
negative lap
0·007 L.r
δ.r = lap
δ.r = lap

Fig. 143.

NOTE.—The crank-angles, α, are counted here from both respective dead-points.

NOTE.—The Piston Rod = 4½ Cranks. (See Fig. 141.)	$\delta = 25°$.				$\delta = 22\frac{1}{2}°$.				$\delta = 20°$.			
	DOWN.		UP.		DOWN.		UP.		DOWN.		UP.	
	$\Delta\ \alpha$	Pist. pos.	$\Delta\ \alpha$	P	$\Delta\ \alpha$		$\Delta\ \alpha$		$\Delta\ \alpha$		$\Delta\ \alpha$	
Lead Opening, . . .	0° 0′	0·15 r	0° 0′	0·15 r	0° 0′	0·15 r	0° 0′	0·15 r	0° 0′	0·15 r	0° 0′	0·15 r
Maximum Opening, .	35° 58′	0·4166 r	56° 29′	0·6412 r	35° 44′	0·3722 r	45·57	0·5507	35·29	0·3251 r	46·25	0·4726 r
Cut-off, ...	95·2	0·6 *St.*	110° 40′	0·626 *St.*	88·31	0·546 *St.*	105·18	0·589 *St.*	81·31	0·448 *St.*	100·52	0·548 *St.*
Cushioning, ...	134·9	0·88 *St.*	145° 27′	0·895 *St.*	132·57	0·87 *St.*	142·54	0·875 *St.*	125·17	0·825 *St.*	139° 16′	0·851 *St.*
Release, ...	126·22	0·83 *St.*	138·4	0·85 *St.*	120·26	0·8 *St.*	134·6	0·82 *St.*	115·27	0·764 *St.*	131° 0′	0·8 *St.*

NOTE.—The Piston Rod = 4½ Cranks. (See Fig. 142.)	$\delta = 25°$.				$\delta = 22\frac{1}{2}°$.				$\delta = 20°$.			
	DOWN.		UP.		DOWN.		UP.		DOWN.		UP.	
	$\Delta\ \alpha$	Pist. pos.	$\Delta\ \alpha$		$\Delta\ \alpha$		$\Delta\ \alpha$		$\Delta\ \alpha$		$\Delta\ \alpha$	
Lead Opening, . . .	0° 0′	0·15 r	0° 0′	0·15 r	0° 0′	0·15 r	0° 0′	0·15 r	0° 0′	0·15 r	0° 0′	0·15 r
Maximum Opening, .	30·28	0·4184 r	59° 55′	0·6438 r	30° 45′	0·3699 r	59·30	0·5638 r	31·1	0·3242 r	59·0	0·4823 r
Cut-off, ...	90·1	0·56 *St.*	120·14	0·71 *St.*	84·0	0·51 *St.*	114·43	0·656 *St.*	77·15	0·432 *St.*	109·21	0·61 *St.*
Cushioning, ...	129° 48′	0·85 *St.*	150·49	0·925 *St.*	125·58	0·83 *St.*	148·35	0·908 *St.*	121·58	0·802 *St.*	145·47	0·895 *St.*
Release, ...	120·54	0·81 *St.*	144·10	0·885 *St.*	115·32	0·764 *St.*	141·45	0·87 *St.*	110·56	0·73 *St.*	138·26	0·85 *St.*

Maximum Strains (at $\alpha = 56° 29'$ in the Up-Stroke, Fig. 141, and $\delta = 25°$); R=2,16 P; T=0,3377 P.

construct Tables, giving the values of N E = o, for a sufficient number of crank-angles, by the following method:—

General formula for oscillation, $o = (l + m)$ cos. $\gamma - r$ cos. α.

Count all the crank-angles (α) from 0° to 360°, from the upper dead-point, and reckon the values of σ positive (+) below the centre line, $\chi\chi$, and negative (−) above.

For the given values of a, ρ and angle, δ, find the values of z, s, and angle, i—

$$s^2 = a^2 + \rho^2 \pm 2\,a\,\rho \text{ sin. } \delta\,;\ z = \rho \text{ cos. } \delta\,;\ \text{sin. } i = \frac{z}{s}.$$

The values of C H = M range from a to $(l + r)$ and from a to $(l - r)$.

Find angles, τ and σ, for the given values of M, l, and r,

$$\text{cos. } \tau = \frac{M^2 + r^2 - l^2}{2\,M\,r}\,;\ \text{sin. } \sigma = \frac{r}{l} \text{ sin. } \tau.$$

Each value of M corresponds to two crank-angles.

Find angle, F C H = ξ, for the given values of M, S, and ρ—

$$\text{cos. } (i \pm \xi) = \frac{M^2 + S^2 - \rho^2}{2\,M\,S}.$$

Then the values of the angles, α and γ, for the four quadrants of the circle are as follows:—

For the ahead position, Fig. 141—

$$\alpha = 90 + \xi - \tau\,;\ 90 + \xi + \tau\,;\ 90 - \xi + \tau\,;\ 450 - \xi - \tau.$$
$$\gamma = 90 - \sigma - \xi\,;\ 90 + \sigma - \xi\,;\ 90 + \sigma + \xi\,;\ 90 - \sigma + \xi.$$

For the astern position, Fig. 142—

$$\alpha = \tau - 90 - \xi\,;\ 270 - \xi - \tau\,;\ 270 + \xi - \tau\,;\ 270 + \xi + \tau.$$
$$\gamma = 90 - \sigma - \xi\,;\ 90 + \sigma - \xi\,;\ 90 + \sigma + \xi\,;\ 90 - \sigma + \xi.$$

The tables on page 497 give the results for the following proportions of the gear and valve:—

Radius-rod and radius-arm,	$\rho = 6\ r$.
Eccentric-rod, K H,	$l = 6\ r$.
Lead-arm, H E,	$m = 4{,}5\ r$.
Lap on steam-edges (both ends equal) as shown by Fig. 143.	$= 0{,}6\ r$,

NOTE.—As a general rule, the lap on the steam-edges may be $0{,}75\,\frac{m}{l}\,r$.

The chief feature of Morton's Reversing "Valve-Gear" is the method employed for correcting the irregular angularity of the connecting-rod, and the maintenance of the correction whether the engines are set to work in full forward or backward gear, or any intermediate position. Equal port-openings for both ends of the cylinder are thus given, if necessary: the lead is constant for all grades of expansion, and the motion of the slide valve is such that "wire-drawing" and "cushioning" are reduced to a minimum, the motion of the valve being in unison with the stroke of the main piston, instead of being in unison with the revolution of the crank, as is the case with other valve-gears of this class.

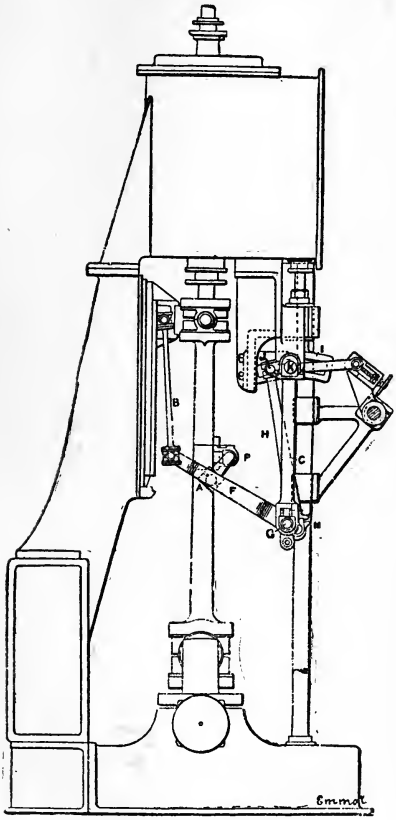

Fig. 144.—Morton's Valve-Gear.

The movable point, A, receives its motion from the crosshead, as shown by the diagram (fig. 144), and radiates with the short lever or crank, P, centered in a projection, P, on the connecting-rod, receiving its motion from a point in the valve lever, F. The proportions are such that the versed sine of the crank, P, will be equal to the versed sine of the lever, F, as is customary with this system, when used as a parallel motion. The driving end of the lever, F, is connected with the crosshead by means of the link, B, and its fulcrum end, G, is suspended by links, C, vibrating from fixed centres, K, at their upper ends. These links are always parallel with the connecting-rod, when the engine is "on the centre." The radiating movable point, A, corrects the angularity, both of the connecting-rod and of the valve lever, F, by one motion. The movement of the links, C, in vibrating from right to left, or left to right, from the centre line, in whatever direction the crank may revolve, is equal, for

equal increments of the travel of the piston. These conditions are maintained whether the engines are in forward or in backward gear, or linked up to any intermediate position. The reversing portion of the gear consists of a quadrant, I, properly secured, so as to form part of the slide valve rod, and to move with it. The bracket, forming the guide for the valve, spindle, and quadrant, has arms cast on, which carry the fixed centres, K, of the vibrating links, C.

The arc of the quadrant, I, being the radius of the adjustable link, H, from the centre, N, is fitted with a die block, J, capable of being moved to the right or left from the centre of the quadrant, for forward or backward motion of the engines, consequently, when the engine is "on the centre," the upper end of the adjustable link, H, and its block, J, may be moved through the whole range of the quadrant, I, from right to left, or *vice versâ*, without moving the slide valve.

This arrangement reduces to a minimum the wear of the die block in the quadrant, for when it is once set in position for working, there is little or no motion.

The Morton valve-gear has been introduced, for the Proprietors of Morton's Valve-Gear Patents, by Mr. Robert Bruce, M.I.Mech.E., and successfully applied to a number of ocean going steamers of large power. In wear and tear, and first cost, it compares favourably with the best forms of link-motion, while, in common with other forms of valve-gear of this class, considerable reduction in space and weight is often effected in the engines to which it is fitted, the reduction of weight, power for power, is in some instances as much as 10 per cent.

APPENDIX B.

Original Board of Trade Rules for Shafts (not now used).

Size of Shafting.—Main, and tunnel, and propeller shafts must not be passed if found to be less in diameter than that given by the following rules, without previously submitting the whole case to the Board of Trade for their consideration. It will be found that first-class makers generally put in larger shafts than those given by the following formulæ.

For compound engine, with two cylinders:

$$\text{Diameter of shaft in inches} = \sqrt[3]{\frac{(d^2 \times P) + (D^2 \times 15)}{f}}\, C,$$

where d = diameter of high-pressure cylinder in inches.
D = diameter of low-pressure cylinder in inches.
P = boiler pressure.
C = length of crank in inches.
f = constant from following table.

For ordinary condensing engines, with two cylinders, when the pressure is not low:

$$\text{Diameter of shaft in inches} = \sqrt[3]{\frac{D^2 \times P \times 2}{f}}\, C,$$

where D = diameter of cylinder.
P = boiler pressure.
C = length of crank in inches.
f = constant from following table.

Constant.	Angle between Cranks.	For Crank and Propeller Shafts.	For Tunnel Shaft.
f	90°	2468	2880
,,	100°	2279	2659
,,	110°	2131	2487
,,	120°	2016	2352
,,	130°	1926	2248
,,	140°	1858	2168
,,	150°	1806	2108
,,	160°	1772	2068
,,	170°	1752	2045
,,	180°	1746	2037

Declarations for twelve months having in some cases been granted for vessels the crank shafts of which have contained slight flaws, the Surveyors are informed that a declaration for twelve months should not be granted whenever the Surveyor has any doubt whatever as to the efficiency of any portion of the vessel, or her machinery, for such period.

APPENDIX C.

Board of Trade Rules for Spare Gear.

Spare Gear and Stores to be carried.—Foreign-going steamers coming in for survey must be provided with spare gear. In the case of steamers coming in for survey under the Passengers Acts, and other steamers performing ocean voyages, no question as to gear need be raised if the following spare gear and stores are supplied. The heavier portions of this gear must have been fitted and tried in its place, and must be kept on board where access can at all times be had to it:—

1 pair of connecting-rod brasses.
1 air-pump, bucket, and rod, with guide.
1 circulating pump, bucket, and rod.
1 air-pump head valve, seat, and guard.
1 set of India-rubber valves for air-pumps.
1 circulating pump head valve, seat, and guard.
1 set of India-rubber valves for circulating pumps.
2 main bearing bolts and nuts.
2 connecting-rod bolts and nuts.
2 piston-rod bolts and nuts.
8 screw shaft coupling bolts and nuts.
1 set of piston springs.
3 sets, if of India-rubber, or 1 set, if of metal, of feed-pump valves and seats.
3 sets, if of India-rubber, or 1 set, if of metal, of bilge-pump valves and seats.
1 hydrometer.
Boiler tubes, 3 for each boiler.
100 iron assorted bolts, nuts, and washers, screwed, but need not be turned.
12 brass bolts and nuts, assorted, turned, and fitted.
50 iron „ „ „ „
50 condenser tubes.
100 sets of packing for condenser tube ends, or an equivalent.
At least one spare spring of each size for escape valves.
1 set of water-gauge glasses.

$\frac{1}{10}$ the total number of fire-bars necessary.
3 plates of iron, assorted.
6 bars of iron, assorted.
1 complete set of stocks, dies, and taps, suitable for the engines.
1 smith's anvil.
1 fitter's vice.
Ratchet-braces, and suitable drills.
1 copper or metal hammer.
Suitable blocks and tackling for lifting weights.
1 dozen files, assorted, and handles for the same.
1 set of drifts or expanders for boiler tubes.
1 set of safety-valve springs (if so fitted) for every four valves; if there are not four valves, then at least one set of springs must be carried.
1 screw jack.
And a set of engineer's tools suitable for the service, including hammers and chisels for vice and forge; solder and soldering-iron; sheets of tin and copper; spelter; muriatic acid, or other equivalent, &c., &c.

APPENDIX D.

Lloyd's Rules for Machinery and Boilers.

Special Survey of New Engines or Boilers.—The Surveyors are to examine the materials and workmanship from the commencement of the work until the final test of the machinery under steam; any defects, &c., in material or workmanship to be pointed out as early as possible.

The Surveyors may also, if desired, compare the work as it progresses with the requirements of the specification agreed upon by the parties concerned, and certify to the conditions thereof, so far as can be seen, being complied with.

In cases of machinery or boilers built under these special surveys, the distinguishing mark, ✠ in red, will be noted in the Register Book—thus ✠ Lloyd's MC., ✠ NE&B., or ✠ NB.

Ordinary Survey of New Engines or Boilers will be as follows:—

1. On the different parts of the engine during erection.
2. On the sea connections while being fitted to the vessel.
3. On the boiler plates when they are bent, flanged, and holed, ready for riveting, and on stays, &c., while being fitted.
4. Testing the boilers by hydraulic pressure.
5. When engines and boilers are being fixed on board the vessel.
6. At the setting and testing of safety valves and trying the machinery under steam.

Periodical Surveys of Engines and Boilers.—The machinery and boilers of all steam ships are to be surveyed annually if practicable, and in addition to be submitted to a Special Survey every four years upon the occasion of the vessel's undergoing the Special periodical Surveys Nos. 1, 2, and 3 prescribed in the Rules.

At these Surveys the propeller, stern-bush, and fastenings of the sea connections are to be examined while the vessel is in dry dock, and if deemed necessary by the Surveyor the stern shaft is to be drawn and examined.

The cylinders, pistons, slide valves, crank-shaft, and pumps are to be examined, and if necessary the condenser is to be examined and tested.

The boilers and superheaters are to be examined, and if deemed necessary by the Surveyors are to be drilled or tested by hydraulic pressure; the safe working pressure is to be determined by their actual condition.

The safety valves are to be examined and set to the safe working pressure.

The sea connection and arrangements of cocks, pipes, bilge suctions, roses, &c., are to be examined.

If satisfactory, these surveys will be recorded in the Register Book thus:—"LLOYD'S M.C. 5,93" in red; "B.&M.S. 5,93" in red.

"LLOYD'S M.C.," with a date, denotes that the machinery and boilers are fitted in accordance with the Rules, and were found upon examination at that time to be in good condition.

"B.&M.S.," with a date, denotes that the boilers and machinery, though not fitted strictly in accordance with the Rules, were found upon inspection at that time to be in good condition.

In the event of either the machinery or boilers appearing to be impaired to such an extent as renders it desirable that either or both be specially surveyed within the periods prescribed above, a Certificate for either machinery or boilers for a limited period will be granted according to the nature of the case.

Machinery.—

An approved safety valve is to be fitted to the superheater.

The machinery and boilers are to be securely fixed to the vessel to the satisfaction of the Surveyor.

The engines are to be fitted with two feed-pumps, each capable of supplying the boilers; the pumps, &c., to be so arranged that either can be overhauled whilst the other is at work.

The engines are to be fitted with two bilge-pumps, which are to be so arranged that either can be overhauled whilst the other is at work.

In small engines (say 70 H.P. and under), one feed-pump and one bilge-pump will be deemed sufficient provided they are of adequate capacity.

The main feed-pumps may be worked by independent engines provided they are fitted with automatic regulators for controlling their speed. If only one such pump is fitted for the main feed, the

auxiliary feed-pump should also be fitted with an automatic speed regulator.

A bilge injection, or a bilge suction to the circulating pump, is to be fitted.

The engine bilge-pumps are to be fitted capable of pumping from each compartment of the vessel. The mud boxes and roses in engine-room are to be placed where they are easily accessible, and to the satisfaction of the Surveyor.

A steam pump is to be provided capable of supplying the boilers with water, this pump to be provided with suctions to the hotwell and also to the sea. A steam pump is to be so fitted as to pump from each compartment, to deliver water on deck, and if no hand pump is fitted in engine-room, it must be fitted to be worked by hand. In small vessels, in which only one steam pump is fitted, it must comply with all these requirements.

In all steam pipes provision is to be made for expansion and contraction to take place without unduly straining the pipes, and all main steam pipes are to be tested by hydraulic pressure to twice the working pressure, in the presence of the Engineer-Surveyor.

Rules for Determining the Working Pressure to be Allowed in New Boilers.

Cylindrical Shells.—The strength of circular shells to be calculated from the strength of the longitudinal joints by the following formula:—

$$\frac{\mathbf{C} \times \mathbf{T} \times \mathbf{B}}{\mathbf{D}} = \text{working pressure,}$$

where $\mathbf{C}$ = constant as per following table.
$\mathbf{T}$ = thickness of plate in inches.
$\mathbf{D}$ = mean diameter of shell in inches.
$\mathbf{B}$ = percentage of strength of joint found as follows —the least percentage to be taken.

$$\text{For plate at joint } \mathbf{B} = \frac{p - d}{p} \times 100.$$

$$\text{For rivets at joint } \mathbf{B} = \frac{n \times a}{p \times \mathbf{T}} \times \mathbf{F}.$$

$\mathbf{F} = 100$ when the rivets are iron and the plates iron with punched holes
$\mathbf{F} = 90$ " " " " " drilled "
$\mathbf{F} = 85$ " " steel " steel " "
$\mathbf{F} = 70$ " " iron " " " "

(In case of rivets being in double shear, $1{\cdot}75a$ is to be used instead of a),

where p = pitch of rivets.
d = diameter of rivets.
a = sectional area of rivets.
n = number of rows of rivets.

Mem.—In any case where the strength of the longitudinal joint is satisfactorily shown by experiment to be greater than that given by this formula, the actual strength may be taken in the calculation.

TABLE OF CONSTANTS—IRON BOILERS.

Description of Longitudinal Joint.	For Plates ½-inch thick and under.	For Plates ⅝-thick and above ½-inch.	For Plates above ⅝-inch thick.
Lap Joint, Punched Holes, . . .	155	165	170
Lap Joint, Drilled Holes, . . .	170	180	190
Double Butt Strap Joint, Punched Holes,	170	180	190
Double Butt Strap Joint, Drilled Holes, .	180	190	200

Note.—The Inside Butt Strap to be at least $\frac{3}{4}$ the thickness of the plate.

CYLINDRICAL SHELLS OF STEEL BOILERS.

The strength of cylindrical shells of steel boilers is to be calculated from the following formula :—

$$\frac{C \times (T - 2) \times B}{D} = \text{working pressure in lbs. per square inch.}$$

Where **D** = mean diameter of shell in inches.

T = thickness of plate in sixteenths of an inch.

C = 20 when the longitudinal seams are fitted with double butt straps of equal width.

C = 19·25 when they are fitted with double butt straps of unequal width, only covering on one side the reduced section of plate at the outer lines of rivets.

C = 18·5 when the longitudinal seams are lap joints.

B = the least percentage of strength of longitudinal joint.

Note.—The inside butt strap to have, at least, $\frac{3}{4}$ of the strength of the longitudinal joint.

Note.—For the shell plates of superheaters or steam chests enclosed in the uptake or exposed to the direct action of the flame, the constants should be $\frac{2}{3}$ of those given in the above table.

Proper deductions are to be made for openings in shell.

All manholes in circular shells to be stiffened with compensating rings.

The shell plates under domes in boilers so fitted, to be stayed from the top of the dome or otherwise stiffened.

Stays.—The strength of stays supporting flat surfaces is to be calculated from the smallest part of the stay or fastening ; the strain upon them is not to exceed the following limits, viz. :—

Iron stays.—For stays not exceeding $1\frac{1}{2}$ inches effective diameter, and for all stays which are welded, 6,000 lbs. per square inch. For unwelded stays above $1\frac{1}{2}$ inches effective diameter, 7,500 lbs. per square inch.

Steel stays.—For stays not exceeding $1\frac{1}{2}$ inches effective diameter,

8,000 lbs. per square inch; for stays above $1\frac{1}{2}$ inches effective diameter, 9,000 lbs. per square inch. No steel stays are to be welded.

Stay tubes.—The stress is not to exceed 7,500 lbs. per square inch.

Flat Plates.—The strength of flat plates supported by stays to be taken from the following formula :—

$$\frac{C \times T^2}{P^2} = \text{working pressure in lbs. per square inch.}$$

Where **T** = thickness of plate in sixteenths of an inch.

P = greatest pitch in inches.

C = 90 for plates $\frac{7}{16}$ thick and below fitted with screw stays with riveted heads.

C = 100 for plates above $\frac{7}{16}$ fitted with screw stays with riveted heads.

C = 110 for plates $\frac{7}{16}$ thick and under fitted with screw stays and nuts.

C = 120 for iron plates above $\frac{7}{16}$ thick, and for steel plates above $\frac{7}{16}$ and under $\frac{9}{16}$ thick fitted with screw stays and nuts.

C = 135 for steel plates $\frac{9}{16}$ thick and above, fitted with screw stays and nuts.

C = 140 for iron plates fitted with stays with double nuts.

C = 150 for iron plates fitted with stays with double nuts and washers outside the plates, of at least $\frac{1}{3}$ of the pitch in diameter and $\frac{1}{2}$ the thickness of the plates.

C = 160 for iron plates fitted with stays with double nuts and washers riveted to the outside of the plates, of at least $\frac{2}{5}$ of the pitch in diameter and $\frac{1}{2}$ the thickness of the plates.

C = 175 for iron plates fitted with stays with double nuts and washers riveted to the outside of the plates, when the washers are at least $\frac{2}{3}$ of the pitch in diameter and of the same thickness as the plates.

For iron plates fitted with stays with double nuts and doubling strips riveted to the outside of the plates, of the same thickness as the plates, and of a width equal to $\frac{2}{3}$ the distance between the rows of stays, **C** may be taken as 175, if **P** is taken to be the distance between the rows, and 190 when **P** is taken to be the pitch between the stays in the rows.

For steel plates, other than those for combustion chambers, the values of **C** may be increased as follows :—

$$\mathbf{C} = \begin{cases} 140 \text{ increased to } 175 \\ 150 \quad \text{,,} \quad 185 \\ 160 \quad \text{,,} \quad 200 \\ 175 \quad \text{,,} \quad 220 \\ 190 \quad \text{,,} \quad 240 \end{cases}$$

If flat plates are strengthened with doubling plates securely riveted

to them, having a thickness of not less than $\frac{2}{3}$ of that of the plates, the strength to be taken from

$$\frac{\mathbf{C} \times \left(\mathbf{T} + \frac{t}{2}\right)^2}{\mathbf{P}^2} = \text{working pressure in lbs. per square inch.}$$

Where t = thickness of doubling plates in sixteenths, and **C**, **T**, and **P** are as above.

Note.—In the case of front plates of boilers in the steam space, these numbers should be reduced 20 per cent., unless the plates are guarded from the direct action of the heat.

For steel tube plates in the nest of tubes the strength to be taken from

$$\frac{140 \times \mathbf{T}^2}{\mathbf{P}^2} = \text{working pressure in lbs. per square inch.}$$

Where **T** = the thickness of the plates in sixteenths of an inch.
P = the mean pitch of stay tubes from centre to centre.

For the wide water spaces between the nests of tubes the strength to be taken from

$$\frac{\mathbf{C} \times \mathbf{T}^2}{\mathbf{P}^2} = \text{working pressure in lbs. per square inch.}$$

Where **P** = the horizontal distance from centre to centre of the bounding rows of tubes, and

C = 120 where the stay tubes are pitched with two plain tubes between them and are not fitted with nuts outside the plates.
C = 130 if they are fitted with nuts outside the plates.
C = 140 if each alternate tube is a stay tube not fitted with nuts.
C = 150 if they are fitted with nuts outside the plates.
C = 160 if every tube in these rows is a stay tube and not fitted with nuts.
C = 170 if every tube in these rows is a stay tube and each alternate stay tube is fitted with nuts outside the plates.

The thickness of tube plates of combustion chambers in cases where the pressure on the top of the chambers is borne by these plates is not to be less than that given by the following rule :—

$$\mathbf{T} = \frac{\mathbf{P} \times w \times \mathbf{D}}{1{,}600 \times (\mathbf{D} - d)}.$$

Where **P** = working pressure in lbs. per square inch.
w = width of combustion chamber over plates in inches.
D = horizontal pitch of tubes in inches.
d = inside diameter of plain tubes in inches.
T = thickness of tube plates in sixteenths of an inch.

Girders.

The strength of girders supporting the tops of combustion chambers and other flat surfaces to be taken from the following formula :—

$$\frac{C \times d^2 \times T}{(L - P) \times D \times L} = \text{working pressure in lbs. per square inch.}$$

Where L = width between tube plates, or tube plate and back plate of chamber.
P = pitch of stays in girders.
D = distance from centre to centre of girders.
d = depth of girder at centre.
T = thickness of girder at centre. All these dimensions to be taken in inches.

Wrought Iron.

$C =$
- 6,000 if there is one stay to each girder.
- 9,000 if there are two or three stays to each girder.
- 10,000 if there are four or five stays to each girder.
- 10,500 if there are six or seven stays to each girder.
- 10,800 if there are eight stays or above to each girder.

Wrought Steel.

$C =$
- 6,600 if there is one stay to each girder.
- 9,900 if there are two or three stays to each girder.
- 11,000 if there are four or five stays to each girder.
- 11,550 if there are six or seven stays to each girder.
- 11,880 if there are eight stays or above to each girder.

Collapsing of Circular Furnaces.—The strength of furnaces to resist collapsing to be calculated from the following formula :—

$$\frac{89{,}600 \times T^2}{L \times D} = \text{working pressure in lbs. per square inch.}$$

Where 89,600 = constant.
T = thickness of plates in inches.
D = outside diameter of furnace in inches.
L = length of furnace in feet. If rings are fitted, the length between rings to be taken.

If the plates do not exceed $\frac{9}{16}$ inch in thickness, the pressure, however, is not to exceed

$$\frac{8{,}000 \times T}{D} = \text{lbs. per square inch.}$$

If the plates are of steel and exceed $\frac{9}{16}$ inch in thickness, the pressure is not to exceed

$$\frac{8{,}800 \times T}{D} = \text{lbs. per square inch.}$$

"In the furnaces referred to below the formulæ given are applicable

if the steel used has a tensile strength of not less than 26 nor more than 30 tons per square inch.

"If a less tensile strength than 26 tons, then for each ton per square inch which the minimum tensile strength falls below 26, the coefficient is to be correspondingly decreased by $\frac{1}{26}$ part."

If the furnaces are fitted with a single Adamson ring, at about the middle of their length, the pressure may be calculated from

$$\frac{10{,}400 \times T}{D} = \text{working pressure in lbs. per square inch.}$$

If the furnaces are fitted with two Adamson rings, then the pressure may be calculated from

$$\frac{11{,}400 \times T}{D} = \text{working pressure in lbs. per square inch.}$$

If the furnaces are fitted with a series of Adamson rings, at intervals not exceeding 23 inches, the pressure may be calculated from

$$\frac{1{,}000 \times (T - 2)}{D} = \text{working pressure in lbs. per square inch.}$$

Where T = thickness in sixteenths of an inch.
D = outside diameter of furnaces.

The strength of furnaces made of steel, and corrugated on Fox's or Morison's plans, to be calculated from

$$\frac{1{,}259 \times (T - 2)}{D} = \text{working pressure in lbs. per square inch.}$$

The strength of ribbed furnaces (with ribs 9 inches apart) to be calculated from the following formula:—

$$\frac{1{,}160 \times (T - 2)}{D} = \text{working pressure in lbs. per square inch.}$$

The strength of spirally corrugated furnaces to be calculated from the following formula:

$$\frac{912 \times (T - 2)}{D} = \text{working pressure in lbs. per square inch.}$$

Where T = thickness of plate in sixteenths of an inch.
D = outside diameter of corrugated furnaces, or outside diameter of the plain parts of ribbed furnaces in inches.

The strength of Holmes' Patent Furnaces, in which the corrugations are not more than 16 inches apart from centre to centre, and not less than 2 inches high, to be calculated from the following formula:—

$$\text{Working pressure in lbs. per square inch} = \frac{945 \times (T - 2)}{D}.$$

Where T = thickness of plain portions of furnace in sixteenths of an inch.
D = outside diameter of plain parts of the furnace in inches.

Donkey Boilers.—The iron used in the construction of the fire boxes, uptakes, and water tubes of donkey boilers shall be of good quality, and to the satisfaction of the Surveyors, who may, in any cases where they deem it advisable, apply the following tests:—

Thickness of Plates.	To bend cold through an angle of	
	With the Grain.	Across the Grain.
$\frac{5}{16}$	80°	45°
$\frac{6}{16}$	70°	35°
$\frac{7}{16}$	55°	25°
$\frac{8}{16}$	40°	20°

The material to stand bending *hot* to an angle of 90 degrees over a radius of not less than $1\frac{1}{2}$ times the thickness of the plates.

Steel.—In cases where it is proposed to construct boilers of steel for classed vessels, or vessels intended for classification, the material is required to fulfil the following conditions:—

1. The material to have an ultimate tensile strength of not less than 26 and not more than 30 tons per square inch of section.
2. A strip cut from every plate used in the construction of the furnaces and combustion chambers, and strips cut from other plates taken indiscriminately, heated uniformly to a low cherry-red, and quenched in water of 82 degrees Fahrenheit, must stand bending to a curve of which the inner radius is not greater than one and a half times the thickness of the plates tested.
3. All the holes to be drilled, or if they be punched the plates to be afterwards annealed.
4. All plates that are dished or flanged, or in any way worked in the fire, except those that are in compression, to be annealed after the operations are completed.

The Surveyors will be guided in fixing the working pressure by the tables and formulæ annexed.

Any novelty in the construction of the machinery or boilers to be reported to the Committee.

The boilers, together with the machinery, to be inspected at different stages of construction.

The boilers to be tested by hydraulic pressure, in the presence of the Engineer Surveyor, to twice the working pressure, and carefully gauged while under test.

Two safety valves to be fitted to each boiler and loaded to the working pressure in the presence of the Surveyor. If common valves are used, their combined areas to be at least half a square

inch to each square foot of grate surface. If improved valves are used, they are to be tested under steam in the presence of the Surveyor; the accumulation in no case to exceed 10 per cent. of the working pressure.

An approved safety valve also to be fitted to the superheater.

In winch boilers one safety valve will be allowed, provided its area be not less than half a square inch per square foot of grate surface.

Each valve to be arranged so that no extra load can be added when steam is up, and to be fitted with easing gear, which must lift the valve itself. All safety-valve spindles to extend through the covers and be fitted with sockets and cross handles, allowing them to be lifted and turned round in their seats, and their efficiency tested at any time.

Stop-valves to be fitted so that each boiler can be worked separately.

Each boiler to be fitted with a separate steam-gauge, to accurately indicate the pressure.

Each boiler to be fitted with a blow-off cock independent of that on the vessel's outside plating.

Cocks, Pipes, and Sea Connections.—With a view to ensuring better control over cocks, valves, and pipes connecting the engines and boilers with the sea, they are to be fixed as follows, viz.:—

All sea-cocks to be fitted on the plating of the vessel above the level of the stoke-hold and engine-room platforms, or attached to Kingston valves of a height sufficient to lift them up to the level of these platforms.

The bolts securing all cocks or sea connections to the plating of the vessel are to be tapped into the plating of the vessel, or fitted with countersunk heads.

The blow-off cocks on the plating of the vessel are to be fitted with spigots passing through the plating, and a brass or gun-metal ring on the outside. The cocks are to be so constructed that the key or spanner can only be taken off when the cock is shut.

All discharge-pipes to be, if possible, carried above the deep load-line, and to have discharge-valves fitted on the plating of the vessel in an accessible position.

No pipes to be carried through the bunkers without being properly protected.

Bilge suction-pipes to be arranged to pump direct from each compartment, the roses to be fixed in places where they can be easily accessible.

Cocks and valves connecting all suction pipes to be fixed above the stoke-hold and engine-room platforms.

The arrangement of pumps, bilge injections, suction and delivery pipes, to be such as will not permit of water being run from the sea into the vessel by an act of carelessness or neglect. Any defective arrangement to be reported to the Committee.

APPENDIX E.

Board of Trade Rules for Boilers.

The Surveyor's Duty and Responsibility in Fixing Pressures.—The Surveyor is required by the Act to fix the limits of weight to be placed on the safety-valves of passenger steamships. In performing this most responsible and onerous duty, he must be very careful, as in the event of accident it will be necessary for him to satisfy the Board of Trade that he used due caution. On the one hand he must be careful as regards safety, and on the other hand he must not unduly reduce the pressure on a boiler. The Surveyor having himself fixed the limits of the weight, is then required to declare, that in his judgment the boiler and machinery are sufficient for the service intended, and in good condition, and that they will be sufficient for twelve months, or such other period as he may, in his judgment, determine. For his guidance the following suggestions are given, and he should not depart from them in any case without first reporting, specially, to the Board of Trade with full particulars, and asking for instructions.

Working Pressure to be Fixed by Calculation, &c.—The Surveyor should fix the working pressure for boilors by a series of calculations of the strength of the various parts, and according to the workmanship and material. The Board of Trade were requested by certain shipbuilders and shipowners to arrange for receiving for examination by their Surveyors plans and particulars of the boilers before the commencement of manufacture, by these means hoping to prevent questions arising after the boilers are finished and on board. This practice has been found to work well in saving time to the Surveyors, and in preventing expense, inconvenience, and delay to owners. The senior Engineer Surveyors should, therefore, receive and report on any plans of boilers intended for passenger vessels that may be submitted in due course with the Form Surveys 6. They are not to report on any tracing or plan that is not accompanied by that form. When the Surveyor has received plans and tracings of new boilers, or of alterations of boilers, and has approved of them, he will of course be careful in making his examinations from time to time to see that they are followed in construction. When he has not had the plans submitted, but is called in to survey a boiler, he will then measure the parts, note the details of construction, and if necessary bore the plates to ascertain their thickness, &c., before he gives his declaration. And in the event of any novelty in construction, or of any departure from the practice of staying and strengthening noted in these regulations, he should report full particulars to the Board of Trade before fixing the working pressure.

The Surveyor cannot declare a boiler to be safe of whose construction, material, and workmanship he is not fully informed. He should, therefore, be very careful how he ventures to give a declaration for a boiler that he is not called in to survey until after it is completed and fixed in the ship.

In the case of new boilers, the Surveyors may allow a stress not exceeding 7,000 lbs. per square inch of net section on solid iron screwed stays supporting flat surfaces, but the stress should not exceed 5,000 lbs. when the stays have been welded or worked in the fire.

Girders for Flat Surfaces.—When the tops of combustion boxes or other parts of a boiler are supported by solid rectangular girders, the following formula, which is used by the Board of Trade, will be useful for finding the working pressure to be allowed on the girders, assuming that they are not subjected to a greater temperature than the ordinary heat of steam, and in the case of combustion chambers that the ends are fitted to the edges of the tube plate, and the back plate of the combustion box:—

$$\frac{C \times d^2 \times T}{(W - P)\, D \times L} = \text{Working pressure}$$

W = Width of combustion box in inches.
P = Pitch of supporting bolts in inches.
D = Distance between the girders from centre to centre in inches.
L = Length of girder in feet.
d = Depth of girder in inches.
T = Thickness of girder in inches.
N = Number of supporting bolts.

$C = \frac{N \times 1{,}000}{N + 1}$ when the number of bolts is odd.

$C = \frac{(N + 1)\, 1{,}000}{N + 2}$ when the number of bolts is even.

The working pressure for the supporting bolts, and for the plate between them, shall be determined by the rule for ordinary stays.

Plates for Flat Surfaces.—The pressure on plates forming flat surfaces will be easily found by the following formula, which is used by the Board of Trade:—

$$\frac{C \times (T + 1)^2}{S - 6} = \text{Working pressure.}$$

T = Thickness of the plate in sixteenths of an inch.
S = Surface supported in square inches.
C = Constant according to the following circumstances:
C = 160 when the plates are not exposed to the impact of heat or flame, and the stays are fitted with nuts and doubling-plates of the same thickness as the plates they cover, and not less in width than two-thirds of the pitch of the stays.

Note.—When doubling-plates cover the whole of the flat surface, the case should be submitted for the consideration of the Board.

C = 150 when the plates are not exposed to the impact of heat or flame, and the stays are fitted with nuts and washers, the latter on the outside of boiler, being at least two-thirds the pitch of the stays in diameter, and the same thickness as the plates they cover. These washers to be riveted on the plate.

C = 100 when the plates are not exposed to the impact of heat or flame, and the stays are fitted with nuts and washers, the latter being at least three times the diameter of the stay and two-thirds the thickness of the plates they cover.

C = 90 when the plates are not exposed to the impact of heat or flame, and the stays are fitted with nuts only.

C = 60 when the plates are exposed to the impact of heat or flame, and steam in contact with the plates, and the stays fitted with nuts and washers, the latter being at least three times the diameter of the stay and two-thirds the thickness of the plate they cover.

C = 54 when the plates are exposed to the impact of heat or flame, and steam in contact with the plate, and the stays fitted with nuts only.

C = 80 when the plates are exposed to the impact of heat or flame, with water in contact with the plates, and the stays screwed into the plate and fitted with nuts.

C = 60 when the plates are exposed to the impact of heat or flame, with water in contact with the plate, and the stays screwed into the plate, having the ends riveted over to form a substantial head.

C = 36 when the plates are exposed to the impact of heat or flame, and steam in contact with the plates, with the stays screwed into the plate, and having the ends riveted over to form substantial heads.

Compressive strain on iron tube plates.—

$$\frac{(D - d)\ T \times 16{,}000}{W \times D} = \text{Working pressure.}$$

D = Least horizontal distance between centres of tubes in inches.
d = Inside diameter of ordinary tube in inches.
T = Thickness of tube plate in inches.
W = Extreme width of combustion box in inches from front of tube plate to back of fire box, or distance between combustion box tube plates when boiler is double-ended and the box common to the furnaces at both ends.

For Steel Plates.—Twenty-five per cent. to be added to the above constants in all cases where nuts are fitted to the stays.

Ten per cent. to be added to the above constants in the cases where no nuts are fitted.

In cases where plates are stiffened with T or L irons, and a greater pressure is required for the plate than is allowed by the use of the above constants, the case should be submitted for the consideration of the Board of Trade.

When the riveted ends of screwed stays are much worn, or when the nuts are burned, the constants should be reduced; but the Surveyor must act according to the circumstances that present themselves at the time of survey, and it is expected that in cases where the riveted ends of screwed stays in the combustion boxes and furnaces are found in this state, it will be often necessary to reduce the constant 60 to about 36.

Wet-bottomed Boilers.—Having regard to the explosion of the boilers of the "Fanny" and "Druid," and to many cases in which very serious defects have been discovered, the Surveyors should take care that wet-bottomed boilers, the outside of the bottom of which cannot be seen, are lifted for inspection at least once in every four years, or oftener if the Surveyor considers it essential. It will often be found necessary long before this to reduce the pressure, unless the boilers are lifted from their seats for the Surveyor to judge of their efficiency. If the owners in any special case have any good reason for not wishing to lift them when the Surveyor requires it, the Surveyor should submit the whole case in detail to the Board of Trade for their consideration. The Surveyor must recollect that he is not to certify as sufficient any boiler respecting which he cannot thoroughly satisfy himself.

Cylindrical Boilers.—It has been represented to the Board of Trade that boilers well constructed, well designed, and made of good material, should have an advantage in the matter of working pressure over boilers inferior in any of the above respects, as unless this is done the superior boiler is placed at a disadvantage, and good workmanship and material will be discouraged. The Board of Trade Surveyors have endeavoured for some time to take all these points into consideration in fixing pressure, and for this purpose the following rules were prepared, and, at the request of engineering firms, subsequently circulated.

When cylindrical boilers are made of the best material, with all the rivet holes drilled in place, and all the seams fitted with double butt straps, each of at least $\frac{5}{8}$ the thickness of the plates they cover, and all the seams at least double-riveted with rivets having an allowance of not more than 75 per cent. over the single shear, and provided that the boilers have been open to inspection during the whole period of construction, then 5 may be used as the factor of safety. The tensile strength of the iron is to be taken as equal to 47,000 lbs. per square inch with the grain, and 40,000 lbs. across the grain. The boilers must be tested by hydraulic pressure to twice the working pressure in the presence and to the satisfaction

of the Board's Surveyors. But when the above conditions are not complied with, the additions in the following scale must be added to the factor 5, according to the circumstances of each case :—* *

A†	·15	To be added when all the holes are fair and good in the longitudinal seams, but drilled out of place after bending.
B†	·3	To be added when all the holes are fair and good in the longitudinal seams, but drilled out of place before bending.
C	·3	To be added when all the holes are fair and good in the longitudinal seams, but punched after bending.
D	·5	To be added when all the holes are fair and good in the longitudinal seams, but punched before bending.
E*	·75	To be added when all the holes are not fair and good in the longitudinal seams.
F	·1	To be added if the holes are all fair and good in the circumferential seams, but drilled out of place after bending.
G†	·15	To be added if the holes are fair and good in the circumferential seams, but drilled before bending.
H	·15	To be added if the holes are fair and good in the circumferential seams, but punched after bending.
I†	·2	To be added if the holes are fair and good in the circumferential seams, but punched before bending.
J*	·2	To be added if the holes are not fair and good in the circumferential seams.
K	·2	To be added if double butt straps are not fitted to the longitudinal seams, and the said seams are lap and double-riveted.
L	·1	To be added if double butt straps are not fitted to the longitudinal seams, and the said seams are lap and treble-riveted.
M	·3	To be added if only single butt straps are fitted to the longitudinal seams, and the said seams are double-riveted.
N	·15	To be added if only single butt straps are fitted to the longitudinal seams, and the said seams are treble-riveted.
O	1·0	To be added when any description of joint in the longitudinal seams is single-riveted.
P	·1	To be added if the circumferential seams are fitted with single butt straps and are double-riveted.

* * NOTE.—If the iron be tested and the elongation measured in a length of 10 inches is not less than 14 per cent., with, and 8 per cent. across the grain, and the Surveyors' otherwise satisfied as to the quality of the plates and rivets, then 4·5 may be used instead of 5, and the minimum actual tensile strength of the plates used in calculating the working pressure.

Q	·2	To be added if the circumferential seams are fitted with single butt straps and are single-riveted.
R	·1	To be added if the circumferential seams are fitted with double butt straps and are single-riveted.
S‡	·1	To be added if the circumferential seams are lap joints and are double-riveted.
T	·2	To be added if the circumferential seams are lap joints and are single-riveted.
U	·25	To be added when the circumferential seams are lap and the strakes of plates are not entirely under or over.
V‡	·3	To be added when the boiler is of such a length as to fire from both ends, or is of unusual length, such as flue boilers; and the circumferential seams are fitted as described opposite P, R, and S; but of course when the circumferential seams are as described opposite Q and T, V ·3 will become V ·4.
W*	·4	To be added if the seams are not properly crossed.
X*	·4	To be added when the iron is in any way doubtful, and the Surveyor is not satisfied that it is of the best quality.
Y††	1·65	To be added if the boiler is not open to inspection during the whole period of its construction.

†When the holes are to be rimered or bored out in place, the case should be submitted to the Board, as to the reduction or omission of A, B, G, and I, as heretofore.

‡ When the middle circumferential seams are double strapped and double-riveted, or lap and treble-riveted, and the calculated strength not less than 65 per cent. of the solid plate S ·1 and V ·3 may be omitted. The end circumferential seams in such cases should be at least double rivetted.

†† When surveying boilers that have not been open to inspection during construction, the case should be submitted to the Board as to the factors to be used.

Where marked * the allowance may be increased still further if the workmanship or material is very doubtful or very unsatisfactory.

The strength of the joints is found by the following method:—

$$\frac{(\text{Pitch} - \text{diameter of rivets}) \times 100}{\text{Pitch}} = \left\{ \begin{array}{l} \text{Percentage of strength of} \\ \text{plate at joint as compared} \\ \text{with the solid plate.} \end{array} \right.$$

The maximum pitch of the rivets should not exceed 10 inches.

$$\frac{(\text{Area of rivets} \times \text{No. of rows of rivets}) \times 100}{\text{Pitch} \times \text{thickness of plate}} = \left\{ \begin{array}{l} \text{Percentage of} \\ \text{strength of rivets} \\ \text{as compared with} \\ \text{the solid plate.*} \end{array} \right.$$

Then take iron as equal to 47,000 † lbs. per square inch, and use the smallest of the two percentages as to the strength of the joint, and adopt the factor of safety as found from the preceding scale:

(47,000 † × percentage of strength of joint) × twice the thickness of the plate in inches.

÷ Inside diameter of the boiler in inches × factor of safety
= Pressure to be allowed per square inch on the safety valves.

Rules for Strength of Cylindrical Shells of Boilers.—When using the percentage of strength of plate in the calculation, use the factor of safety 4·5 *plus* additions, on account of the class of work in constructing the shell. But when using the percentage of strength of rivets in the calculation, use the factor of safety 4·5 only, without additions.

The smaller of the two calculations is taken as the strength of the shell.

47,000 lbs. tensile strain of iron with the grain.
40,000 „ „ „ across „
47,000 „ shearing strain of iron rivets.
29 tons tensile strain of steel plates.
23 „ shearing strain of steel rivets when made of material whose tensile strain is not less than 26, or more than 30 tons.

Plates that are drilled in place *must* be taken apart and the burr taken off, and the holes slightly countersunk from the outsides.

Butt straps *must* be cut from plates and *not* from bars, and must be of as good a quality as the shell plates, and for the longitudinal seams *must* be cut across the fibre. The rivet holes may be punched or drilled when the plates are punched or drilled OUT of place, but when drilled in place must be taken apart and the burr taken off, and slightly countersunk from the outside.

In the case of zigzag riveting the strength through the plate diagonally between the rivets is equal to that horizontally between the rivets, when diagonal pitch = $\frac{6}{10}$ horizontal pitch + $\frac{4}{10}$ diameter of rivet.

When single butt straps are used and the rivet holes in them punched, they *must* be one-eighth thicker than the plates they cover.

* If the rivets are exposed to double shear, multiply the percentage as found by 1·75.

† See note, page 518.

The diameter of the rivets *must* not be less than the thickness of the plates of which the shell is made, but it will be found when the plates are thin, or when lap joints or single butt straps are adopted, that the diameter of the rivets should be in excess of the thickness of the plates.

Dished ends that are not truly hemispherical must be stayed; if they are not theoretically equal in strength to the pressure needed they must be stayed as flat surfaces, but if they are theoretically equal in strength to the pressure needed, the stays may have a strain of 10,000 lbs. per effective square inch of sectional area, if welded or worked in the fire, but, if solid, the stays may have a strain of 14,000 lbs. per square inch of net section.

Surveyors will remember that the strength of a sphere to resist internal pressure is double that of a cylinder of the same diameter and thickness.

All man-holes and openings must be stiffened with compensating rings of at least the same effective sectional area as the plates cut out, and in no case should the plate rings be less in thickness than the plates to which they are attached. The openings in the shells of cylindrical boilers should have their shorter axes placed longitudinally. It is very desirable that the compensating rings round openings in flat services be made of L or T iron.

The neutral part of boiler shells under steam domes must be efficiently stiffened and stayed, as serious accidents have arisen from the want of such precautions.

Circular Furnaces.—Circular furnaces with the longitudinal joints welded or made with a butt strap:—

$$\frac{90{,}000 \times \text{the square of the thickness of the plate in inches}}{(\text{Length in feet} + 1) \times \text{diameter in inches (outside)}}$$

= working pressure per square inch, provided it does not exceed that found by the following formula:—

$$\frac{8000 \times \text{thickness in inches}}{\text{diameter in inches (outside)}}.$$

The second formula limits the crushing stress on the material to 4000 lbs. per square inch.

The length to be measured between the rings if the furnace is made with rings.

If the longitudinal joints, instead of being butted, are lap-jointed in the ordinary way, then 70,000 is to be used instead of 90,000, excepting only where the lap is bevelled and so made as to give the flues the form of a *true* circle, when 80,000 may be used.

When the material or the workmanship is not of the best quality, the constants given above must be reduced; that is to say, the 90,000 will become 80,000; the 80,000 will become 70,000; the 70,000 will become 60,000; and when neither the material nor the

workmanship is of the best quality, such constants will require to be further reduced, according to circumstances and the judgment of the Surveyor, as in the case of old boilers. One of the conditions of best workmanship must be that the joints are either double-riveted with single butt straps, or single-riveted with double butt straps, and the holes drilled after the bending is done and when in place, and afterwards taken apart, the burr on the holes taken off, and the holes slightly countersunk from the outside.*

Corrugated Furnaces.—The working pressure for iron corrugated furnaces, practically circular and machine-made, provided the plain parts at the ends do not exceed 6 inches in length, and the plates are not less than $\frac{5}{16}$ inch thick, should not be greater than found by the following formula :—

$$\frac{9{,}000 \times \text{thickness in inches}}{\text{mean diameter in inches}} = \text{working pressure per square inch.}$$

When the furnaces are riveted in two or more lengths the case should be submitted for consideration, as it may be necessary to make a deduction.

Steel Furnaces, Plain and Corrugated.—The furnace constants about 10 per cent. when plain. When new, corrugated and machine-made and practically true circles, the working pressure is found by the following formula, provided that the plain parts at the ends do not exceed 6 inches in length, and the plates are not less than $\frac{5}{16}$ inch thick,

$$\frac{14{,}000 \times T}{D} = \text{working pressure.}$$

T = thickness in inches.

D = outside diameter in inches, measured at the bottom of the corrugations when the furnace is corrugated, or over the plain parts when it is ribbed and grooved.

* The following examples will serve to show the application of the constants for the different cases that may arise:—

Furnaces with butt joints and drilled rivet holes	90,000	when the longitudinal seams are welded.
	90,000	where the longitudinal seams are double-riveted and fitted with single butt straps.
	80,000	where the longitudinal seams are single-riveted and fitted with single butt straps.
	90,000	where the longitudinal seams are single-riveted and fitted with double butt straps.
Furnaces with butt joints and punched rivet holes	85,000	where the longitudinal seams are double-riveted and fitted with single butt straps.
	75,000	where the longitudinal seams are single-riveted and fitted with single butt straps.
	85,000	where the longitudinal seams are single-riveted and fitted with double butt straps.
Furnaces with lapped joints and drilled rivet holes	80,000	where the longitudinal seams are double-riveted and bevelled.
	75,000	" " " " single- " and not bevelled.
	70,000	" " " " " and bevelled.
	65,000	" " " " " and not bevelled.
Furnaces with lapped joints and punched rivet holes	75,000	where the longitudinal seams are double-riveted and bevelled.
	70,000	" " " " single- " and not bevelled.
	65,000	" " " " " and bevelled.
	60,000	" " " " " and not bevelled.

In the case of upright fire boxes of donkey or similar boilers, 10 per cent. should be deducted from the constant given above, applicable to the respective classes of work.

In corrugated furnaces the pitch of the corrugations should not exceed 6 inches, and the depth from top of corrugation outside to bottom of corrugation inside should not be less than 2 inches, and the plates at the ends not unduly thinned in the flanging.

The plates of ribbed and grooved furnaces should be formed by rolling, the ribs should not be less than $1\frac{5}{16}$ inches above the plain parts, the depth of the grooves not more than $\frac{3}{4}$ inch, the length between the centres of the ribs not over 9 inches, and the ends rolled slightly thicker than the plain parts, and not reduced at any part by flanging, &c., below the thickness of the body of the furnace.

(If the furnace is riveted in two or more lengths, the case should be submitted for consideration.)

When horizontal furnaces of ordinary diameter are constructed of a series of rings welded longitudinally, and the ends of each ring flanged and the rings riveted together, and so forming the furnace, the working pressure is found by the following formula, provided the length in inches between the centres of the flanges of the rings is not greater than (135 T − 12), and that the conditions which follow the formula are complied with :—

$$\frac{8{,}800 \times T}{3 \times D}\left(5 - \frac{l + 12}{67{\cdot}5 \times T}\right) = \text{working pressure,}$$

T = thickness of plate in inches.
l = length between centre of flanges in inches.
D = outside diameter of furnace in inches.

The radii of the flanges on the fire side should be about $1\frac{1}{2}$ inches. The depth of the flanges from the fire side should be three times the diameter of the rivet, plus $1\frac{1}{2}$ inches, and the thickness of the flanges should be as near the thickness of the body of the plate as practicable. The distance from the edge of the rivet holes to the edge of the flange should not be less than the diameter of the rivet, and the diameter of the rivets at least $\frac{3}{8}$-inch greater than the thickness of the plate. The depth of the ring between the flanges should be not less than three times the diameter of the rivets, the fire edge of the ring should be about the termination of the curve of flange, and the thickness not less than half the thickness of the furnace plate. Turned rings are such as may be considered a first-class method of construction.

The holes in the flanges and rings should be drilled in place if practicable, but if not drilled in place they should be drilled sufficiently small, and afterwards when in place rimered out until the holes are quite fair, the holes should be slightly tapered and the heads of the rivets of moderate size.

After all welding, and after all flanging and heating, each ring should be efficiently annealed in one operation.

Steel Stays.—Not to be welded without special sanction and testing. 9,000 lbs. stress on every effective square inch of sectional area of stay is allowed.

Steel Boilers.—The rivet section of rivets if of iron in longitudinal

seams, in cylindrical shells where lapped and at least double-riveted, should not be less than $1\frac{5}{8}$ times the net plate section.

Cylindrical Superheaters.—The strength of the joints and the factor of safety is found in a similar manner as for cylindrical boilers and steam receivers; but instead of using 47,000 lbs. as the tensile strength of iron, 30,000 lbs. is adopted, unless where the heat or flame impinges at, or nearly at, right angles to the plate, then 22,400 lbs. is substituted.

In all cases the internal steam pipes should be so fitted that the steam, in flowing to them, will pass over all the plates exposed to the impact of heat or flame.

Superheaters should, as regards survey, be deemed to be the most important part of the boilers, and must be inspected inside and outside; those that cannot be entered (on account of their size) must have a sufficient number of doors through which a thorough inspection of the whole of the interior can be made.

Special attention should be paid to the survey of superheaters, as with high pressure the plates may become dangerously weak, and not give any sound to indicate their state when tested with a hammer; the plates should therefore be occasionally drilled.

Drilling of furnace and lower parts of combustion box plates, shell plates, &c., should be done when considered necessary in order to ascertain their actual thickness.

When a superheater is constructed with a tube subject to external pressure, the working pressure should be ascertained by the rules given for circular furnaces, but the constants should be reduced as 47 to 30.

Before commencing the survey, it is prudent to question the engineer officers as to the tendency of the boilers to flame; if flaming is a frequent occurrence, extra care must be taken in the survey and in fixing the pressure to be allowed, as the tensile strength of the plate is often reduced to about 4 tons per square inch. Drain pipes must in all cases be fitted to superheaters in which a collection of water in the bottom is possible.

Superheaters that can be shut off from the main boilers must be fitted with a parliamentary safety-valve of sufficient size, but the least size passed without special written authority should be 3 inches in diameter.

The flat ends of all boilers, as far as the steam space extends, and the ends of superheaters, should be fitted with shield, or baffle plates, where exposed to the hot gases in the uptake; as all plates subjected to the direct impact of heat or flame are liable to get injured, unless covered with water.

Donkey Boilers.—Donkey boilers that are in any way attached to, or connected with, the main boilers, or with the machinery used for propelling the vessel, must be surveyed and be fitted the same way as the main boilers, and have a water and steam gauge, and all other fittings complete, and, as regards safety-valves, must comply with the same regulations as the main boilers.

Haystack Boilers.—As the uptakes of haystack boilers and others of this type are especially liable to injury from overheating, unless careful precautions are taken while steam is being raised, the Surveyors should in all cases endeavour to persuade makers and owners to make the strength of the uptakes considerably in excess of that required for ordinary superheaters subject to external pressure.

The employment of Bowling rings is beneficial by adding to the strength as well as allowing for expansion, but if there is a difficulty in getting these fitted, hoops riveted round, although not so desirable as Bowling rings, can be employed to increase the resistance of the tubes against collapse. The use of Bowling rings with a moderate thickness of plate is better than very thick plating. This applies to the uptakes of all boilers of this type, including ordinary vertical donkey boilers. Bowling rings fitted to all such uptakes would be a decided advantage in allowing for expansion. When flaming coal is used, extra care is required and extra strength absolutely necessary.

Steel Boilers.—The following should guide the Board's Surveyors when the general quality of the steel has been found suitable for marine boilers :—

Maker's tests.—The steel-makers or boiler-makers should test one or more strips cut from *each* plate for tensile strength and elongation, and stamp both results on a part of the plate where they can be easily seen when the boiler is constructed.

Surveyor's tests.—The Surveyor is not obliged to witness the foregoing tests, although it is very desirable that he should when his other duties will allow him to do so, but he should, however, select at least one in four of these plates, either at the steel works or the boiler-makers' works, and witness the testing of at least one strip cut from each selected plate.

When shell plates exceed 15 feet in length, there should be a tensile test from each end, and when they exceed 20 feet in length, and, at the same time, exceed 6 feet in breadth, or exceed 2½ tons in weight, there should be a tensile test from each corner.

In the latter cases the testing of each plate should be witnessed by the Surveyor. The mean of the results of the tests, if the latter fall within the Board's requirement, as stated below, should be stamped on the plates. If a large number of failures take place in the 25 per cent. selected, the Surveyor should see more than 25 per cent. of the plates to be used in the boiler satisfactorily tested.

Rivet tests.—A few rivets of each size should be selected, and should be turned and tested for tensile stress. The tensile stress should be from 27 tons to 32 tons per square inch, with a contraction of area of about 60 per cent.

Tensile and bending tests.—If for the plates from which the Surveyor selects the above proportions a greater stress is wished than is allowed for iron, tests for tensile stress and elongation should be made, and those for which no reduction of thickness is asked may

be tested for resistance to bending, if preferred. In the latter case, the tensile stress and elongation stamped on each plate should be reported by the Surveyor to the Board of Trade, along with the results of the bending tests.

Test strips.—The breadth of test strips for tensile stress should be about 2 inches, and the elongation, taken in a length of 10 inches, should be about 25 per cent., and not less than 20 per cent. The test strips must be carefully prepared and measured, and they should be cut from the plate by a planing or shaping machine.

Bending tests.—The bending tests for plates *not* exposed to flame should be made with strips in their normal condition, but strips cut from furnaces, combustion boxes, &c., should be heated to a cherry red, then plunged into water of about 80° and kept there until of the same temperature as the water, and then bent. The bending strips should not be less than 2 inches broad and 10 inches long, and they should be bent until they break, or until the sides are parallel at a distance from each other of not less than (3) three times the thickness of plate.

Tensile stress, &c.—The tensile stress of the plates *not* exposed to flame should be not less than 27 tons, and should not exceed 32 tons, per square inch of section, and 27 tons should be the stress used in the calculations for cylindrical shells if the plates comply with all the conditions as stated herein; but for each ton the minimum tensile strength of the plate is above 27 tons, 1 ton may be added to the 27, provided the Surveyor witnesses the testing of all the plates.

The tensile stress of furnace, flanging, and combustion box plates may range from 26 to 30 tons per square inch.

Annealing.—All plates that are punched, flanged, or locally heated must be carefully annealed after being so treated.

Perforating and annealing.—The rivet holes in the furnaces and longitudinal seams of cylindrical shells should be *drilled*, but if it is wished to punch them and afterwards bore or anneal the plates in a proper furnace, the particulars of the punching and boring or annealing should be submitted to the Board of Trade for consideration before being done, but all punched holes should be made after bending.

In all cases where assent has been given for plates to be punched after bending and then annealed, the makers should stamp the plates with the words, "punched after bending and then annealed," and in all cases where assent has been given for punching and afterwards boring plates, the words, "punched and then bored," should be stamped on the plates.

Stress on stays.—Bars for stays should be tested. Solid steel screwed stays which have *not* been welded or otherwise worked after heating, may be allowed a working stress of 9,000 lbs. per square inch of net section, provided the tensile stress is from 27 to 32 tons per square inch, and the elongation in 10 inches about 25 per cent. and not less than 20 per cent. Steel stays which have been welded or worked in the fire have been found to be not reliable, therefore they should *not* be passed.

Constants for flat surfaces.—If the flanging plates and those exposed to flame comply with the foregoing conditions, the constants in the Board's rules for iron boilers may be increased as follows:—

The constants for flat surfaces when they are supported by stays screwed into the plate and riveted, 10 per cent.

The constants for flat surfaces when they are supported by stays screwed into the plate and nutted, or when the stays are nutted in the steam space, 25 per cent. This is also applicable to the constants for flat surfaces stiffened by riveted washers or doubling strips, and supported by nutted stays.

The constants for combustion box girders, 10 per cent.

Compressive stress on tube plates.—A greater compressive stress should not be allowed on tube plates than that found by the following formula:—

$$\frac{(D - d)\ T \times 20{,}000}{W \times D} = \text{Working pressure.}$$

D = Least horizontal distances between centres of tubes in inches.
d = Inside diameter of tubes in inches.
T = Thickness of tube plate in inches.
W = Extreme width of combustion box in inches from front of tube plate to back of fire box, or distance between combustion box tube plates when boiler is double-ended and the box common to the furnaces at both ends.

Plate and rivet section.—The rivet section, if of iron, in the longitudinal seams of cylindrical shells where lapped and at least double-riveted, should not be less than $\frac{13}{8}$ times the net plate section, but if steel rivets are used, their section should be at least $\frac{28}{23}$ of the net section of the plate if the tensile stress of the rivets is not less than 27 tons and not more than 32 tons per square inch. Therefore, in calculating the working pressure, the percentage strength of the rivets may be found in the usual way by the Board's rules, but in the case of iron rivets, the percentages found should be divided by $\frac{13}{8}$, and in the case of steel rivets by $\frac{28}{23}$, the results being the percentages required. If the percentage strength of the rivets by calculation is less than the calculated percentage strength of the plate, calculate the working pressure by both percentages. When using the percentage strength of the plate, use the nominal factor of safety suitable for the method of construction as by the Board's rules for iron boilers, but when using the percentage strength of the rivets, use 4·5 as the factor of safety. The less of the two pressures so found is the working pressure to be allowed for the cylindrical portion of the shell.

Local heating to be avoided.—Local heating of the plates should be avoided, as many plates have failed from having been so treated.

Welding, &c.—Steel plates which have been welded should not be passed if subject to a tensile stress, and those welded and subject to a compressive stress should be efficiently annealed.

In other respects the boilers should comply with the rules for iron boilers.

If the tests are to be made at the steel works, the boiler-makers should inform the Surveyors in their district when and where they will be made, so that a Surveyor from the nearest district to the steel works may be instructed to attend to them. The Surveyors should have due notice—two or three days—when the plates, &c., will be ready for the test pieces to be cut from them. As soon as possible after tests are made, the results should be submitted for the Board's consideration. (Surveyors should report all cases of failures of steel plates, &c., which may come to their knowledge.)

Steel for superheaters, &c.—If steel is proposed to be used in superheaters the particulars should be submitted to the Board of Trade for consideration, but in all cases it should be discouraged for this purpose. This applies to the unshielded uptakes of all boilers, including ordinary vertical donkey boilers.

Makers of steel.—When the steel is not to be made by any of the following makers the case will receive the special consideration of the Board, and this should be specially noted by the Surveyors :—

For Plates and Angles, Stay and Rivet Bars.

Messrs. W. Beardmore & Co.
,, J. Brown & Co.
,, C. Cammel & Co.
,, D. Colville & Sons.
,, The Consett Iron Co., Ltd.
,, The Glasgow Iron and Steel Co., Ltd.
,, The Landore Steel Co.
,, The Leeds Forge Co.
,, The Moir Steel and Iron Co., Ltd.
,, Palmers' Shipbuilding and Iron Co., Ltd.
,, The Steel Co. of Scotland.
,, The Weardale Iron and Coal Co.
,, The West Cumberland Iron and Steel Co.

For Stay and Rivet Bars.

,, The Lanarkshire Steel Co., Ltd.
,, Nettlefolds.
,, John Spencer & Sons, Ltd.
,, Wright, Butler & Co.

Boiler tracings, &c.—Difficulty has been experienced with regard to the survey of steel boilers, owing to the fact that some makers were not aware, at the time the boilers were commenced, that a Board of Trade certificate would be necessary, and the makers have therefore omitted to submit tracings until the boilers have been nearly completed. Tracings of boilers may therefore be received for examination upon payment of the usual fee of £2, and the Surveyors may proceed as far as witnessing the hydraulic test before any further instalment of the survey fee is paid. Engineers and boilermakers should be advised of this arrangement.

APPENDIX F.

CYLINDICAL BOILER SHELLS.

Joints with Drilled Holes.

Formulæ for ordinary chain riveted and ordinary zig-zag riveted joints, and for joints of these descriptions, when every alternate rivet in the outer or in the outer and inner rows have been omitted :—

Let E = distance from edge of plate to centre of rivet in inches.
V = distance between rows of rivets in inches.
V_1 = distance between inner and middle row of rivets in inches for joint J.
B = boiler pressure in lbs. per square inch.
C = 1 for lap or single butt joints.
= 1·75 for double butt joints.
d = diameter of rivets in inches.
D = inside diameter of boiler in inches.
F = factor of safety for shell plates.
n = number of rivets in one pitch.
p_d = diagonal pitch in inches.
P_d = diagonal pitch in inches between inner and middle rows of rivets in inches for joint J.
p = greatest pitch of rivets in inches.
r = percentage of plate left between holes in greatest pitch.
R = percentage of rivet section.
R_1 = percentage of combined plate and rivet section.
S = tensile strength of material in lbs. per square inch of section.
T = thickness of plate in inches.
T_1 = thickness of each butt strap in inches.
% = least value of r, R, or r, R, R_1, as the case may be, divided by 100.

ORDINARY CHAIN AND ZIG-ZAG RIVETED JOINTS.

Iron plates and iron rivets or steel plates and steel rivets —

$$\frac{100(p-d)}{p} = r.$$

Iron plates and iron rivets :—

$$\frac{100 \times d^2 \times \cdot7854 \times n \times \mathrm{C}}{p \times \mathrm{T}} = \mathrm{R}.$$

Steel plates and steel rivets :—

$$\frac{100 \times 23 \times d^2 \times \cdot7854 \times n \times \mathrm{C} \times \mathrm{F}}{4{\cdot}5 \times 28 \times p \times \mathrm{T}} = \mathrm{R}.$$

Given C, d, F, n, T, to find p, so that r and R are equal.

Iron plates and iron rivets :—

$$\frac{d^2 \times \cdot7854 \times n \times \mathrm{C}}{\mathrm{T}} + d = p.$$

Steel plates and steel rivets :—

$$\frac{23 \times d^2 \times \cdot7854 \times n \times \mathrm{C} \times \mathrm{F}}{4{\cdot}5 \times 28 \times \mathrm{T}} + d = p.$$

Given C, F, n, T, r, to find p and d.

Iron plates and iron rivets :—

$$\frac{r \times \mathrm{T}}{(100-r) \times \cdot7854 \times n \times \mathrm{C}} = d.$$

$$\frac{100 \times r \times \mathrm{T}}{(100-r)^2 \times \cdot7854 \times n \times \mathrm{C}} = p.$$

Steel plates and steel rivets :—

$$\frac{5 \times 28 \times r \times \mathrm{T}}{23 \times (100-r) \times \cdot7854 \times n \times \mathrm{C} \times \mathrm{F}} = d.$$

$$\frac{100 \times 5 \times 28 \times r \times \mathrm{T}}{23 \times (100-r)^2 \times \cdot7854 \times n \times \mathrm{C} \times \mathrm{F}} = p.$$

Iron plates and iron rivets or steel plates and steel rivets when d is found first, then :—

$$\frac{100\,d}{100-r} = p.$$

Iron plates and iron butt straps or steel plates and steel butt straps.

Double butt straps :—

$$\frac{5 \times T}{8} = T_1.$$

Single butt straps :—

$$\frac{9 \times T}{8} = T_1.$$

For Distance between Rows of Rivets, &c.

Iron and steel :—

$$\frac{3 \times d}{2} = E.$$

Chain-riveted joints not less than :—

$$2 \times d = V.$$

Zig-zag riveted joints :—

$$\frac{\sqrt{(11\,p + 4\,d)\,(p + 4\,d)}}{10} = V.$$

Diagonal pitch :—

$$\frac{6\,p + 4\,d}{10} = p_D.$$

To determine the Working Pressure.

$$\frac{S \times \% \times 2T}{F \times D} = B.$$

Chain and Zig-zag Riveted Joints in which every alternate Rivet has been omitted in the Outer Row, or in the Outer and the Inner Rows.

Iron plates and iron rivets or steel plates and steel rivets :—

$$\frac{100\,(p - d)}{p} = r;$$

$$\frac{100\,(p - 2\,d)}{p} = r \text{ for inner rows.}$$

Iron plates and iron rivets :—

$$\frac{100 \times d^2 \times \cdot 7854 \times n \times C}{p \times T} = R.$$

Steel plates and steel rivets :—

$$\frac{100 \times 23 \times d^2 \times \cdot7854 \times n \times C \times F}{5 \times 28 \times p \times T} = R.$$

Iron plates and iron rivets or steel plates and steel rivets :—

$$\frac{100\,(p - 2\,d)}{p} + \frac{R}{n} = R_1.$$

For iron lap joints of this description the diameter of the rivet should not be less than

$$\frac{T}{\cdot7854} = d.$$

For steel lap joints of this description the diameter of the rivet should not be less than

$$\frac{T \times 28 \times 5}{\cdot7854 \times 23 \times F} = d.$$

When the Joints are fitted with Single or Double Butt Straps and the Number of Rivets in the Inner Row more than the Number in the Outer Row.

Iron plates and iron butt straps or steel plates and steel butt straps.

Double butt straps :—

$$\frac{5 \times T\,(p - d)}{8 \times (p - 2\,d)} = T_1.$$

Single butt straps :—

$$\frac{9 \times T\,(p - d)}{8 \times (p - 2\,d)} = T_1.$$

When the number of rivets in the inner row is the same as in the outer row.

Double butt straps :—

$$\frac{5 \times T}{8} = T_1.$$

Single butt straps :—

$$\frac{9 \times T}{8} = T_1.$$

For Distance between Rows of Rivets, &c.

Iron and steel :—

$$\frac{3 \times d}{2} = E.$$

Chain riveted joints :—

$$\frac{\sqrt{(11\,p + 4\,d)(p + 4\,d)}}{10} = V$$

or

$$2 \times d = V.$$

The greater of these two values of V to be used. *See Note below.*

Zig-zag riveted joints :—

Diagonal pitch :—

$$\sqrt{(\tfrac{11}{20}\,p + d)\,(\tfrac{1}{20}\,p + d)} = V.$$

For joint J :—

$$\tfrac{3}{10}\,p + d = p_D.$$

$$\frac{\sqrt{(11\,p + 8\,d)\,(p + 8\,d)}}{20} = V_1.$$

Diagonal pitch :—

$$\frac{3\,p + 4\,d}{10} = P_D.$$

To Determine the Working Pressure.

$$\frac{S \times \% \times 2\,T}{F \times D} = B.$$

Note.—The minimum value of V for chain riveted joints is given as $2\,d$, but $\frac{4\,d + 1}{2}$, is more desirable.

Maximum Pitches for Riveted Joints.

T = thickness of plate in inches.

p = maximum pitch of rivets in inches, provided it does not exceed 10 inches.

C = constant applicable from the following table :—

Number of Rivets in one Pitch.	Constants for Lap Joints.	Constants for Double-Butt Strap Joints.
1	1·31	1·75
2	2·62	3·50
3	3·47	4·63
4	4·14	5·52
5	...	6·00

$$(C \times T) + 1\tfrac{5}{8} = p.$$

When the work is first class, such pitches may be adopted as far as safety is concerned; yet, in some cases, it may be well not to adopt the greatest pitch found by the formula. The maximum should *not*, however, exceed 10 inches with the thickest plates for boiler shells.

If in any case the pitch is found to exceed that arrived at by the foregoing formula, for the particular description of joint and thickness of plate, such pitches should *not* be passed, but, in all cases, reported.

APPENDIX G.

Board of Trade Rules for Safety-Valves.

Provisions of the Act as regards safety-valves.—The provisions of the Act relating to safety-valves are in substance as follows:—Every steam-ship of which a survey is required by the Act shall be provided with a safety-valve upon each boiler, so constructed as to be out of the control of the engineer when the steam is up, and if such valve is in addition to the ordinary valve, it shall be so constructed as to have an area not less, and a pressure not greater, than the area of and pressure on that valve.

Cases have come under the notice of the Board of Trade in which steam-ships have been surveyed, and passed by the Surveyors, with pipes between the boilers and the safety-valve chests. Such arrangement is not in accordance with the Act, which distinctly provides that the safety-valves shall be upon the boilers.

The Surveyors are instructed that in all *new boilers*, and whenever *alterations can be easily made*, the valve chest should be placed directly on the boiler; and the neck, or part between the chest and the flange which is bolted on to the boiler, should be as short as possible and be cast in one with the chest.

The Surveyors should note that it is not intended by this instruction that vessels with old boilers which have been previously passed with such an arrangement should be detained for the alterations to be carried out.

Of course in any case in which a Surveyor is of opinion that it is positively dangerous to have a length of pipe between the boilers and the safety-valve chest, it is his duty at once to insist on the requisite alterations being made before granting a declaration.

If any person place an undue weight on the safety-valve of *any* steam-ship, or in the case of steam-ships surveyed under the Act, increase such weight beyond the limits fixed by the engineer-surveyor, he shall, in addition to any other liabilities he may incur by so doing, incur a penalty not exceeding one hundred pounds.

The engineer-surveyor shall declare, amongst other things, the limits of the weight to be placed on the safety-valves; that the safety-valves are such, and in such condition as required by the Act, and that the machinery is sufficient for the service for the time he fixes, and is in good condition for that time.

Area of safety-valves.—The area per square foot of fire-grate surface of the locked-up safety-valves should not be less than that given in the following tables opposite the boiler pressure intended, but in no case should the valves be less than two inches in diameter. This applies to new vessels or vessels which have not received a passenger certificate.

When, however, the valves are of the common description, and are made in accordance with the tables, it will be necessary to fit them with springs, having great elasticity, or to provide other means to keep the accumulation within moderate limits; and as boilers with forced draught may require valves considerably larger than those found by the tables, the design of the valves proposed for such boilers, together with the estimated coal consumption per square foot of fire-grate, should be submitted to the Board for consideration

In ascertaining the fire-grate area, the length of the grate should be measured from the inner edge of the dead plate to the front of the bridge, and the width from side to side of the furnace on the top of the bars at the middle of their length.

In the case of vessels that have not had a passenger certificate, if there is only one safety-valve on any boiler, the Surveyor should not grant a declaration without first referring the case to the Board for special instruction.

SAFETY-VALVE AREAS.

Boiler Pressure.	Area of Valve per square foot of Fire-grate.	Boiler Pressure.	Area of Valve per square foot of Fire-grate.	Boiler Pressure.	Area of Valve per square foot of Fire-grate.
lbs.	sq. in.	lbs.	sq. in.	lbs.	sq. in.
15	1·250	44	·635	73	·426
16	1·209	45	·625	74	·421
17	1·171	46	·614	75	·416
18	1·136	47	·604	76	·412
19	1·102	48	·595	77	·407
20	1·071	49	·585	78	·403
21	1·041	50	·576	79	·398
22	1·013	51	·568	80	·394
23	·986	52	·559	81	·390
24	·961	53	·551	82	·386
25	·937	54	·543	83	·382
26	·914	55	·535	84	·378
27	·892	56	·528	85	·375
28	·872	57	·520	86	·371
29	·852	58	·513	87	·367
30	·833	59	·506	88	·364
31	·815	60	·500	89	·360
32	·797	61	·493	90	·357
33	·781	62	·487	91	·353
34	·765	63	·480	92	·350
35	·750	64	·474	93	·347
36	·735	65	·468	94	·344
37	·721	66	·462	95	·340
38	·707	67	·457	96	·337
39	·694	68	·451	97	·334
40	·681	69	·446	98	·331
41	·669	70	·441	99	·328
42	·657	71	·436	100	·326
43	·646	72	·431	101	·323

SAFETY-VALVE AREAS—*continued.*

Boiler Pressure.	Area of Valve per square foot of Fire-grate.	Boiler Pressure.	Area of Valve per square foot of Fire-grate.	Boiler Pressure.	Area of Valve per square foot of Fire-grate.
lbs.	sq. in.	lbs.	sq. in.	lbs.	sq. in.
102	·320	135	·250	168	·204
103	·317	136	·248	169	·203
104	·315	137	·246	170	·202
105	·312	138	·245	171	·201
106	·309	139	·243	172	·200
107	·307	140	·241	173	·199
108	·304	141	·240	174	·198
109	·302	142	·238	175	·197
110	·300	143	·237	176	·196
111	·297	144	·235	177	·195
112	·295	145	·234	178	·194
113	·292	146	·232	179	·193
114	·290	147	·231	180	·192
115	·288	148	·230	181	·191
116	·286	149	·228	182	·190
117	·284	150	·227	183	·189
118	·281	151	·225	184	·188
119	·279	152	·224	185	·187
120	·277	153	·223	186	·186
121	·275	154	·221	187	·185
122	·273	155	·220	188	·184
123	·271	156	·219	189	·183
124	·269	157	·218	190	·182
125	·267	158	·216	191	·181
126	·265	159	·215	192	·181
127	·264	160	·214	193	·180
128	·262	161	·213	194	·179
129	·260	162	·211	195	·178
130	·258	163	·210	196	·177
131	·256	164	·209	197	·176
132	·255	165	·208	198	·176
133	·253	166	·207	199	·175
134	·251	167	·206	200	·174

Examination of safety-valves.—The Surveyor, in his examination of the machinery and boilers, is particularly to direct his attention to the safety-valves, and, whenever he considers it necessary, he is to satisfy himself as to the pressure on the boiler by actual trial.

The Surveyor is to fix the limits of the weight to be placed on the safety-valves, and the responsibility of not issuing a declaration before he is fully satisfied on the point is very grave. The law places on the Surveyors the responsibility of "declaring" that the boilers are in his judgment sufficient with the weights he states.

The Surveyor is to examine the whole of the valves, weights, and springs at every survey.

The responsibility of seeing to the efficiency of the mode by which

the valves are fitted, so as to be out of the control of the engineer when steam is up, rests with the Surveyor as long as it is efficient, and the method adopted is approved of by the Board of Trade.

The safety-valves should be fitted with lifting gear, so arranged that the two or more valves on any one boiler can at all times be eased together, without interfering with the valves on any other boiler. The lifting gear should in all cases be arranged so that it can be worked by hand either from the engine-room or stoke-hole.

Care should be taken that the safety-valves have a lift equal to at least one-fourth their diameter; that the openings for the passage of steam to and from the valves, including the waste steam pipe, should each have an area not less than the area of valves required by table, pages 535-536; that each valve box has a drain-pipe fitted at its lower part. In the case of lever valves, if the lever is not bushed with brass, the pins must be of brass; iron and iron working together must not be passed. Too much care cannot be devoted to seeing that there is proper lift and free means of escape of waste steam, as it is obvious that unless the lift and means for escape of waste steam are ample, the effect is the same as reducing the area of the valve or putting on an extra load. The valve seats should be secured by studs and nuts.

The Surveyors are, as far as is in their power, to make the opinion of the Board on these points generally known to the owners of passenger steamers.

Surveyor to see valves weighted.—When the Surveyor has determined the amount of pressure he is to see the valves weighted accordingly, and the weights or springs fixed in such a manner as to preclude the possibility of their shifting or in any way increasing the pressure. The limits of the weight on the valves is to be inserted in the declaration, and should it at any time come to a Surveyor's knowledge that the weights or the loading of the valves have been shifted, or otherwise altered, or that the valves have been in any way interfered with, so as to increase the pressure, without the sanction of the Board of Trade, he is at once to report the facts to the Board of Trade.

Spring safety-valves.—If the following conditions are complied with, the Surveyor need raise no question as to the substitution of spring loaded valves for dead weighted valves:—

(1.) That at least two valves are fitted to each boiler.
(2.) That the valves are of the proper size.
(3.) That the springs and valves be so cased in that they cannot be tampered with.
(4.) That provision be made to prevent the valves flying off in case of the springs breaking.
(5.) That the requisite safety-valve area is cased in the usual manner of Government valves.
(6.) That screw lifting gear be provided to ease all the valves.

(7.) That the size of the steel of which the spring is made is to be found by the following formula:—

$$\sqrt[3]{\frac{s \times D}{c}} = d:$$

s = The load on the spring in lbs.
D = The diameter of the spring (from centre to centre of wire) in inches.
d = The diameter, or side of square, of the wire in inches.
c = 8,000 for round steel.
c = 11,000 for square steel.

(8.) That the springs be protected from the steam and impurities issuing from the valves.

(9.) That when valves are loaded by direct springs, the compressing screws abut against metal stops or washers when the loads sanctioned by the Surveyor are on the valves.

(10.) That the springs have a sufficient number of coils to allow a compression under the working load of at least one-quarter the diameter of the valve.

In no case is the Surveyor to give a declaration for spring-loaded valves unless he has examined them and is acquainted with the details of their construction, and unless he has tried them under full steam and full firing for at least 20 minutes with the feed-water shut off and stop-valve closed. In cases where valves of similar design have been previously approved and passed by the Board of Trade, and the Surveyors are fully satisfied with the result of the test under full steam, they need not delay the granting of the declaration for the vessel subject to approval of the Board, care being taken that full particulars of the valves and tests are forwarded to the department by the same post as that by which the declaration is transmitted to the owners. If the accumulation of pressure exceed 10 per cent. of the loaded pressure, he should not give his declaration without first reporting the case to the Board of Trade, accompanied by a sketch, and full particulars of the trial and the strength pressure of the boilers.

In the case of valves, of which the principle and details have already been passed by the Board of Trade, the Surveyor need not require plans to be submitted, so long as the details are unaltered, of which he must fully satisfy himself; but in any new arrangement of valves, or in any case in which any detail of approved valves is altered, he should, before assuming the responsibility of passing them, report particulars, with a drawing to scale, to the Board of Trade. He can make this drawing himself from the actual parts of the valves fitted, but in order to save time, and to facilitate the survey, the owners or makers of engines may prefer to send in tracings of their own, before the valves are placed on the

boiler. If they do this, the survey can be more readily made, and delay and expense may be saved to owners, as the Surveyor will not then have to spend his time, and delay the ship, in preparing drawings and comparing them with the valves.

The tracings of new safety-valve designs should, if possible, be transmitted to the Board of Trade for consideration before the construction of the safety-valves is commenced.

In some spring valves the accumulation of pressure has reached cent. per cent., and therefore, if the Surveyor had not required a trial, he would have passed valves which would have caused a pressure on the boiler double that intended by him. And in some cases in which the increase of pressure has not been great, defects that would have rendered the valves highly dangerous have been discovered on an examination of drawings.

The Surveyors should arrange with manufacturers so that the Surveyors may have the designs of valves which the manufacturers intend to use. An easy method of facilitating this matter is for the manufacturer to leave in the local Surveyor's office a plan or plans of his valve or valves when once agreed to, and then afterwards to inform the Surveyor that the valves fitted are according to drawing A, B, or C, as the case may be. By this means, when once a design has been agreed upon, and is adhered to, all subsequent questions and delays will be prevented.

Owners, masters, and engineers to see that valves are kept in proper order.—It is clearly the duty of the masters and engineers of vessels to see, in the intervals between the surveys, that the Government safety-valve or valves, as well as the other safety-valves and the rest of the machinery, are in proper working order. There is no provision in the Merchant Shipping Act, 1854, exempting the owner of any vessel, on the ground that she has been surveyed by the Board of Trade Surveyors, from any liability, civil or criminal, to which he would otherwise be subject. The Act of Parliament requires the Government safety-valve to be out of the control of the engineer when the steam is up; this enactment, far from implying that he is not to have access to it, and to see to its working, at proper intervals when the vessel is in port, rather implies the contrary; and the master should take care that the engineer has access to it for that purpose. A substantial lock that cannot be easily tampered with, and as far as possible weather-proof, should be used for locking up the safety-valve boxes.

All tests for pressure and accumulation are to be made with Board of Trade gauges.—In witnessing the hydraulic tests of boilers, &c., and in witnessing all safety-valve tests for accumulation of pressure, the Surveyors are to use the pressure-gauges supplied by the Board of Trade for the purpose.

THE following is a List of the Names of Spring Safety-Valve Makers whose Standard Designs have been approved by the Board of Trade:—

Names of Firms whose Standard Designs have been approved.	Address.	Diameters of Valves included in Standard Designs.
Adams, Thomas,	Manchester,	2″ to 6″
Alley & MacLellan,	Glasgow,	2″ to 6″
Allsup & Sons,	Preston,	3″ to 4½″
Amos & Smith,	Hull,	2″ to 5″
Bailey & Leetham,	Hull,	3″, 3¼″, and 4½″
Bailey & Co., W. H.,	Manchester,	2″ to 6″
Blair & Co.,	Stockton-on-Tees,	3″ to 4″ and 6¼″
Bow, M'Lachlan, & Co.,	Paisley,	2″ to 4″
Central Marine Engineering Co.,	West Hartlepool,	3″ to 4″
Clarke, E., & Co.,	Brimscombe, nr. Stroud,	2″
Clark, Geo.,	Sunderland,	3″ to 5¾″
Clarke, Chapman, & Gurney,	Gateshead-on-Tyne,	3″
Cochran & Co.,	Birkenhead,	2″ to 3″
Cockburn, D.,	Glasgow,	2″ to 6½″
Cockburn & Co., George,	Glasgow,	2″ to 6½″
Coe, W. J.,	Liverpool,	3″ to 6⅞″
Cox & Co.,	Falmouth,	2″ to 3¼″
Dansey & Robinson,	London,	2″
Davis, G.,	Abingdon,	2″
Day, Summers, & Co.,	Southampton,	2″ to 5⅛″
Dickinson & Sons, John,	Sunderland,	3″ to 3½″
Dixon, R., & Co.,	Middlesbrough,	2⅜″ to 3″
Earle's Shipbuilding Co.,	Hull,	3″ to 6″
Empire Company,	Manchester,	2″ to 6″
Fletcher, John,	Ashton-under-Lyne,	3″ to 4″
Fraser & Co., A. B.,	Liverpool,	3″ to 5½″
Gourlay Brothers & Co.,	Dundee,	2″ to 2½″ and 3¼″ to 5 5/16″
Hall, Russell, & Co.,	Aberdeen,	3″ to 4¼″
Harding, Cooks, & Co.,	London,	3″ to 5″
Harvey & Co.,	Hayle,	3″ to 4½″
Hawthorn, R. & W.,	Newcastle-on-Tyne,	4″
Henderson, D. & W.,	Glasgow,	3″ to 6½″
Hepple & Co.,	North Shields,	4½″
Holmes & Co., C. D.,	Hull,	4½″
Hopkinson, J., & Co.,	Huddersfield,	2″ to 6½″
Hunt, Milton, & Co.,	Birmingham,	2″ to 6″
Lobnitz & Co.,	Renfrew,	4″
London and Glasgow Engineering Co.,	Glasgow,	3″ to 6″
Noakes & Sons, T.,	London,	2″
Palmer's Shipbuilding Co.,	Jarrow-on-Tyne,	3″ to 5½″

LIST OF NAMES—*Continued.*

Names of Firms whose Standard Designs have been approved.	Address.	Diameters of Valves included in Standard Designs.
Pattison, G. A.,	Liverpool,	3″ to 6½″
Paul, M., & Co.,	Dumbarton,	2″
Plenty & Sons,	Newbury,	2″ and 3″
Pollock & Macnab,	Manchester,	2″ and 3″ to 6½″
Rennoldson, J. P.,	South Shields,	3″ and 4″
Richardson & Sons, T.,	Hartlepool,	3¾″ to 5¾″
Roger & Co., Robert,	Stockton-on-Tees,	2⅞″ to 3¼″
Royal Mail Steam Packet Co.,	Southampton,	3″ to 5½″
Shepherd & Co.,	Liverpool,	2″ to 6″
Simpson, Strickland, & Co.,	Dartmouth,	2″
Sissons, W., & Co.,	Gloucester,	2″ to 2½″
Stephenson & Co., Robert,	Newcastle-on-Tyne,	3″ to 6″
Stevenson & Co., J. C.,	Preston,	3″
Taylor & Co., James,	Birkenhead,	3″
Turnbull & Co., Alex.,	Glasgow,	3″ to 6½″
Tyne General Ferry Co.,	Newcastle-on-Tyne,	3⅝″
Wallsend Slipway Co.,	Wallsend-on-Tyne,	4″ and 4½″
Westgarth, English, & Co.,	Middlesbrough,	3″ to 3½″

APPENDIX H.

Admiralty Rules for Steel Boilers and Materials and their Tests.

Admiralty rule for working pressure provides that the water-pressure test shall not exceed $\frac{4}{9}$ of the ultimate strength of the shell, or a factor of safety of $2\frac{1}{4}$, when subjected to water test pressure, and the working steam pressure is fixed at 90 lbs. below the test pressure, which is called their "constant margin" of safety for all pressures.

Supervision of Boiler Work.

The following instructions to boiler-maker overseers are those usually given in Admiralty specification :—

The boilers will be subject to the supervision of an overseer, who will be directed to attend on the premises of the contractors during the progress of the work on the boilers, to examine the material and workmanship used in their construction, to witness the prescribed tests, and to see that this specification, as regards the boilers and work in connection, is conformed to in all respects by the contractors. The extent of supervision is described in the following paragraphs extracted from Admiralty instructions to overseers, and the contractors are to afford him every facility for their proper execution.

The plates and other material used in the construction of the boilers to be subjected to such tests as may be directed in the specification. Every plate used is to be carefully examined by the overseer for laminations, blisters, veins, and other defects, and to ensure that it is of the proper thickness and brand. No plate, angle, &c., which from any cause is considered by the overseer to be unfit for the intended use is to be fitted.

During the construction of the various parts of the boilers, the overseer is to satisfy himself that the dimensions as shown on the approved drawings are being adhered to by the contractors.

Whenever plates are flanged or welded, or in any case where iron or steel is worked in such manner that it is particularly liable to suffer in strength unless carefully handled, the overseer is to be present if possible on all occasions during the time the work on each article is in progress, and he is to fully satisfy himself that it is sound before he allows any part to be put in the boilers.

Samples of the rivets being used for the boilers are to be taken by the overseer during the progress of the work and tested as specified hereafter, and any batches of rivets found defective are to be rejected. Before rivets are put in, the overseer is to see that the plates are brought properly together, and that the holes are fair with one another. He is not to allow drifting on any account, but he is to see that they are carefully rimmed fair where necessary. He is also to make sure during the progress of the work that the rivets fill the holes completely, and that the heads are properly set up, well formed, and finished.

The overseer is to see that all internal parts of the boiler are riveted with rivets having heads and points of approved shape, and that any seams he considers necessary are riveted on the fire side. No snap heads are to be allowed in the internal parts. Any proposal for hydraulic riveting the internal parts is to be submitted to the Admiralty, with sketch of the proposed heads and points. In all parts where the rivets are not closed by hydraulic riveting machinery he is to see that the rivet holes are countersunk and that coned rivets are used. All holes in the plates, angles, &c., are to be drilled, and not punched, and are to be drilled in place after bending. The clearance between rivet hole and rivet before closing is not to be greater than approved by the overseer.

The overseer will see that the particulars of the form, dimensions, and pitch of the various stays shown on the drawings are adhered to, and samples of them are to be tested as directed in this specification; and he will be guided by his experience as a workman in testing and judging of the soundness of the forging and construction of the various stays.

He is to see that palm stays, if fitted, are forged from the solid and not welded, that all short stays are nutted on all flat surfaces except where otherwise approved and screwed to a pitch of twelve threads per inch for stays of 1 inch diameter and above, that the holes for the screwed stays in the water spaces are drilled and tapped together after the furnaces and combustion chambers have been riveted in place in the boiler, that the combustion chamber stays are drilled square to the bevel of the combustion chamber plates, and that no bevel washers are inside the chamber. Any girder stays used for combustion chambers are to be well bedded on to the tube plates to the satisfaction of the overseer.

The overseer is to see that the arrangement of the zinc plates shown on the approved drawings is adhered to, that the metallic surfaces in contact are filed bright, and that means are adopted to secure a firm grip of the clips by which the plates are attached.

The overseer is to witness the testing, in all cases, of the boiler tubes, in accordance with this specification, before they are put in the boiler.

When the boilers are reported to the overseer by the contractors as being completed, ready for testing by water pressure, the overseer is to witness a preliminary test of them in accordance with the specification, carefully observing with the assistance of gauges, and straight edges whether any bulging or deflection of the plates has taken place.

The official test will be conducted on all occasions in the presence of an inspecting officer. A test pressure gauge is supplied to the overseer from the Admiralty, and the official test is to be made with this gauge.

After the boilers have been tested by water pressure the overseer is to see that they are properly cleaned inside and outside, and then well painted with red lead. It is important that the whole surface of the boilers should be thoroughly cleansed of scale formed in manufac-

ture before any paint is put on them. The boilers are not to be exposed to the weather till they are so painted, and properly cleaned and closed up to his satisfaction.

The overseer is to make himself fully acquainted with the progress of the whole of the work in its various stages, to satisfy himself that every part is sound before it is allowed to be put in the boilers, and to see that the following instructions for the treatment of mild steel are strictly complied with.

Quality of and Tests for Materials.

(*a.*) *Steel generally.*

Quality of.

All steel used throughout the whole of the work is to be of quality to be approved by the Admiralty. The names of the firms from whom it is proposed to obtain this material are to be submitted for approval before the order is placed. The quality and makers' names of all steel are to be marked on all drawings sent to the Admiralty.

Solid ingots for forgings.

All steel forgings are to be made from solid ingots, and test pieces from each important completed forging will be subject to the tests for steel enumerated below, and facilities are to be afforded, by a proper system of numbering and registering the ingots, to enable the origin of any forging to be ascertained.

Testing in presence of Admiralty officers, &c.

The whole of the temper and bending tests for furnace and other plates exposed to flame, also those for the important castings and forgings, and not less than 10 per cent. of all the other tests enumerated, are to be made in the presence and to the satisfaction of the Admiralty officers. These tests are intended to facilitate supply, but are not to preclude examination at the machinery contractors' works, and rejection of any plates or castings found defective after delivery. The tensile strength and elongation per cent. are to be stamped on each plate.

Copies of invoices to be supplied, &c.

Copies of the invoices upon which the plates, bars, angles, rivets, stays, tubes, &c., for the boilers have been received, with the names of the manufacturers of the material and their tests, are to be supplied to the boiler overseer for his use in accepting them. When any orders are placed with steel makers, copies of the orders showing the particular purpose of the materials should be sent to the Admiralty overseer, with a copy of the specified tests.

(*b.*) *Plate, Angle, and Bar Steel, for Boilers and any Steel Steam Pipes.*

Tests for steel plates, &c.
Tensile test.

Every plate, &c., used is to be tested as follows:—Strips cut lengthwise or crosswise are to have an ultimate tensile strength per square inch of section as follows:—(1) plates, &c., not exposed to flame, not less than 27 tons,

and not exceeding 30 tons; (2) lower front plates not less than 25 tons, and not exceeding 28 tons; (3) furnace plates not exceeding 25 tons, and not less than 23 tons; (4) fire-box and other plates exposed to flame not exceeding 26 tons, and not less than 24 tons. The elongation taken on a length of 8 inches, must be at least 20 per cent. for strips from shell and other plates which are not exposed to flame and which will not be flanged, and at least 25 per cent. for plates which are not exposed to flame and which will be flanged, at least 27 per cent. for strips from the furnaces, and at least 26 per cent. for strips from fire-box and other plates exposed to flame. Edge shearings, to bring plates to proper dimensions, are to be equal on opposite sides.

Temper tests.

Strips cut lengthwise or crosswise, $1\frac{1}{2}$ inches wide, heated uniformly to a low cherry red, and cooled in water of 82° Fahrenheit, must stand bending double in a press to a curve of which the inner radius is one and a-half times the thickness of the steel tested.

Welding and forging tests of plates exposed to flame.

The plates for furnaces and other parts exposed to flame are, in addition, to be tested by welding and forging, and some of the welded pieces are to be broken in the testing machine to ascertain the efficiency of the welding.

Test pieces.

The pieces cut out for testing are all to be cut in a planing machine, to have the sharp edges removed, and are to be of parallel width for at least 8 inches of length.

Forged tests of angle, &c., steel.

The angle, tee, and bar steel are to stand such other forge tests, both hot and cold, as may be sufficient, in the opinion of the overseer, to prove the soundness of the material and fitness for the service intended.

Hammering test.

The furnaces are to be subjected to a hammering test if required before the machinery is accepted. The test is to be carried out in accordance with Admiralty practice.

(*c.*) *Steel Rivets for Boilers.*

Manufacture.

The whole of the rivets are to be properly heated in making, and care is to be taken that the finished rivets cool gradually.

Tensile test.

The rivets are to be made from steel bars, the ultimate tensile strength of which should not be less than 25 tons, and should not exceed 27 tons per square inch, with a minimum elongation of 25 per cent. in a length of 8 inches.

Temper tests.

Pieces cut from the bars, heated uniformly to a low cherry red, and cooled in water of 82° Fahrenheit, must stand bending double in a press to a curve of which the inner diameter is equal to the diameter of the bar tested.

Forge tests.

Samples from each batch of rivets are to be selected and are to stand the following forge tests satisfactorily without fracture:—The rivet to be bent double, cold, to a curve

of which the inner diameter is equal to the diameter of the rivet tested; the rivet to be bent double when hot, and hammered till the two parts of the shank touch; the head to be flattened when hot, without cracking at the edges, till its diameter is two and a-half times the diameter of the shank. Finally, the shank of a rivet is to be nicked on one side, and bent over to show the quality of the metal.

(*d.*) *Boiler Tubes.*

Boiler tubes.

The tubes are to be made from acid or basic "open hearth" steel. Strips cut from the tubes must have a tensile strength not exceeding 25 tons and not less than 21 tons per square inch, with an extension of at least 25 per cent. in a length of 8 inches. Strips cut from the tubes flattened, heated to a blood heat and plunged into water 82° Fah. temperature, should be capable of being doubled over a radius of $\frac{1}{2}$ inch without fracture. Pieces 2 inches long, cut from the ends of tubes under $\frac{3}{16}$ inch thick are to be capable, when cold, of being hammered down endwise until their length is reduced to $1\frac{1}{4}$ inch, and of being flattened until the sides are close together in each case without fracture. The ends of the tubes under $\frac{3}{16}$ inch thick are to admit of being expanded cold by a roller expander, worked in a tube hole to an increase of diameter of 15 per cent., and hot by a solid drift to an increase of diameter of 20 per cent. Tubes $\frac{3}{16}$ inch and over in thickness are to admit of being expanded hot and cold to half the increases of diameter required for tubes under $\frac{3}{16}$ inch thick. The above tests are to be applied to 2 per cent. of the tubes, to be selected by the examining officers. The failure of the tubes selected to stand the specified tests in a satisfactory manner may render the whole of any delivery liable to rejection.

(*e.*) *Steel Castings for Machinery.*

Steel castings. Tests.

Steel castings for the machinery are to satisfy the following conditions:—Tensile strength, not less than 28 tons per square inch, with an extension in 2 inches of length of at least 23 per cent. Bars of the same metal, 1 inch square, should be capable of bending cold, without fracture, over a radius not greater than $1\frac{5}{8}$ inches, through an angle depending on the ultimate tensile strength, this angle to be not less than 90° at 28 tons ultimate strength, and not less than 60° at 35 tons ultimate strength, and in proportion for strengths between these limits. For intricate thin castings the extension in 2 inches of length is to be at least 10 per cent., and the bending angle is to be not less than 20° at 28 tons ultimate strength, and 15° at 35 tons ultimate strength, and in proportion for strengths between these limits. Test pieces

are to be taken from each casting. All steel castings are also to satisfactorily stand a falling test, the articles being dropped from a height of 12 feet (or as may be approved) on a hard macadamised road or a floor of equivalent hardness.

It is to be distinctly understood that contractions or defects in steel castings are not to be made good by patching, burning, or by electric welding, without the sanction of the Admiralty overseers.

(*f.*) *Steel Forgings for Machinery.*

Steel forgings.

All steel forgings are to satisfy the following conditions:—Ultimate tensile strength, not less than 28 tons per square inch, with an extension in 2 inches of length of at least 30 per cent. Bars of the same metal, 1 inch square, should be capable of being bent cold, without fracture, through an angle of 180° over a radius not greater than $\frac{1}{4}$ inch. Test pieces are to be taken from each forging. Crank and propeller shafts are to have test pieces taken from each end, and the ultimate tensile strength of the material of these shafts must not exceed 32 tons per square inch.

For all important forgings, such as crank and propeller shafts, connecting and piston rods, the forgings are to be gradually and uniformly forged from solid ingots, from which at least 30 per cent. of the top end of the ingot has been removed before forging, and at least 3 per cent. of the total weight of the ingot from the bottom end after forging. The sectional area of the body of the finished forging is to be not more than $\frac{1}{6}$ the original sectional area of the ingot.

(*g.*) *Cast Iron.*

Cast iron.

Test pieces to be taken from such castings as may be considered necessary by the inspecting officer. The minimum tensile strength to be 9 tons per square inch, taken on a length of not less than 2 inches. The transverse breaking load for a bar 1 inch square, loaded at the middle between supports 1 foot apart, is not to be less than 2,000 lbs.

(*h.*) *Gun-metal, Naval Brass, and White Metal.*

Composition, analysis, and tests of gun-metal and naval brass, &c.

The gun-metal used for all castings throughout the whole of the work supplied by the contractors is, unless otherwise specified, to contain not less than 8 per cent. of tin, and not more than 5 per cent. of zinc, the remainder to be of approved quality copper. The exact proportion of tin above 8 per cent. being arranged as may be required, depending on the use for which the gun-metal is intended. The ultimate tensile strength of gun-metal is to be not less than 14 tons per square inch, with an extension in 2 inches of

length of at least 7½ per cent. The composition of any naval brass used is to be :—Copper, 62 per cent.; zinc, 37 per cent.; and tin, 1 per cent. All naval brass bars are to be cleaned and straightened. They are to be capable of (1) being hammered hot to a fine point, (2) being bent cold through an angle of 75° over a radius equal to the diameter or thickness of the bars. The ultimate tensile strength of naval brass bars ¾-inch diameter and under is not to be less than 26 tons per square inch, and for round bars above ¾-inch diameter, and square bars not less than 22 tons per square inch, whether turned down in the middle or not. The extension in 2 or 4 inches of length is to be at least 10 per cent. Breaks within less than ½-inch of the grip are not to count. Cuttings from the propellers and other important gun-metal castings and naval brass work will be sent to Portsmouth dockyard for analysis. The white metal used for bearing surfaces is to contain at least 85 per cent. of tin, not less than 8 per cent. of antimony, and about 5 per cent. of copper; zinc or lead should not be used. The brasses are to be carefully tinned before filling with white metal.

Castings and forgings.

The gun-metal castings are to be perfectly sound, clean, and free from blow-holes. The steel castings are required to be clean, sound, and to be out of twist, and as free as possible from blow-holes; the steel forgings are required to be quite sound, clean, and free from all flaws. All castings and forgings must admit of being machined, planed, and bored to the required dimensions; and no piecing, patching, bushing, stopping, or lining, will be permitted, nor will any manufactures in which these conditions have been infringed be accepted. In cases of doubt as to the suitability of castings or other materials, for the purpose intended, early reference should be made to the inspecting officer to avoid subsequent delay by the rejection of such parts after delivery. The whole of the steel plates, angles, and rivets used in the construction of any part of the work supplied is to be manufactured by the Siemens-Martin process. All castings are to be of steel or gun-metal, except where otherwise specified; and all forgings, plates, bolts, &c., are to be of steel. No steel is to be toughened without sanction from the Admiralty.

Copper for Pipes.

Copper.

Strips cut from the steam and other pipes, either longitudinally or transversely, are to have an ultimate tensile strength of not less than 13 tons per square inch when annealed in water, with an elongation in length of 2 inches or 4 inches of not less than 35 and 30 per cent. respectively. Such strips are also to stand bending through 180° cold until the two sides meet, and of hammering to a fine edge without cracking.

Treatment of Mild Steel.

Hammer scale to be removed.

All plates and furnaces for boilers and steam pipes are to be treated as follows, with a view of removing the black oxide or scale formed during manufacture:—The plates and furnaces, previous to their being taken in hand for working, are to stand for not less than 8 hours in a liquid consisting of 19 parts of water and one of hydrochloric acid. The plates should be placed in the bath on edge, and not laid flat. When the plates and furnaces are removed from the dilute acid both the surfaces are to be well brushed and washed to remove any scale which may still adhere to them. They should then be placed in another similar bath filled and kept well supplied with fresh water, or be thoroughly washed with a hose, as may be found necessary. The plates on removal from the fresh water should be placed on edge to dry. This treatment is to be carried out on the premises where the boilers and pipes are made.

Cold bending.

All plates or bars which can be bent *cold* are to be so treated; and if the whole length cannot be bent cold, heating is to be had recourse to over as little length as possible.

Hydraulic flanging.

The front and end plates of the boilers, and also all other plates, including those for the combustion chambers, *are to be flanged by hydraulic pressure*, and in as few heats as possible.

Dangerous temperature to be avoided.

In cases where plates or bars have to be heated, the greatest care should be taken to prevent any work being done upon the material after it has fallen to the dangerous limit of temperature known as a "blue heat"—say from 600° to 400° Fahrenheit. Should this limit be reached during working, the plates or bars should be reheated.

Annealing.

Plates or bars which have been worked while hot are to be subsequently annealed simultaneously over the whole of each plate or bar.

Failure of metal.

In cases where any bar or plate shows signs of failure or fracture in working it is to be rejected. Any doubtful cases are to be referred to the Admiralty.

APPENDIX I.

Rules of the British Corporation, for the Survey and Registry of Shipping (Steel Boilers).

(1) The rules following are intended to apply to the construction of steel boilers; where boilers are to be made of iron, they will be specially considered by the committee.

(2) **Boiler Steel.**—The quality of steel to be used in the construction of boilers must be as follows, viz. :—

Plates intended for the cylindrical shells and butt straps, and bars intended for stays, are to have an ultimate tensile strength of not less than 27 tons, or more than 32 tons per square inch, with at least 20 per cent. extension in 8 inches of prepared section.

Plates which have to be flanged or welded, and bars intended for rivets, are to be from 25 to 30 tons per square inch in tensile strength, with not less than 20 per cent. extension in 8 inches, and plates for furnaces may be in tensile strength from 25 to 29 tons per square inch, with not less than 20 per cent. extension in 8 inches.

(3) Sample pieces for tensile and bending tests must be prepared as follows, viz. :—One each for every boiler plate, one each for every ten bars rolled of angle or stay bars, one bending test for every five bars rolled of rivet steel, and tensile tests for rivet steel as follows, viz. :—One to every twenty bars rolled, for bars 1 inch diameter and under; one to every twelve, for bars from 1 inch to $1\frac{1}{2}$ inches diameter, and one to every eight for bars over $1\frac{1}{2}$ inches diameter.

(4) The sample pieces for bending are to be heated uniformly to a dull red, then cooled in water of about 82° Fahrenheit, and afterwards bent double without fracture to a curve, the inner radius of which does not exceed one and a-half times the thickness of the piece.

(5) When, in the judgment of the surveyor, the stay bars are of so large a diameter as to cause difficulty in bending, the temper-bending test may be carried out on one-half of the broken tensile piece. Steel stay bars which have been worked in the fire must be subsequently annealed.

(6) In addition to the tests for rivet steel, specified above, the manufactured rivets are to be tested, hot and cold, by bending, crushing under the steam hammer, or in such other way as may be required, a sufficient number of sample rivets being taken indiscriminately for the purpose. The rivets are not to be used until such testing has been carried out to the satisfaction of the surveyors.

(7) All plates that have been welded, or locally heated for furnace work, and plates in which the rivet holes are punched instead of being drilled, must be annealed after this work is carried out. Any plate which, upon being tested, shows a higher tensile strength than the specified limit, and is, therefore, liable to rejection, may, at the option of the manufacturer, be annealed and re-tested. Such annealing should not take place after the plate is sheared, unless both plate and test piece are placed under exactly similar conditions for annealing. In the event of this second test proving unsatisfactory, the plate must be rejected.

(8) The stamping of the material, rejection for defects, and the issuing of advice notes must be carried out in the same way as for ship steel.

(9) **Strength Calculations.**—The sizes and arrangement of the different parts for a given working pressure; or the working pressure suitable to a given size and arrangement of material may be found from the following formulæ and rules :—

(10) **Cylindrical Shells**—

$$\frac{C \times (T - 1) \times E}{D} = W.$$

Where C = 18·75 when the longitudinal seams are fitted with double butt straps of equal width.
C = 18·125 when the double butt straps are of unequal width —*i.e.*, one strap not covering the outer row of rivets.
C = 17·5 when the longitudinal seams are lap joints.
T = thickness of plate, in sixteenths of an inch.
E = the least percentage of strength of longitudinal joints, found as follows :—

$$\text{For the plate at the joint } E = \frac{p - d}{p} \times 100.$$

$$\text{For the rivets at the joint } E = \frac{n \times a}{p \times t} \times 85.$$

Where p = pitch of rivets, in inches.
d = diameter of rivet holes, in inches.
n = number of rivets used per pitch.
a = sectional area of rivets, in square inches.
t = thickness of plate, in inches.

Where rivets are in double shear, $1{\cdot}75a$ is to be used instead of a.

D = mean diameter of shell, in inches.
W = working pressure in lbs. per square inch.

The inside butt strap to be at least three-quarters the thickness of the plate.

Note.—The constant (C) is to be used with steel of the minimum strength of 27 tons per square inch required by par. 2; when a higher minimum strength is guaranteed, the constant may be proportionately increased.

(11) **Flat Surfaces, supported by Stays—**

$$\frac{C \times (T - 1)^2}{S} = W.$$

Where C = 125 for plates fitted with screwed stays having riveted heads.
C = 165 for plates fitted with screwed stays and nuts.
C = 200 for plates fitted with stays and double nuts.
C = 218 for plates with stays, double nuts, and washers outside. The washers to be at least half the thickness of the plate, and in diameter equal to one-third the pitch of stays.
C = 238 for plates fitted with stays, double nuts, and washers outside riveted to the plate. The washers to be at least half the thickness of the plate, and in diameter equal to two-fifths the pitch of the stays.
C = 260 for plates fitted with stays, double nuts, and washers outside riveted to the plate. The washers to be the same thickness as the plate, and in diameter equal to two-thirds the pitch of the stays.
C = 284 for plates fitted with stays, double nuts, and doubling strips outside, riveted to the plates. The strips to be the same thickness as the plate, and in width equal to two-thirds the pitch of the stays.
T = thickness of plate, in sixteenths of an inch.
S = surface in square inches, supported by one stay.
W = working pressure, in lbs. per square inch.

Flat plates, having doublings, at least two-thirds of their thickness, riveted to them.

$$\frac{C \times (T + \frac{t}{2} - 1)}{S} = W.$$

Where t = thickness of doubling plates, in sixteenths of an inch.
C, T, S, and W, as before.

Note.—For front plates in the steam space, which are not protected against the direct action of the flame, the constants given above are to be reduced 20 per cent.

(12) **Tube Plates**—

$$\frac{160 \times (T - 1)^2}{P^2} = W.$$

Where T and W are as before.
P = mean pitch of stay tubes from centre to centre, in inches.

When girders are fitted to the tops of combustion chambers, the thickness of the tube plates must be found from the formula—

$$\frac{W \times L \times P}{(P - d) \times 1{,}600} = T.$$

Where W = working pressure, in lbs. per square inch.
L = width of combustion chamber over the plates, in inches.
P = horizontal pitch of tubes, in inches.
d = inside diameter of plain tube, in inches.
T = thickness of tube plate, in sixteenths of an inch.

(13) **Stays supporting Flat Surfaces**—

$$\sqrt{\frac{S \times W}{8{,}000}} + \tfrac{1}{8} = D.$$

Where S = surface, in square inches, supported by the stay.
W = working pressure, in lbs. per square inch.
D = Effective diameter of stay, in inches.

(14) **Circular Furnaces.** — Thickness of plain furnaces to resist collapsing—

$$\frac{420 \times (T - 1)^2}{L \times D} = W.$$

Where T = thickness of plate, in sixteenths of an inch.
L = length of furnace in feet, or length between stiffening rings, if fitted.
D = outside diameter of furnace, in inches.
W = Working pressure, in lbs. per square inch.

The thickness, however, must not be less than that given by the following formula—

$$\frac{C \times (T - 2)}{D} = W.$$

Where C = 655 for plain furnaces.
C = 810 for furnaces fitted with one Adamson ring, pitched not more than 42 inches apart.
C = 905 for furnaces fitted with two Adamson rings, pitched not more than 28 inches apart.

C = 1,050 for furnaces fitted with a series of Adamson rings, pitched not more than 23 inches apart.
C = 1,160 for furnaces fitted with a series of Adamson rings, pitched not more than 20 inches apart; or for corrugated, ribbed, and suspension furnaces (Fox, Purves, and Morison).
C = 950 for Farnley spiral furnace and Holmes' furnace.

(15) Girders for Combustion Chamber Tops—

$$\frac{14{,}500 \times d^2 \times T}{D \times L^2} \times \frac{(n+1)^2}{n(n+2)} = W \text{ when } n = 2, 4, \text{ or } 6.$$

$$\frac{14{,}500 \times d^2 \times T}{D \times L^2} \quad . \quad . \quad . \quad . \quad = W \text{ when } n = 1, 3, \text{ or } 5.$$

Where d = depth of girder at the centre, in inches.
T = thickness of girder, in inches.
D = distance from centre to centre of girders, in inches.
L = length from tube plate to tube plate, or from tube plate to back of combustion chamber, in inches.
n = number of stays fitted with each girder.

General Construction.

(1) Each boiler must have at least one glass water gauge, three test cocks, and one steam pressure gauge. Double-ended boilers are to have these fittings at each end.

(2) A stop-valve is to be fitted to each boiler, so that any one of a series of boilers may be worked independently if required. The neck of the stop-valve to be as short as possible.

(3) Two safety-valves will be required for each main boiler, and they must be tested under steam to the satisfaction of the surveyors, and set to a pressure not more than 3 per cent. in excess of the intended working pressure. The combined area of the valves is to be sufficient to prevent the steam accumulating to more than 10 per cent. of the working pressure during fifteen minutes full firing. If the boilers be supplied with forced draught, the valve area must be increased so that the same conditions may be met.

(4) Easing gear is to be provided, and so arranged that the safety-valves on any one boiler may be lifted simultaneously, without interfering with those on any other boiler.

(5) Surface and bottom blow-off cocks should be fitted to the boiler, in addition to the cock on the hull of the vessel, and all cocks must have spigots extending through the hull plating, with a plate flange round same on the outside.

(6) Upon completion, the boilers are to be tested by hydraulic pressure to twice the intended working pressure, and after being placed in position in the vessel, they must be efficiently secured by brackets and stays to prevent any fore and aft, or athwartship movement.

(7) Donkey boilers need not have more than one safety-valve, provided the valve area be not less than $\frac{1}{2}$ square inch for each foot of grate surface. In other respects the requirements for donkey boilers are the same as for main boilers.

APPENDIX K.

Bureau Veritas, Rules for Boiler Shells, Working Pressure, or Thickness of Plates, and for Sizes of Stays.*

Circular Shells and Steam-holders with Internal Pressure.

A riveted joint may fail through the tearing of the plate or butt-strap between the rivets, the shearing of all the rivets, or by a combination of the two. The following formulæ apply to these several cases. The plate thickness and the diameter of rivets to be applied to have the highest values which each formula would give separately.

I. *Rupture through Plate.*

The formulæ for working pressure and plate thickness are in this case :—

$$\left.\begin{aligned} P &= \frac{2\,a\,R\,(t - 0{\cdot}04)}{D} \\ \text{and} \quad t &= \frac{P\,D}{2\,a\,R} + 0{\cdot}04 \text{ inch} \end{aligned}\right\} \quad \ldots\ldots \quad (I.)$$

Where P = allowed working pressure, above atmosphere, in pounds per square inch.

D = greatest inside diameter of boiler shell, or steam-holder, in inches.

t = thickness of shell plates in inches. $t - 0{\cdot}04$ inch represents the thickness left after a reduction of 0·04 inch through corrosion.

*N.B.—If a boiler is intended for a vessel belonging to a country where the law prescribes heavier scantlings than those required by the following paragraphs, the builders have, of course, to comply with the legal requirements.

R = the tensile stress, in pounds per square inch, which will be allowed in the plate. The value of R will be the breaking strength divided by 4·4, the latter figure representing the factor of safety for the plate after it has been corroded away by 0·04 inch.

If the actual breaking strength happens to be known by tests carried out to the Administration's satisfaction, it may be applied for finding R; but when, as usual, it is not known, the value of R will be :—

For Steel: the 4·4th part of the lower limit of tensile strength chosen by the designer, which in such case is to be stated when a boiler design is submitted for approval.

For Iron: 10,700 lbs. per square inch, corresponding with a tensile strength of 21 tons. A table annexed shows the values of 2 R for various tensile strengths.

a = ratio of the resistance of the plate left between the holes, to that of the full plates. It will be determined from the following expression :—

$$a = \frac{p - d}{p}.$$

Where p = pitch of rivets in outer row, in inches.
d = diameter of rivet holes, in inches, either the real diameter or a corrected one, according to the following clauses :—

1. When the rivet holes are drilled, or when, having been punched, they are afterwards drilled or rimered out so that the injured metal around is completely removed, the real diameter may be taken.
2. When the holes are simply punched they will be considered as being ¼ inch larger in diameter than as punched.

Table showing the Values of 2 R.

In formulæ (I.) *and* (IV.) *for various tensile strengths of the material.*

Tensile strength of Plates in tons per sq. inch.	Value of 2 R.	Tensile strength of Plates in tons per sq. inch.	Value of 2 R.
29	29,500	24	24,400
28	28,500	23½	23,900
27	27,500	23	23,400
26½	27,000	22½	22,900
26	26,500	22	22,400
25½	26,000	21½	21,900
25	25,500	21	21,400
24½	25,000	20½	20,900

II. *Rupture through Rivets.*

In this case the following are the formulæ for finding the allowed working pressure, or required rivet section :—

$$P = \frac{2\,A\,s}{D\,l}$$

and

$$A = \frac{P\,D\,l}{2\,s} \qquad \ldots\ldots\ldots (II.)$$

Where P and D have the same meaning as before, and

l = the length, in inches, of the identical parts into which a riveted joint can be subdivided. In most cases l is the pitch of the rivets in the outer rows (figs. 145 and 146). In general it depends upon the system of joint adopted.

s = the maximum shearing stress, in pounds per square inch, which will be allowed on the rivets. It will be the 4·4th part of the actual shearing resistance of the material, if known, from tests. If the actual shearing resistance of the rivet bars is not known, it will be assumed to amount to 0·8 of their tensile strength, and the value of s will be :

For Steel.—5·5th part of the lower tensile limit adopted by the designer.

For Iron.—8,600 lbs. per square inch, corresponding with a tensile strength of about 21 tons per square inch.

A = the total shearing surface, in square inches, of the rivets (that is, twice the area of the rivet hole when a rivet is in double shear), with or without corrections, according to the following rules :—

1. The total area of the rivet hole, without any reduction, may be brought into account when the rivet holes are drilled in place after the plates are bent, and the longitudinal and circumferential seams at least double riveted, the former by machine.

This clause also applies to the case where the holes having been punched, are afterwards drilled out in place, so as to correspond perfectly with each other.

2. $\frac{15}{16}$ of the full area are to be taken when the joint is made, as in the preceding case, with the exception that the riveting is done by hand.

3. $\frac{7}{8}$ of the full area are to be applied when the rivet holes are punched after the plates are bent, and the longitudinal seams at least double riveted.

III.—*Combined Rupture through Plate and Rivets.*

This case is only to be examined when the outer row has a wider pitch than the inner ones.

The formula to be applied in this case is :—

$$P = \frac{2(B \times R + C \times S)}{D \times l} \qquad \ldots\ldots (III.)$$

Where P R S D and l have the same meaning as before.

B = the sectional area, in square inches, of the plate on the portion l of the joint along the line of its supposed rupture, assuming that in case the plate is liable to corrosion, its thickness has been reduced by 0·04 inch. The area of the plate is to be corrected as per Case I., No. 2, when the rivet holes are simply punched.

C = the total area of the rivets which are supposed to shear on the length l, corrected, if required, in the same way as prescribed in Case II., Nos. 2 and 3.

For a rivet in double shear the resistance will be considered as being twice that of one in single shear.

Fig. 145.

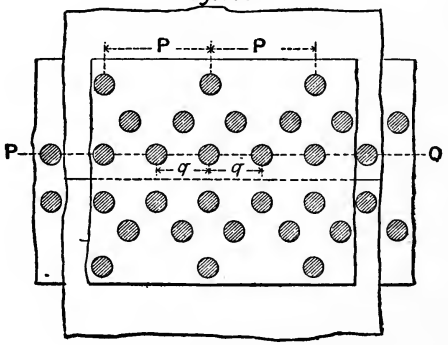

Fig. 146

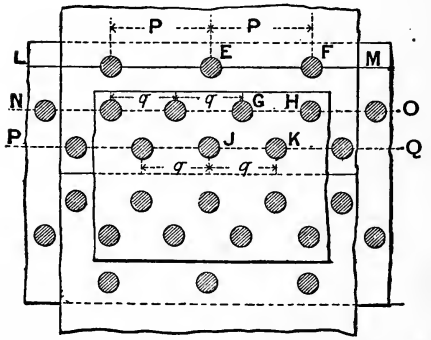

IV.—*Rupture through Butt Straps.*

Rupture may take place along one of the inner rows of rivets (see P Q, figs. 145 and 146). The formulæ for this case, based on the

same principle as (I.), are :—

$$\left.\begin{aligned} P &= \frac{2\,a\,R\,(t - 0{\cdot}04)}{D} \\ \text{and} \qquad t &= \frac{P \times D}{2\,a\,R} + 0{\cdot}04 \text{ inch} \end{aligned}\right\} \quad \ldots \quad \text{(IV.)}$$

Where P D and R have the same meaning as before.

t = thickness, in inches, of butt strap, or sum of thicknesses, if there are two straps. (The thickness, of course, not to be less than required for caulking).

$$a = \frac{q - d}{q}.$$

Where q = pitch of rivets in the inner row, in inches.

d = diameter in inches of the rivet holes in the inner row; increased by $\frac{1}{4}$ of an inch, if the holes are simply punched.

V.—*Combined Rupture through Butt Straps and Rivets.*

Formula (III.) applies to this case, B being the section of the butt strap, or straps, along which rupture would take place.

Corrections as for Case III., Nos. 2 and 3.

Remarks.—In zig-zag riveting, the distance between the rows is to be such that no rupture through plate or butt strap is to be feared along the zig-zag line.

When stays are bolted through the shell, they should be so arranged that they do not weaken the shell plates more than the riveted joints. If the resistance at the stay bolts is the smaller of the two, the plate's thickness shall be determined by it. It will be found from a formula the same as (I.), p and d applying to the stay bolts.

For circumferential seams, double riveting will be required if the thickness of the plates exceeds $\frac{1}{2}$ inch.

In double-ended boilers with six furnaces, treble riveting will be required for the circumferential seams connecting the courses with each other ; it is not required for the end seams.

In double-ended boilers with four furnaces the same arrangement is recommended.

Example showing the application of the above rules to the joint in fig. 146 (p. 558).

I. The value, $p - d$, is the clear distance between the rivet holes, E and F. If the holes are punched,

$$p - (\text{dia. hole E} + \tfrac{1}{4} \text{ inch}),$$

is to be considered as the equivalent length.

II. The length, l, is equal to p. The rivets, which would be sheared on this length, would be—

In single shear: one-half of rivet E, one-half of rivet F—total, one rivet E.

In double shear: one-half of rivets H and J, the whole of G and K—total, three rivets; each counting double. Consequently,

A = area of one hole, E + 6 × area of one hole, G. A is to be multiplied by $\frac{15}{16}$ or $\frac{7}{8}$, in accordance with Case II., 2 and 3, if the conditions mentioned therein take place.

III. Rupture of plate along the line N O, and shearing of the rivets in the outer row.

No corrosion is likely to take place in the interior of the joint.

Consequently, in formula (III.)—

B = $(p - 1\frac{1}{2}$ × dia. of rivet hole, G) × thickness of plate; the dia. of the rivet hole, G, increased by $\frac{1}{4}$ inch if the holes are punched.

The shearing surface of the rivets is one-half of E and one-half of F, therefore,

C = area of one rivet hole, E, to be multiplied by $\frac{15}{16}$ or $\frac{7}{8}$, if required, according to clauses Nos. 2 and 3 (Case II.).

IV. Rupture of butt straps through P Q.

The area which resists rupture is, on the length, q: (q – dia. of hole, J) × sum of thickness of straps, the diameter of J to be increased by $\frac{1}{4}$ inch, if the holes are simply punched.

V. Rupture of butt strap through L M.

In this case the rivets in the rows, N O and P Q, must shear (double shear), and we have in formula (IV.)—

B = (p – dia. of hole, E) × thickness of wide strap.
The dia., E, being increased by $\frac{1}{4}$ inch, if the holes are simply punched.

C = 3 × area of hole, G + 3 × area of hole, K.
Which value has to be multiplied by $\frac{7}{8}$ or $\frac{15}{16}$, if the Case II., Nos. 2 and 3, occur.

Shells of Superheaters.—The same mode of determining the working pressure or the thickness of shell plates will be followed for circular cylindrical superheaters, and the same formulæ may be used, but with the following alterations:—

1. When the plates are exposed to the direct action of the products of combustion, the values of R and S, as given for Cases I. and II., will have to be multiplied by 0·8 and the addition to the thickness of plates, on account of corrosion, will be increased from 0·04 to $\frac{3}{16}$ of an inch, to compensate for the corrosive action of the gases.

Formulæ (I.) become, therefore—

$$P = \frac{1{\cdot}6\ a\ R\ (t - \frac{3}{16})}{D},$$

and

$$t = \frac{P\ D}{1{\cdot}6\ a\ R} + \tfrac{3}{16} \text{ inch.}$$

2. When the plates are protected from the direct action of the products of combustion, R and S will be multiplied by 0·9, and the additional thickness for burning away will be $\frac{1}{8}$ inch.

Formulæ (I.) become in this case—

$$P = \frac{1{\cdot}8\ a\ R\ (t - \frac{1}{8})}{D},$$

and

$$t = \frac{P\ D}{1{\cdot}8\ a\ R} + \tfrac{1}{8} \text{ inch.}$$

Flat Plates.

The allowed working pressure or the thickness of flat plates is to be determined by the following formulæ :—

$$P = \frac{(t - 1)^2}{a^2 + b^2} \times \frac{T}{C},$$

and

$$t = 1 + \sqrt{(a^2 + b^2)\frac{P\ C}{T}}.$$

Where P = allowed working pressure above atmosphere, in lbs. per square inch.

t = thickness of plate in sixteenths of an inch.

a = pitch of stays, in inches, in one row.

b = distance, in inches, between two rows of stays.

In case of irregular staying, such as in the annexed sketch (fig. 147),

$\frac{1}{2}\ (p\ 1 + p\ 2)$,

shall be taken instead of $\sqrt{a^2 + b^2}$.

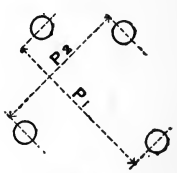

Fig. 147.

T = tensile strength of the material in tons per sq. inch of the original section.

It is to be determined in the same way as for shell plates, that is :—

For steel it will be equal to the lower limit of the tensile stress, which is to be stated on the drawing.

For iron, 21 tons per square inch.

C = a constant, the value of which depends upon the mode of staying as follows :—

C = 0·084 when the stays are screwed into the plates and riveted over.

C = 0·065 when the stays are screwed into the plates and fitted with an outside nut.

C = 0·062 when the stays are fitted with inside and outside nuts and washers, provided the diameter of the outside washers be at least 0·4 of the pitch between the rows of stays. The thickness of the washer to be at least $\frac{2}{3}$ that of the plate, and to be increased if the diameter of the washer exceeds $1\frac{1}{2}$ times the diagonal width of the nut.

C = 0·055 when the stays are fitted with inside and outside nuts and washers, the outside washer being riveted to the plate and having $\frac{2}{4}$ of the plate's thickness and a diameter equal to 0·6 of the pitch between the rows of stays.

For the values of $\frac{T}{C}$, see Table below.

When the plates are in contact with steam on one side and flame or hot gases on the other, the thickness is to be increased.

For instance, when in return tube boilers, the top front plates are in no way protected from the hot gases, the working pressure or thickness will, in such a case, be determined by the formulæ.

$$P = \frac{(t - 2)^2}{a^2 + b^2} \times \frac{0{\cdot}9\ T}{C}$$

and

$$= 2 + \sqrt{(a^2 + b^2)\frac{P\ C}{0{\cdot}9\ T}}.$$

When the said front plates are protected by a flame plate, no increase of thickness will be required.

VALUES OF $\frac{T}{C}$ IN THE FORMULA FOR FLAT PLATES.

Tensile strength of plate in tons per square inch.	C = 0·084	C = 0·065	C = 0·062	C = 0·055
20	$\frac{T}{C}$ = 238·0	$\frac{T}{C}$ = 307·6	$\frac{T}{C}$ = 322·6	$\frac{T}{C}$ = 363·6
21	250·0	323·0	338·6	381·8
22	262·0	338·4	354·8	400·0
23	273·8	353·8	371·0	418·0
24	285·8	369·2	387·0	436·2
25	297·6	384·6	403·2	454·4
26	309·6	400·0	419·4	472·6
27	321·4	415·3	435·4	490·8
28	335·4	430·7	451·6	509·0
29	345·2	446·1	467·8	527·2
30	357·2	461·5	483·8	545·4

Stays.

The diameter of stays supporting flat surfaces is to be determined by the following formula :—

$$d = \tfrac{1}{8} \text{ inch} + \sqrt{\frac{Q}{300\ T}}.$$

Where d = effective diameter in inches (for instance, the diameter at bottom of thread in screw stays).

Q = total load on stay in lbs.

T = tensile strength of the material, in tons per square inch.

For steel this tensile strength will be the lower limit chosen by the boiler designer; for iron it will be taken at 22 tons. In both cases the actual strength may be applied if it is known from tests.

If the stays are not round, their cross section must be such that the stress per square inch, caused by the load Q, nowhere exceeds 5·75th part of the tensile strength, after deducting $\frac{1}{16}$ of an inch all round as an allowance for corrosion or wear.

In welded stays the stress as just described will be reduced by 20 per cent. Welding of steel stays is only allowed for very mild qualities.

For high working pressures, such as used in triple-expansion engines, it is recommended to screw all stays into the plates they support, in addition to fitting them with nuts.

This also applies to stay tubes, with the exception that it is recommended that nuts should not be fitted in combustion chambers.

Circular Furnaces.

Plain Cylindrical Furnaces.

The working pressure and the thickness of the plates may be calculated from the following formulæ :—

$$P = \frac{C\ t^2}{D\ L},$$

and

$$t = \sqrt{\frac{D\ P\ L}{C}}.$$

Where t = the required thickness of plates, in inches.

D = outside diameter of furnace, in inches.

P = working pressure in lbs. per square inch (above atmosphere).

L = length of furnace in feet; or if made or fitted with efficient rings, the length the rings.

C = 70,000 when the furnace is truly circular and the longitudinal seams are welded, butted, or lapped and bevelled, and double riveted in the last-named case.

C = 60,000 when the furnace is not truly circular, or when the longitudinal seams are simply lapped.

The above constants apply to iron plates of fair quality.

They may be multiplied by 1·2 when the plates are of mild steel, or of iron of the best quality with regard to behaviour under the action of the fire, having a uniform structure without blisters or other defects, and fulfilling the following conditions, to be ascertained by testing samples :—

	With the Grain.	Across the Grain.
Tensile strength, ...	23 tons per sq. in.	21½ tons per sq. in.
Elongation in 8 inches, . . .	16 per cent.	10 per cent.
Cold bending without fracture to an angle of	60°	35°
Hot ,, ,, ,,	180°	180°

The thickness should in no case be less than :—

$$t = \frac{P\,D}{8{,}000} \text{ for iron plates.}$$

$$t = \frac{P\,D}{9{,}000} \text{ for steel plates.}$$

Corrugated and Ribbed Furnaces.

The plate thickness is to be found by the following formulæ.

1. For corrugated furnaces :—

$$T = \frac{P\,D}{1{,}000} + 2.$$

Where P = working pressure in lbs. per square inch.
T = thickness of plate in sixteenths of an inch.
D = outside diameter in inches measured on the top of the corrugations.

The formula applies to corrugations 6 inches long and 1½ inch deep.

2. For ribbed furnaces, when manufactured to the satisfaction of the Administration :—

$$T = \frac{P\,D}{1{,}160} + 2.$$

Where P and T are as above.
D = outside diameter of plain parts between the ribs, in inches. The formula applies to ribs spaced 9 inches and projecting 1⅜ inch, the difference between the greatest and the smallest diameters in any part of the furnace not exceeding $\frac{3}{1000}$.

General as to Boiler Arrangements and Fittings.

When two or more boilers are fitted, they should be arranged to work separately or independently of each other, either by stop-valves between the boilers and the common superheater, or by stop-valves between the separate superheaters and the main steam pipes.

Each boiler must be fitted with a separate pressure gauge. Double-ended boilers to have a pressure gauge at each end.

Steam pipes of donkey engines must be independent of the main pipes, so as to keep the steam off the main engines when only winches or other auxiliary engines are working.

The bottom blow-off to be arranged with one cock directly attached to the shell of the boiler, and another directly attached to the skin of the vessel. The surface blow-off must be similarly arranged. The main stop-valve to be so situated and fitted that it can be worked from the starting platform or the stoke-hole floor.

To protect the plating the cocks on the ship's bottom should be fitted with spigots passing through the plating and through a flange on the outside. If this flange is of iron it must be galvanised.

Steam domes or superheaters, when placed in the uptake and exposed to the direct impact of the flame, will only be allowed as an exception, and must be efficiently protected by flame plates. In all cases it must be possible to examine efficiently the interior and the exterior of the domes or superheaters.

To prevent the boilers shifting in a transverse direction through the rolling of the vessel, or longitudinally in case of collision, they must be properly secured in their seats.

All manholes to be fitted with compensating rings.

At least two safety-valves of an approved design must be fitted to each main boiler.

Their total area must be such that with at least twenty minutes' hard firing the pressure does not rise more than 10 per cent. of the effective pressure for which the boiler has been approved.

When forced draught is provided for, the area is to be increased in proportion to the increased evaporative power of the boilers.

Suitable arrangements and gear to be fitted in connection with the safety-valves, whereby they may be lifted from the deck as well as from the stoke-hole floor.

If it be practicable to isolate a superheater communicating simultaneously with two or more boilers, it will be necessary to furnish it with a safety-valve of suitable dimensions.

APPENDIX L.

Rules of the German Government for the Mercantile Marine.

Hamburg.

Regulations respecting Steam Boilers.

1. *Plating of Boilers.*—When the smallest dimension of a cylindrical boiler exceeds 25 centimetres, or of a spherical-shaped boiler 30 centimetres, the portions of the boiler exposed to the flame, furnaces, and tubes shall *not* be made of cast iron.

Brass (copper) plates are only to be used for furnaces where their smallest dimension does not exceed 10 centimetres.

2. *Furnaces, Flues, and Combustion Chambers.*—Flues running round or through steam boilers must, at their highest point, be at least 10 centimetres below the minimum water level. This minimum level must, in lake and river vessels, be maintained when the vessel is inclined at an angle of 4°, and for sea-going ships at an angle of 8°. In boilers with a breadth of 1 to 2 metres, the distance to the water level must be at least 15 centimetres, and in boilers of greater breadth at least 25 centimetres.

These conditions do not apply to boilers in which the tubes are less than 10 centimetres diameter, nor to those wherein the portions of the plates in contact with steam are not liable to become red hot. The risk of plates becoming red hot may be assumed to be done away with if the heating surface exposed to the flame, before the flame reaches the point in question is, with natural draught 20 times, and with forced draught 40 times, greater than the area of the grate.

3. *Feed Valves.*—Each boiler must have a feed valve which will close by boiler pressure when the feed is off.

4. Each boiler must be fitted with its independent feed apparatus, each worked separately, and each to be capable, by itself, of keeping the boiler supplied. Several boilers connected together and used for the same purpose may, in this respect, be regarded as one boiler.

5. *Water Gauges.*—Each boiler must be fitted with a gauge glass, and also with a second means of ascertaining the height of the water. Each of these fittings must have a separate connection to the boiler, or if they have a common connection, the stand pipe must be at least 60 square centimetres in area (or 8·8 sq. in. = $3\frac{1}{2}$ dia.)

6. Water-test cocks to be fitted, the lowest one must be placed at the level of the regulation water line. All gauge cocks must be so fitted as to have a straight way through for cleaning them from scale or salt.

7. *Water Level.*—The regulation lowest water level is to be distinctly marked on the gauge glass, and also in a prominent place on

the boiler shell. The level of the flue, at its highest point, is also to be plainly and permanently marked on the shell of the boiler in way of the ship's beam.

Two water-gauge glasses are to be fitted on the boiler at the standard level of the water when the vessel is inclined as above, one on each side of the boiler, as far apart as possible, and symmetrically placed right and left of centre line of boiler.

When these two gauge glasses are fitted, the additional means named in Rule 5, for ascertaining the water level, may be dispensed with.

8. *Safety-Valves.*—Each boiler must be fitted with, at the least, one reliable safety-valve.

When several boilers have a common steam chest, from which they cannot be separately disconnected, two safety-valves will be sufficient.

Boilers of steamships, locomotives, and portable engines must have at least two safety-valves.

In steamships, except those that are sea-going, one valve is to be placed in such a position that the load on it can easily be ascertained from the deck.

The valves must be so arranged that they can be readily lifted at any time. They are to be loaded so that they will blow off immediately the working pressure is reached.

9. *Pressure Gauge.*—Each boiler must have a reliable pressure gauge, on which the highest regulation working pressure is to be plainly marked.

Boilers of steamships must have two pressure gauges—one clearly visible to the firemen, the other, except when the vessel is sea-going, in a convenient position for being observed from the deck. If a vessel has several boilers connected to a common steam chest, one pressure gauge on deck will be sufficient, in addition to the one on each boiler.

10. *Marking on Boiler.*—(1) Each boiler must have the highest working pressure, the maker's name, the ship number of the boiler, and the date of completion plainly and permanently stamped on it. Steamships, moreover, must also have the standard lowest water level marked on.

(2) Boilers that have already been constructed, at the date of these regulations, are not required to be altered to comply with them.

(3) The regulations for boilers of steamships apply in all cases in which boilers are permanently fixed in, or connected with the vessel.

10*a*. These particulars must be stamped on a metal plate, which is to be fixed on the boiler by copper rivets, and in such a position that it is easily visible when there are casings on the boiler.

11. *Testing of Boilers.*—Every new boiler must, on completion, be tested by water pressure.

The test pressure for boilers intended for a working pressure of not more than 5 atmospheres to be double the working pressure, and for boilers intended for a working pressure of more than 5 atmospheres, the test pressure is to be 5 atmospheres above the working pressure.

For boilers where the working pressure is under atmospheric

pressure, the test pressure is to be 1 kilogramme per square centimetre. The plates of the boiler must withstand the test pressure without showing any permanent change of form, and must also remain tight under the pressure.

The boiler is to be regarded as leaky if the water at the highest pressure leaks through in other forms than dewy moisture or pearly drops.

11*a*. When the boilers have been tested and found satisfactory, the copper rivets which fix the brass plate are to be officially stamped, and an impression of this mark is to be inserted on the certificate of test.

12. When boilers have undergone a thorough repair in the boiler shop, or when they have had to be stripped and extensively repaired on board, they must be tested by hydraulic pressure the same as new boilers.

When boilers with internal furnace, and such furnace has been taken out to repair or renew, and when in locomotives the fire-box has been taken out to repair or renew, or when in cylindrical boilers one or more plates have been renewed, the boilers must, on completion of such repairs, be tested by hydraulic pressure as above.

13. *Test Gauge.*—The test pressure is to be registered by an open mercurial gauge, or by the standard pressure gauge provided by the inspecting official.

Each boiler to be tested must be fitted with a connection to suit the standard gauge, and by which the gauge may be applied by the inspecting officer.

Rules for Strength of Boilers.

HAMBURG, 20*th Nov.*, 1888.

1 kgr. = 1 atm. per sq. cm. = 14,223 lbs., English.

TABLE FOR CALCULATING THICKNESS OF PLATES IN SHIP BOILERS.

Section I.—*Shell Plates.*

The strength of cylindrical places is to be calculated according to the following formula :—

$$p = \frac{2\,S\,a\,\delta}{D\,\chi},$$

and therefore

$$\delta = \frac{D\,p\,\chi}{2\,S\,a}.$$

Where p = highest steam pressure in kgr. per sq. cm.

δ = thickness of plates in mm.

D = greatest inside dia. of boiler in mm.

χ = coefficient of safety = 5, but can be reduced to 4·7 when the longitudinal seams are double riveted, and the rivet holes drilled.

a = coefficient of strength of riveting according to following formula :—

a = for strength of plates between holes $\frac{b - c}{b}$.

a = for strength of rivets $\frac{q \, Z \, \chi}{b \, \delta}$.

In this formula :—

b and b^1 = spacing of rivets.
c = dia. of rivet holes.
q = area ,,
δ = thickness of plates.
Z = number of rows of rivets with equal pitch.
χ = 1 for single riveted lap joints.
χ = 1·75 for double riveted lap joints.

The least value of a is to be used in formula I.

In case iron rivets are used for steel plates, the calculation for coefficient a, as also the thickness, must be reckoned for iron plates in the formula.

For welded iron plates, a may be taken as 70 per cent.

S = absolute strength of the material. For wrought iron, 33 kgr. per sq. mm.; for steel, 42 kgr. per sq. mm.

When experience shows that the steel shell plates employed have a greater strength than 42 kgr. per sq. mm, the nett strength may be used in the calculation, nevertheless the steel must not stand more than 48 kgr. per sq. mm., and must have an extension of at least 20 per cent. in 200 mm.

For superheaters S = 28 for iron.
,, ,, S = 35 ,, steel.

Section 2.—Cylindrical Furnaces.

The thickness of plates for cylindrical furnaces must be calculated according to the following formula :—

$$d = R \sqrt{p \times l \times D} + 1 \text{ mm}.$$

d = thickness of plate in mm.
D = outside dia. of furnace in cm.
l = length of furnace in metres between stiffeners.
R = 0·33 when the furnace is completely circular, the longitudinal seam welded, or with double butt straps and double riveted.
R = 0·35 when the furnace is not quite circular, and the longitudinal seam only lapped.

Corrugated Furnaces or Brown's Furnaces.

$$d = \frac{p \times D}{100} + 1 \text{ mm.}$$

In this formula—

d = thickness of plate in mm.
D = mean dia. of furnace in cm.
p = steam pressure in kgr. per sq. cm.

For furnaces of sea-going ships in both cases, add 2 mm. instead of 1 mm.

Section 3.—Screw and Through Stays.

The strength of through and screw stays must not be taken higher than—

500 kgr. per sq. cm. for iron.
600 „ „ „ steel.

Steel stays must not be welded.
In welded iron stays the section must be increased 20 per cent.

Section 4.—Flat Surfaces.

The thickness of stayed flat surfaces are to be calculated according to formula—

$$d = 1{\cdot}5 + e\sqrt{\frac{p}{R}}.$$

In this formula—

d = thickness of plate in mm.
e = greatest spacing of stays in cm.
p = steam pressure in kgr. per sq. cm.
R = coefficient values of which are as follows :—
R = 22 for stays screwed into the plates and riveted.
R = 28 for stays screwed into the plates and fitted with nuts.
R = 30·6 for stays provided with washers inside and outside, the outside washer being three times the dia. of the stay, and ·511 times the thickness of the plate.
R = 34·2 for stays provided with nuts and washers inside and outside, the outside washer being riveted to the plate, the thickness being ·66, the thickness of the plate and the dia. being ·6 of the spacing of the stays.

The outside plate can be reduced 12½ per cent. if of steel.

Section 5.—Dog Stays on top of Combustion Chambers.

The strength of these stays is calculated by the following formula :—

$$d = \frac{p\,(a - e)\,l\,a}{\mathrm{R}\,h^2}.$$

d = thickness of dog in cm.
p = pressure in kgr. per sq. cm.
a = length of dog in cm.
e = pitch of stays in cm.
l = pitch of dogs in cm.
h = depth of „
R = 420 for one stay bolt.
R = 630 for two or three stay bolts.
R = 720 for four stay bolts.

APPENDIX M.

Working Pressure in Lbs. per Square Inch for Boilers.

As allowed by the Rules of Various Authorities.

Steel Shells.	Joint.	Board of Trade.		Lloyd's.	British Corporation.	Hamburg.	Bureau Veritas.
		1891. W. P. lbs. per sq. in.	1893. W. P. lbs. per sq. in.	1893. W. P. lbs. per sq. in.	1893. W. P. lbs. per sq. in.	1888. W. P. lbs. per sq. in.	1894. W. P. lbs. per sq. in.
5·0 in. diameter × $\frac{3}{8}$ in. thick, .	70 p. c.	105·2	116·06	86·3	102·08	109·4	111·3
5·0 ,, × $\frac{1}{2}$,, .	75 ,,	150·4	165·8	138·7	153·1	156·8	163·8
12·0 ,, × $\frac{1}{2}$,, .	80 ,,	70·8	78·48	66·6	72·9	74·15	72·8
12·0 ,, × $\frac{3}{4}$,, .	80 ,,	106·2	117·7	111·1	114·6	111·2	112·4
12·0 ,, × 1 ,, .	80 ,,	141·6	157·0	155·5	156·2	148·3	152·0
12·0 ,, × 1$\frac{1}{4}$,, .	80 ,,	177·0	196·2	200·0	197·9	185·4	191·6
16·0 ,, × 1$\frac{1}{2}$,, .	82 ,,	163·2	181·04	187·9	184·2	170·9	177·7

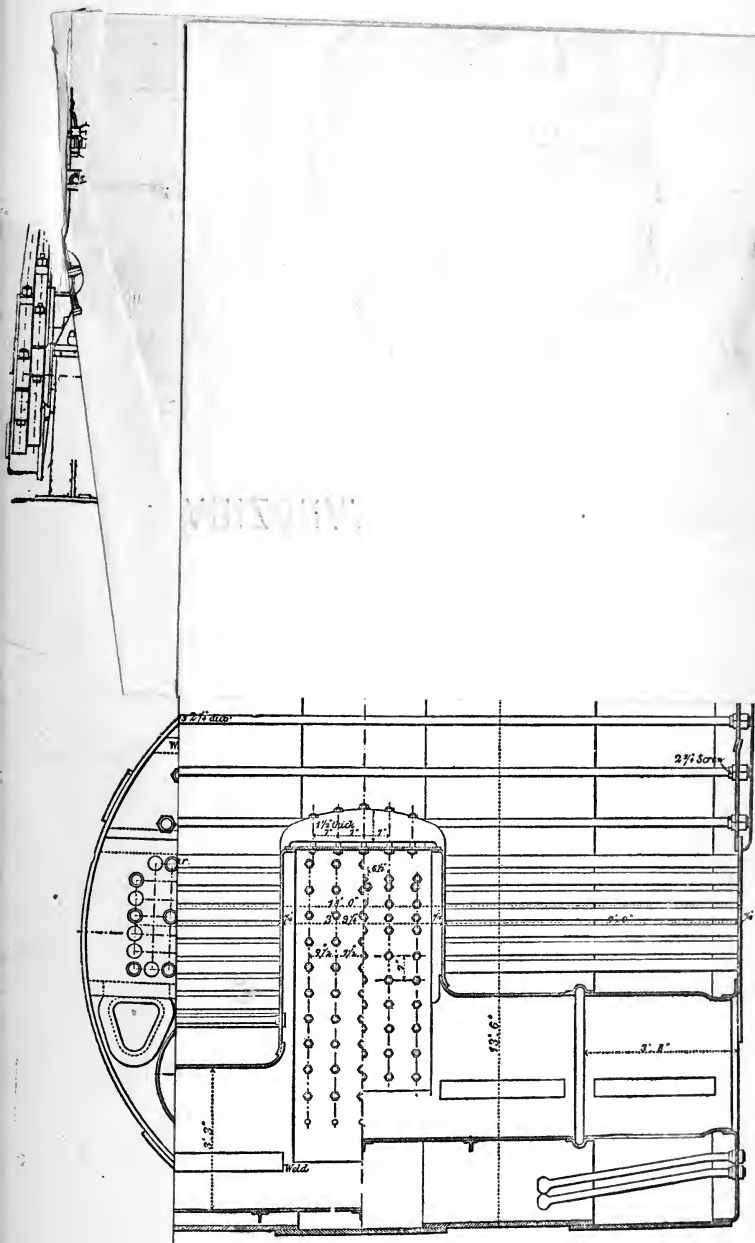
2¾ Screw
1½ thick
13'.6"
3'.8"
3'.3"
Weld

INDEX.

Actual mean pressure as found in practice, 132.
Admiralty, rules for boilers and testing materials, 540-549.
Admiralty bronze, composition of, 483.
,, strength of, 483.
Air-pumps, 244-256.
,, arrangement of, 249, 250.
,, buckets for, 251, 252.
,, double-acting, 247.
,, efficiency of, 247.
,, horizontal, 248.
,, rods, 249.
,, single-acting vertical, 246.
,, size of, 247.
,, valves, 252-255.
Air-vessels, 266.
Alloys, 481.
Aluminium, 481.
Amount of injection water, 230.
Analysis of fuels, 355.
,, Kirk's, 48.
Angle bar-iron, 472.
Annular cylinder engine, 9.
Anthracite coal, 351.
Antimony, 481.
Apparent slip of propellers, 327.
Area of air-pump valves, 256.
,, circulating-pump valves, 259.
,, cooling surface, 235.
,, fire-grate, 378.
,, funnel section, 382.
,, grate in water-tube boilers, 392.
,, injection orifice, 231.
,, paddle-wheel floats, 316, 320.
,, port-opening for steam, 148.
,, safety-valves, 442.
,, screw-propeller blades, 334.
,, section of feed-pipes, 266.
,, ,, steam-pipes, 440.
,, stop- and throttle-valve openings, 147.
,, surface of guide-blocks, 178.
,, thrust surface, 209.
,, total heating surface, 381.
,, tube surface in boiler, 361, 380.
,, tubes in boilers (sectional), 382.
,, valve seats, 256.
Arrangement of cylinders, 106.
Artificial draught, 354.
Ash-hoist, steam, 457.
,, ,, Galloway's patent, 458.
Ash of fuels, 355.
Auxiliary pumps, 347.
,, valves, 153.

Babbit's white metal, 484.
Babcock & Wilcox's water-tube boiler, 396.
Back guides and springs, 279.
,, pressure and compression, 133.
,, rods and trunks to pistons, 176.
Balance-pistons for valves, 279.
Bar-iron, angle, 472.
,, merchant, 471.
,, rolled, 471.
,, specific gravity, strength and weight of, 472.
Bar link, double, 287.
,, single, 287.
Bar links, size of, 287.
Barrel of cylinder, 160.
Bars, wrought-iron, 471.
Basileus' metal, 484.
Beam engine, 3.
Bed-plates and foundations, 218.
Belleville water-tube boiler, 403.
Bending moment, 189.
,, resistance to, 190.
Bessemer steel, manufacture of, 476.
Bevis' patent feathering screw, 340.
Bilge directing-boxes, 263.
,, injection, 232.
,, -pumps, 267.
,, suction piping, 347.
,, -valves, 346.
Bituminous coal, 352.
Blades of a screw propeller, 337.
Blechynden's water-tube boiler, 400.
Blister steel, 475.
Block model, 48.
Blow-off cock, 446.
Blow-through valve, 232.
Board of Trade Rules for boilers, 409, 514-528, 572.
,, ,, safety-valves, 442, 534-539.

Board of Trade Rules for shafts, 212, 501.
,, ,, spare gear, 503.
Body of the piston, 168.
,, ,, rules for, 169, 170.
,, ,, Admiralty rules for, 540-549.
Boiler, allowance for wear of, 420.
,, Babcock & Wilcox's, 396.
,, Belleville water-tube, 403.
,, Blechynden's, 400.
,, Board of Trade rules for, 409, 514-528.
,, British Corporation for Survey of Shipping, rules for, 550.
,, Bureau Veritas, rules for, 555.
,, circumferential seams of, 418.
,, -clothing, Cameron's patent, 450.
,, ,, methods of, 449.
,, Cochrane's, 365.
,, construction of, 350, 409-436.
,, cylindrical, 366, 517.
,, D'Allest's, 396.
,, dimensions, 378.
,, donkey, 512, 524.
,, double-ended, 366, 370.
,, dry-bottom, 363.
,, dry combustion-chamber, 374.
,, Du Temple water-tube, 402.
,, end-plates, 422.
,, -ends, how fitted, 422.
,, feed-valves, 445.
,, Ferguson & Fleming's, 400.
,, furnaces, 424.
,, German Government rules for, 566-571.
,, gunboat, 366, 376.
,, Gurney's water-tube, 391.
,, haystack, 525.
,, Herreshoff's, 395.
,, Holt's, 374.
,, Lloyd's rules for, 409, 504-513.
,, locomotive, 376.
,, ,, double-ended, 377.
,, ,, wet-bottom, 377.
,, longitudinal joints of, 411.
,, man-holes in, 435.
,, material for, 419.
,, Normand, 398.
,, oval, 374.
,, Perkins', 394.
,, rectangular, 363.
,, -seatings and bearers, 453, 456.
,, Seaton's water-tube, 400.
,, -shell, 410.
,, ,, capacity of, 382.
,, ,, cylindrical, 410, 529.
,, single-ended, 366.
Boiler, stays, method of fitting, 394.
,, smoke-box of, 436.
,, stays, strain on, 434.
,, stay-tubes, 433.
,, steam space in, 382.
,, steel, 507, 523, 525-528, 542, 550-555.
,, steel for, 477, 550.
,, Thornycroft's water-tube, 402.
,, -tubes, 393, 433.
,, ,, brass, &c., 433.
,, ,, circulating, 393.
,, ,, sectional area of, 382.
,, tubulous, 388.
,, vertical cylindrical, 376.
,, water spaces of, 435.
,, water-tube, 388-409.
,, Watt's, 396.
,, wet bottom, 363, 517.
,, White's water tube, 402.
,, work, methods of, 419.
,, working pressure for, 506, 511, 572.
,, Yarrow, 400.
Bolts for couplings, 203.
,, ,, cylinder covers, 157.
,, ,, holding down, 154, 455.
,, ,, junk-rings, 170.
,, ,, main bearings, 222.
,, ,, valve rod, 281.
,, of connecting-rods, 184.
,, ,, piston-rod, 182.
Boring holes of cylinders, 153.
,, out the stern post, 451.
Boss of a screw propeller, 336.
Box-boiler, 363-366.
Brass casings of screw-shafts, 208.
,, composition and strength of, 482.
,, naval, 482.
,, Parson's white, 484.
,, tube metal, composition and strength of, 482.
,, yellow, 482.
Brasses of connecting-rod, 185.
,, main bearings, 223.
Breadth of paddle-wheel engines, 59.
Bremme's valve gear, 494, 498.
British Corporation for the Survey and Registry of Shipping, rules for boilers, 550-555.
Bronze, Admiralty, composition and strength of, 483.
,, manganese-, composition and strength of, 483.
,, phosphor-, composition and strength of, 483.
,, Stone's, 484.
Brotherhood's circulating pump, 262.

Brown's patent steam reversing-gear, 457.
Buckets for air-pump, 251, 252.
,, circulating-pump, 258.
Buckley's patent piston-spring, 167.
Built-up crank-shafts, 202.
Bureau Veritas, rules for boilers, 555-565.

Cadman's patent lubricators, 462.
Cameron's patent boiler-clothing, 450.
,, ,, piston-spring, 166.
Cannel coal, 352.
Capacity of boiler-shells, 382.
,, combustion-chambers, 430.
,, jet-condenser, 229.
,, receiver-space, 154.
,, steam-space in boilers, 382.
Caps for connecting-rod brasses, 186.
,, main bearings, 222.
Carbon, heat of combustion of, 353.
Cast iron, mixtures of, 470.
,, qualities of, 468.
,, specific gravity, weight and strength of, 471.
Cast steel, strength of, 471.
Castings in steel, strength of, 479.
Cementing condensers, 244.
Centrifugal pumps, 260.
,, ,, sizes of, 261.
Church's relief-frame, 280.
Circulating-pump, 256.
,, ,, buckets, 258.
,, ,, double-acting, 257.
,, ,, rods, 258.
,, ,, single-acting, 256.
,, ,, size of, 257.
,, ,, valves, 258.
Circumferential seams of boilers, 418.
Clearance, effect of, 120-125.
,, of pistons, 157.
Cleveland iron, strength of, 474.
Clothing and lagging of boilers, 449.
,, ,, cylinders, 158.
Coal, anthracite, 351.
,, bituminous, 352.
,, cannel, 352.
,, composition of, 355.
,, lignite, 352.
Cochrane's boiler, 365.
Coe and Kinghorn's patent air-pump valves, 254.
Coefficient of fineness, 45.
Coke, 355.
Columns, facings and feet for, 154.
,, of vertical engines, 224.
,, strength of, 173.
Combustion, 359.
,, -chambers, 430.
Combustion, rate of, 353, 354.
,, total heat of, 353.
Common paddle-wheel, 315.
,, piston-rings, 164.
,, relief frame, 278.
Communication boxes, 346.
Comparative efficiency of various engines, 93.
Composition of Admiralty-bronze, 483.
,, Babbit's metal, 484.
,, brass, 482.
,, brass-tube metal, 482.
,, bronze, 482.
,, Fenton's white metal, 484.
,, fuel, 355.
,, manganese-bronze, 483.
,, Muntz's metal, 482.
,, naval brass, 482.
,, Parson's white metal, 484.
,, phosphor-bronze, 483.
,, yellow brass, 482.
Compound and expansive engines compared, 82.
,, engine, 77-116.
,, ,, direct expansion, 83.
,, ,, division of the work in, 83.
,, ,, expansion - valves for, 296.
,, ,, fuel consumed in, 89.
,, ,, mean pressure in, 125-132.
,, ,, quadruple, 111.
,, ,, receiver, 81.
,, ,, single-crank, 63.
,, ,, triple-expansion, 84.
,, ,, with four cylinders, 74.
Condenser, common jet, 228.
,, ,, size of, 229.
,, position of, 67.
,, surface, 232.
,, ,, cementing, 244.
,, ,, testing, 244.
,, tube-plates and packings, 237.
,, tubes, 233, 236.
,, ,, spacing of, 240.
Connecting-rod, 182.
,, bolts, 184.
,, brasses, 185.
,, ,, caps for, 186.
,, gudgeons, 186.
Construction of funnels, 437.
,, ordinary pistons, 169.
,, paddle-wheels, 322.
,, smoke-box, 435.

Construction of valve-diagrams, 312.
Consumption of fuel, 89.
,, ,, in expansive and compound engines, 89.
Cooling surface, 235.
,, water, quantity of, 242.
Copper, 479.
,, pipes, thickness of, 454.
,, weight, strength, and specific gravity of, 480.
Corrugated furnaces, 522, 564.
Coupling bolts, 203.
,, of shafts, 203.
,, ,, cross-keys for, 205.
,, ,, drivers for, 205.
,, ,, taper-bolts for, 205.
Coutts and Adamson's patent governor, 460.
Covers of cylinders, 156, 158.
,, valve boxes, 158.
Crank-arms, size of, 194.
,, overhung, 193.
,, pins and journals, surface of, 204.
,, shafts, 190.
,, ,, of paddle engines, 196.
,, ,, of screw engines, 198.
Crosshead and gudgeons of piston-rods, 179.
Cross-keys for couplings, 205.
Curves of indicated horse-power, 53.
,, ,, thrust, 333.
,, of revolutions, 53.
,, of slip, 53.
,, of twisting moments, 191.
Cushioning, effect of, 120-125.
Cylinder cover, studs and bolts of, 157, 160.
,, liner, 149.
,, ratio of capacity of, in compound engines, 91.
,, twin, 9.
Cylinders, annular, 9.
,, arrangement of, 106.
,, barrel of, 160.
,, boring holes of, 153.
,, clothing of, 158.
,, covers of, 156.
,, cover studs and bolts for, 157.
,, diagonal, 155.
,, false faces to, 151.
,, flanges of, 157.
,, horizontal, 155.
,, lagging of, 158.
,, liners for, 149.
,, oscillating, 155.
,, ratio of, as found in actual practice, 112.
Cylinders, small doors of, 158.
,, to calculate the diameter of, 143.
Cylindrical boilers, 366, 517.
,, boiler-shells, 506-509, 529.
,, shells of steel boilers, 507.
,, superheaters, 524, 560.

D'Allest boiler, 396.
Dawe and Holt's patent valve relief frame, 277.
Delta metal, 484.
Density of sea-water, 262.
Designs of engines, variations in, 65.
Details of construction of the ordinary piston, 169.
Diagonal cylinders, 155.
,, engines, 6, 62, 321.
Diagrams for expansion-valves, 307-312.
,, for slide-valves, 300.
,, indicator, 25.
,, showing the effect of "notching-up," 306.
,, Zeuner's 301.
Diameter of air-pump, 248.
,, ,, rods, 249.
,, boiler-tubes, 393.
,, centrifugal pumps, 261.
,, circulating pump, 257.
,, ,, ,, rods, 258,
,, condenser-tubes, 236.
,, connecting-rod, 183.
,, ,, bolts, 182.
,, crank-shafts, 196, 198.
,, cylinder, 143.
,, exhaust-pipes, 149.
,, furnaces, 384.
,, Kingston valve spindles, 343.
,, main-bearing bolts, 223.
,, main steam-pipe, 147.
,, paddle-shafts, 196.
,, paddle-wheels, 320.
,, piston-rod, 170.
,, propeller-shafts, 206.
,, safety-valves, 442.
,, screw propellers, 328, 329.
,, ,, ,, boss, 336.
,, shafts, 212.
,, stop-valves, 440.
,, thrust collars, 210.
,, valve-rods, 281.
Dimensions (*see* Size).
Direct-expansion compound engine, 83.
Directing boxes, 268.
Discharge valves, 349.
Displacement, waves of, 42.

Division of work in a compound engine, 83.
Double-acting air-pump, 247.
,, circulating-pump, 256.
Double-bar links, 287.
,, -butt straps, 415.
,, -crank engine, 65.
,, -ended boilers, 366, 370, 377.
,, -ported valves, 152, 272.
,, riveting, 413.
,, valves, 275.
Drain-cocks, 153, 244.
,, -pipes, 463.
Draught, artificial, 354.
,, chimney, 351.
Drivers for coupling shafts, 205.
"Drop" in the receiver, 83.
Dry-bottom boiler, 363.
,, combustion-chamber, 374.
,, ,, ,, boiler, 374.
,, steam, 119.
Dunlop's patent governor, 459.
Durham and Churchill's velometer, 460.
Du Temple water tube boiler, 402.

Early marine engineers, progress made by, 79.
Eccentric gear, 288.
,, sheaves, 297.
,, straps and rods, 297, 298.
Effect of "drop" in the receiver, 83.
Effects of increase of pressure, 78.
Efficiency of the air-pump, 247.
,, engines, 93.
,, the furnace, 350.
,, the propeller, 326.
Elementary steam-engine, 77.
Energy, calculation of actual, 27.
Engine, annular cylinder, 9.
,, beam, 3.
,, columns of, 224.
,, compound, 77, 81, 82, 83.
,, diagonal, 6, 62.
,, different forms of, 3.
,, double-crank, 65.
,, efficiency of, 28. 93.
,, elementary, 77.
,, expansive, 77, 82.
,, four-cylinder, 65.
,, four-cylinder or tandem, 74.
,, framings, 225.
,, Gorgon, 9.
,, grasshopper, 3.
,, horizontal, 14, 32.
,, ,, direct-acting, 14.
,, inclined direct-acting, 7.
,, inverted direct-acting, 63.
,, oscillating, 5.
Engine, Penn's trunk, 11, 14.
,, quadruple-expansion, 108.
,, return connecting-rod, 11, 17, 60.
,, rotatory, 11.
,, screw, 9, 60, 198.
,, seatings, 451.
,, side-lever, 3.
,, single-crank compound, 63.
,, single-crank single-cylinder, 63.
,, six-cylinder, 76.
,, staying of, 455.
,, steam and ether, 29.
,, steeple, 5, 11.
,, surveys of new, 504.
,, three-crank, 65.
,, three-cylinder, 65. 71.
,, triple-expansion, 94–108.
,, trunk, 11, 61, 176.
,, twin-cylinder, 9.
,, vertical direct-acting, 11.
Entablature of oscillating and steeple engines, 227.
Equivalent twisting moment, 190.
Escape-valves, 153.
Estimated horse-power, 21.
Evaporation, 359.
Evaporative power, 362.
,, ,, of fuels, 355.
Evaporators, 244, 464.
Exhaust passages and pipes, 148.
Expansive engines, 77.
Expansive and compound engines compared, 82.
Expansion joints, 348.
,, piston-valves, 296.
,, -valves, 293, 307-312.
Expected mean pressure in a cylinder, 134-138.
Extra-supply cock, 243.

Facings and feet for columns, 154.
False faces to cylinders, 151.
Feathering-floats, 317.
,, paddle-wheels, diameter of, 320.
,, -screws, 340.
,, ,, Bevis' patent, 340.
Feed-arrangements for boilers, 407.
Feed-heaters, 463.
,, ,, Weir's patent, 463.
,, -pumps, 262.
,, ,, air-vessels, 266.
,, ,, pipes, 266.
,, ,, rods, 267.
,, ,, valves, 265.
,, tank, 267.
,, valves on boilers, 445.

Feed-water, net and gross, 263.
Fenton's white metal, 484.
Ferguson and Fleming's water-tube boiler, 400.
Fineness, coefficient of, 45.
Fire-bars, patent, 439.
,, size of, 438.
Fire-grate, area of, 378.
Fire-places in water-tube boilers, 400.
Fitting machinery into the ship, 451, 455.
Flanges of cylinders, 157.
Flat surfaces, staying of, 160.
,, stiffening of, 160.
Forgings, strength of, 475, 477.
Formulæ for speed and power, 43.
Foundations, 218.
Four-cylinder or tandem engines, 74.
Fox's furnace, 426.
Framing of engines, 225.
Friction, initial, 53, 332.
,, of guides and slides, 33.
,, of pistons, 32.
,, of ports, passages, and pipes, 133.
,, of shaft-journals, 34.
,, of stop-valves, 132.
,, of stuffing-boxes, 33.
,, of valve-motions, 35.
Fuel, analysis of, 355.
,, burnt on the grate, 356.
,, consumption of, 89.
,, evaporative power of, 355.
,, heat of combustion of, 353.
,, kinds of, 351.
,, patent, 352.
,, space occupied by, 355.
,, value of, 352.
Funnel, construction of, 437.
,, size of, 357, 383.
Furnace, circular, 521, 563.
,, connection of, to end plates, 428.
,, corrugated, 522, 564.
,, efficiency of, 350.
,, Fox's, 426.
,, fronts and doors, 438.
,, Holmes', 427.
,, longitudinal joints of, 430.
,, materials for, 429.
,, methods of stiffening, 426.
,, Morison's, 427.
,, plain and corrugated, 522.
,, Purves', 427.

Galloway's patent steam ash hoist, 458.
Gauges, steam- and vacuum-, 461.
German Government rules for boilers for the Mercantile Marine, 566-572.
Girders for flat surfaces, 515, 554.
Glands and stuffing-boxes, 160.
Gorgon engine, 9.
Governors, 458.
,, Coutts and Adamson's, 460.
,, Dunlop's patent, 459.
,, Durham and Churchill's, 460.
,, Meriton's 458.
,, Silver's, 458.
,, Smith and Pinkney's, 459.
,, steam, 460.
,, Westinghouse's, 461.
Grasshopper engine, 3.
Grate area in water-tube boilers, 392.
Gratings in engine- and boiler-rooms, 465.
Gridiron expansion valves, 293.
Gudgeons of connecting-rods, 186.
,, piston-rod ends, 179.
Guide-blocks, surface of, 178.
Guide-plates, 225.
Guides, friction of, 33.
,, for valve-rods, 281.
,, of piston-rods, 177.
Gunboat boilers, 366, 376.
Gun-metal, composition, specific gravity, strength, &c., 482.
Gurney's water-tube boiler, 391.

Hackworth's dynamic valve-gear, 289.
,, valve, 273.
Hand pumps, 268.
Heat, loss of, by engines, 28.
,, units, 353.
Heating surface, 360, 380.
Heat of combustion of fuel, 353.
Henderson's patent furnace-door and fire-bars, 439.
Herreshoff's boiler, 395.
Holler's shafts, 216.
Holmes' furnace, 427.
Holt's boiler, 374.
Horizontal air-pump, 250.
,, cylinders, 155.
,, direct-acting engine, 14.
,, engines, 14, 32.
Horse-power, 21.
Hydrogen, heat of combustion of, 353.
Hydro-kineter, Weir's, 448.
Hydro-motor propeller, 313, 315.

Impermeators, mechanical, 243, 462.
Inclined direct-acting engine, 6.
Increase of pressure, effects of, 78.
Indicated horse-power, 21, 25.
,, ,, calculated from wetted surface, 50.

Indicated horse-power, Kirk's method of calculating, 48.
,, ,, necessary for a given speed, 43.
,, thrust, 331.
Indicator diagrams, 25.
Inertia of moving parts, loss from, 36.
Injection-orifice, area of, 231.
,, -water, amount of, 230.
Inside cut-off valves, 296.
,, lap to slide valves, effect of, 304.
Internal steam pipes, 445.
Inverted direct-acting engine, 63.
Iron bars, manufacture, &c., of, 471.
,, cast, mixtures of, 470.
,, ,, qualities, 468.
,, ,, specific gravity, strength, and weight of, 471.
,, Cleveland, strength of, 469, 474.
,, Durham, 474.
,, forgings, manufacture and strength of, 474.
,, merchant bars, 471.
,, plates, qualities of, 422, 472.
,, rivet, 472.
,, rolled bar, 471.
,, ,, scrap, 472.
,, Scotch, strength of, 469, 474.
,, Staffordshire, specific gravity, strength, and weight of, 473.

Jacket Drains, 463.
Jet-condenser, shape and size of, 229.
Jet-propeller, Ruthven's, 2, 314.
Joy's patent valve-gear, 292.
Junk-ring, 163.
,, bolts, 170.

Kingston valve, 343.
Kirk's method of analysing the form of ships, 48.

Ladders in engine rooms, 465.
Lagging of boilers, 450.
,, cylinders, 158.
Lead of valves, 303.
Lead, specific gravity, strength, and weight of, 481.
Length of paddle-wheel engines, 59.
,, screw engines, 61.
,, stroke of piston in practice, 143.
Lifting screws, 340.
Lignite, 352.
Liners for cylinders, 149.
Link, effect of "notching-up" the, 305.
,, -motions, 283.
Liquefaction during expansion, 133.
Lloyd's rules for machinery and boilers, 409, 504-513, 572.
,, ,, shafts, 214.
Lock-bolts of pistons, 170.
Locomotive boiler, 376.
,, slide-valve, 271.
Longitudinal joints of boilers, 409.
,, ,, furnaces, 430.
Long and short D-valves, 270.
Loss from the engine-pumps, 36.
,, ,, friction at the shaft journals, 34.
,, ,, inertia of the moving parts, 36.
,, ,, mechanical defects, 37.
,, ,, physical causes, 37.
,, of energy from engines, 37.
,, of heat from engines, 28.
,, of pressure from wire-drawing of steam and other causes, 132.
Lubricators, 462.

Machinery, fitting, 451, 455.
,, Lloyd's rules for, 505.
,, space occupied by, 58, 61.
,, weight of, 485-489.
MacLaine's patent piston, 168.
Main bearings, 219.
,, ,, bolts, 222.
,, ,, brasses, 223.
,, ,, caps, 222.
,, steam-pipe, 146.
Manganese-bronze, composition and strength of, 483.
Man-holes in boilers, 435.
,, condensers, 243.
Manufacture of Bessemer steel, 476.
,, iron forgings, 474.
,, Siemens-Martin steel, 476.
,, steel, 475.
,, wrought iron, 471.
,, wrought-iron bars, 471.
Marine boilers, particulars of, 383-388.
,, engines, comparative efficiency of, 93.
,, ,, requisites of, 85.
,, ,, trials of, 113.
,, ,, various kinds of, 86-91.
Marshall's patent valve-gear, 284.
Martin's patent fire-bars, 439.
Materials, Admiralty rules for, 544.
,, for boilers, 419.
,, ,, furnaces, 429.
,, ,, screw-blades, 339.
,, used by the marine engineer, 468-484.

Mather and Platt's patent piston-spring, 167.
Mean pressure, 25, 117.
,, as in actual practice, 132.
,, graphic method for finding, 119.
,, in compound engines, 125-132.
Mean pressure, in triple-expansion engines, 102.
Meriton's governor, 458.
Metal, Babbit's, 484.
,, Basileus', 484.
,, brass tube, 484.
,, Fenton's, 484.
,, Muntz's, 482.
,, Richard's plastic, 484.
Metallic valves, 254.
Method's of boiler work, 419.
,, stiffening furnaces, 426.
Mixtures of cast iron, 470.
Momentum, 42.
,, of moving parts, 193.
Morison's furnace, 427.
Morton's reversing valve-gear, 499.
Motion of the piston, diagram of, 299.
Mud-boxes, 268.
,, holes in condensers, 243.

Negative slip of screw propeller, 327.
Nominal horse-power, rules for, 22.
Normal mean thrust, 209.
Normand water-tube boiler, 398.
"Notching up" the link, effect of, 305.

Opening of ports to steam, 148.
Origin of the compound engine, 77.
Oscillating cylinders, 155.
,, engine, 5.
,, ,, entablature of, 227.
Outer bearings for screw-shafts, 207.
Outside cut-off valves, 294.
Oval boilers, 370.
Overhung crank, 193.

Packings for condenser-tubes, 237.
Paddle-floats, 316.
,, -shafts, 196.
Paddle-wheel, 1.
,, common, 315.
,, engines, breadth and length of, 59.
,, feathering, 317.
,, ,, diameter of, 320.
,, floats, area of, 316.
,, framework of, 322.
,, radius rods, 319.
,, rims of, 322.
Parson's white brass, 484.
Passage of circulating water, 243.
Passages and pipes for exhaust, 148.
Patent fuels, composition, &c., 352.
Peat, composition, &c., of, 355.
Pedestals for tunnel-shafting, 453.
Penn's trunk engine, 11, 14.
Perkins' boiler, 394.
Petroleum, 355.
"Pet" valves, 267.
Phosphor-bronze, composition and strength of, 483.
Piston, 163-172.
,, back rods and trunks for, 176.
,, balance, 279.
,, body of the, 168.
,, Buckley's patent spring, 167.
,, clearance of, 157.
,, details of construction, 169.
,, diagram of the motion of, 299.
,, expansion-valves, 296.
,, friction of, 32.
,, length of stroke of, 143.
,, MacLaine's patent, 168.
,, Mather and Platt's patent spring, 167.
,, Prior's patent spring, 167.
,, Qualter and Hall's patent spring, 167.
,, rings, Cameron's, 166.
,, ,, common, 164.
,, ,, Ramsbottom's, 164.
,, -rod, 172.
,, ,, crossheads and gudgeons, 179.
,, ,, diameter of, 172.
,, ,, ends, 174.
,, ,, guides, 177.
,, Rowan's patent, 168.
,, solid packings for, 170.
,, speed of, 138.
,, -springs, 166.
,, ,, Cameron's patent, 166.
,, -valves, 151, 274.
Pitch of screw propellers, 329.
,, studs in cylinder covers, 160.
Planimeter, 27.
Plate-iron, qualities of, 422, 472.
Plates of boiler-ends, 422.
,, compressive strain on, 516.
,, tenacity of, 411.
Platforms in engine- and boiler-rooms, 465.
Ports, friction in, 133.
,, width of, 151.
Position of the suspension-pin of link-motions, 285.
Power, evaporative, 354.
,, ,, of fuel, 355.

Pressure, working, for boilers, 506-511, 514.
Prior's patent piston-spring, 167.
Progress made by early marine engineers, 79.
Progressive trials, 52.
Propellers, action of, 312.
,, apparent slip of, 327.
,, hydro-motor, 313, 315.
,, jet, 314.
,, negative slip of, 327.
,, screw, 325-349.
,, shafts for, 206.
,, thrust of, 209.
Puddled steel, 476.
Pumps, air-, 244.
,, auxiliary, 347.
,, bilge-, 267.
,, Brotherhood's, 262.
,, centrifugal, 260.
,, circulating-, 256.
,, feed-, 262.
,, hand-, 268.
,, position of, 68, 69.
,, rods for air-, 249.
,, rotary, 259.
,, sanitary, 268.
Purves' furnace, 427.

Quadruple compound engine, 111.
,, expansion engines, 108.
Qualities of cast iron, 468.
,, plate iron, 422.
Qualter and Hall's patent piston, 167.
Quantity of cooling water, 242.
,, fuel burnt in the grate, 356.

Ramsbottom's piston-rings, 164.
Rankine's graphic method of ascertaining mean pressure, 119.
,, method of calculating the resistance of a ship, 46.
Ratio of the cylinder capacity of a compound engine, 91.
Receiver compound engine, 81.
,, of the compound engine, 81, 82.
,, ,, capacity of, 154.
,, space, 154.
Rectangular boilers, 363.
Relief-frames for slide-valves, 275-278.
,, ,, Dawe and Holt's patent, 277.
,, -valves for cylinders, 153.
,, ,, feed-pumps, 265.
Resistance of ships, 41.
,, to bending, 190.
,, to twisting, 187.
Return connecting-rod engine, 11, 17, 60.
Reversing motion of ships, 2.
,, and starting engines, 456.
,, -gear, 298.
,, ,, Brown's patent, 457.
,, steam gear for, 457.
Revolutions, curve of, 53.
,, of engines, 141.
Richard's plastic metal, 484.
Riveted joints, rules for, 530-533.
Riveting, 411.
,, double, 413.
,, single, 411.
,, treble, 413.
Rods, air-pump, 249.
,, circulating-pump, 258.
,, eccentric, 298.
,, feed-pump, 267.
Rolled bar iron, 471.
,, scrap iron, 472.
Rotary pumps, 259.
Rotatory engines, 11.
Rowan's patent piston, 168.
Rules for boilers, Board of Trade, 409, 514-528.
,, ,, British Corporation for Survey and Registry of Shipping, 550-555.
,, ,, Lloyd's, 409, 504-513.
,, estimated horse-power, 22.
,, nominal horse-power, 22.
,, riveted joints, 530-533.
,, safety-valves, Board of Trade, 442, 534-539.
,, shafts, Board of Trade, 212, 501.
,, ,, Lloyd's, 214.
,, spare gear, Board of Trade, 503.
,, stays, 434.
,, strength of cylindrical shells of boilers, 506-509, 520.
,, ,, of the German Government for the Mercantile Marine, 566.
Ruthven's jet-propeller, 2, 314.

Safety-collars for expansion-joints, 349.
,, -rings for piston bolts, 170.
,, -valves, Board of Trade rules for, 442.
,, ,, construction of, 441.
,, ,, list of makers of spring, 541.

Safety-valves, Seaton & Cameron's, 444.
,, ,, sentinel, 448.
,, ,, size of, 442.
Sanitary pump, 268.
Scotch iron, strength of, 469, 474.
Screw, 1.
,, blades, area and thickness of, 335.
,, ,, material for, 339.
,, engines, 9, 60.
,, ,, crank-shaft of, 198.
,, ,, length of, 61.
,, propeller, blades of, 325, 337.
,, ,, boss of, 336.
,, ,, diameter of, 328, 329.
,, ,, feathering, 340.
,, ,, lifting, 340.
,, ,, pitch of, 329.
,, ,, slip of, 327.
,, ,, thrust of, 329, 331.
,, shafts, brass casings of, 208.
,, ,, diameter of, 212.
,, ,, ends of, 207.
,, ,, outer bearing for, 207.
Scum-cock, 447.
Sea-cocks and valves, 343-346.
Sea performance of ships, 57.
Seatings for boilers, 453, 456.
,, ,, engines, 451.
,, ,, thrust block, 453.
Seaton's patent locomotive boiler, 377.
,, water-tube boiler, 400.
Seaton and Cameron's patent safety-valve, 444.
Seaward's valves, 271.
Sea-water, density of, 262.
Sell's patent valve-gear, 292.
Sentinel safety-valves, 448.
Separators, 449.
Shafting, 186-217.
Shaft-journal, friction of, 34.
,, ,, surface of, 204.
Shafts, Board of Trade rules for, 212, 501.
,, couplings of, 203.
,, crank, 190.
,, hollow, 216.
,, Lloyd's rules for, 214.
,, of paddle engines, 196.
,, practical rules for diameter of, 212.
,, propeller, 206.
,, thrust, 209.
Shear-steel, 475.
Ships, Kirk's method of analysing the form of, 48.
,, resistance of, 41.
,, ,, Rankine's method, 46.
Side-lever engine, 3.
Siemens-Martin steel, manufacture of, 476.
Sight feed lubricator, 462.
Silver's governor, 458.
Simple and compound engines, consumption of fuel in, 89.
Single-acting air-pump, 246.
,, ,, circulating pump, 256.
,, bar link, 287.
,, -crank compound engine, 63.
,, ,, single-cylinder engine, 63.
,, -eccentric gears, 288.
,, -ended boilers, 366.
,, -riveting, 411.
Six-cylinder engines, 76.
Size of air-pump, 247.
,, ,, buckets, 251.
,, auxiliary valves, 153.
,, bar-links, 287.
,, bilge-pumps, 267.
,, boilers, 378.
,, boiler-tubes, 393.
,, caps for main-bearings, 222.
,, centrifugal pumps, 261.
,, circulating pumps, 257.
,, combustion-chambers, 430.
,, connecting-rods, 182.
,, coupling-bolts, 203.
,, crank-shafts, 190.
,, cylinders, 143.
,, drain-cocks, 153.
,, eccentric-sheaves, 297.
,, eccentric-straps, 298.
,, entablature, 227.
,, escape valves, 153.
,, exhaust-pipes, 148.
,, feed-pumps, 262.
,, feed-valves, 445.
,, fire-bars, 438.
,, fire-grate, 378.
,, funnels, 357.
,, furnaces, 424.
,, injection-orifice, 231.
,, jet-condenser, 229.
,, main steam pipe, 146.
,, man-holes, 435.
,, paddle-floats, 316.
,, paddle-shafts, 196.
,, paddle-wheel engines, 59.
,, piston-rods, 172.
,, safety-valves, 442.
,, screw blades, 335.
,, screw propeller, 328, 329.
,, screw shafts, 212.
,, shafts, 212.
,, slot links, 286.
,, steam-ports, 147, 151.

Size of stop-valves, 439.
,, thrust-collars, 210.
,, tunnel shafts, 215.
Skin resistance, 42.
Slides, friction of, 33.
Slip, apparent, 327.
,, curve of, 53.
,, negative, 327.
Slot-links, 285.
Smith and Pinkney's patent governor, 459.
Smoke-box, construction of, 436.
Snifting-valve, 231.
Sole plate, 218.
Solid packings for pistons, 172.
Space occupied by fuel, 355.
,, ,, machinery, 58, 61.
Spacing of boiler-stays, 394.
,, condenser-tubes, 240.
,, receivers, 154.
Spare-gear, Board of Trade rules for, 503.
Specific gravity of aluminium, 481.
,, ,, bar iron, 472.
,, ,, bronze, 483.
,, ,, cast iron, 471.
,, ,, copper, 480.
,, ,, gun-metal, 483.
,, ,, iron-forgings, 475.
,, ,, lead, 481.
,, ,, Muntz's metal, 482.
,, ,, Staffordshire iron, 474.
,, ,, tin, 480.
,, ,, Yorkshire iron, 473.
,, ,, zinc, 481.
Speed curves, 52.
,, formulæ, 43.
,, of piston, 138.
Spelter, specific gravity, strength, and weight of, 481.
Springs for pistons, 166.
Starting and reversing engines, 456.
Staying of engines, 455.
Stays, 394, 434.
Steam and ether engine, 29.
,, ash hoists, 457.
,, drums, 394.
,, dry, 119.
,, engines, elementary, 77.
,, expansion of, 117.
,, friction of, 132.
,, gauges, 448, 461.
,, gears for reversing, 457.
,, governors, 460.
,, high-pressure, 30.
,, jackets, 152.
,, liquefaction of, during expansion, 133.
Steam, mean pressure of, 117.
,, passages, 147.
,, pipes, 146, 445.
,, ports, 147, 151.
,, space in boiler, 382.
,, superheated, 30, 119.
,, turning-gear, 457.
,, used expansively, 118.
,, -whistle, 449.
,, wire drawing of, 132.
Steamships, sea performance of, 57.
,, trials of, 54.
Steel, Bessemer, 476.
,, blister, 475.
,, boiler, 477.
,, cast, 475.
,, castings, 478.
,, forgings, 477.
,, makers of, 528.
,, puddled, 476.
,, Siemens-Martin, 476.
,, stays, 507, 523.
,, Whitworth, 477.
Steeple-engine, 5, 11.
,, entablature of, 227.
Stern bush, 207, 208.
,, -post, boring out the, 451.
,, -tube, 208.
Stiffening of flat surfaces, 160.
Stone's bronze, 484.
,, white bronze, 484.
Stop-valves, friction in, 132.
,, on boiler, size of, 439.
Stop-and throttle-valves, area through, 147.
Strain on boiler-stays, 434.
Strength of Admiralty-bronze, 483.
,, aluminium, 481.
,, bar iron, 472.
,, Basileus' metal, 484.
,, boiler-steel, 477.
,, brass, 482.
,, ,, -tube metal, 482.
,, bronze, 483.
,, cast iron, 471.
,, ,, steel, 479.
,, Cleveland iron, 469, 474.
,, columns, 173.
,, copper, 480.
,, delta metal, 484,
,, forgings, 477.
,, lead, 481.
,, manganese-bronze, 483.
,, Muntz's metal, 482.
,, naval brass, 482.
,, phosphor-bronze, 483.
,, Scotch iron, 469, 474.
,, Staffordshire iron, 473.
,, steel castings, 478.

Strength of steel forgings, 477.
,, tin, 480.
,, Whitworth steel, 477.
,, Yorkshire iron, 473.
,, zinc, 481.
Stroke of piston, length of, 143.
Studs for cylinder-covers, 157, 160.
Stuffing-boxes, 160.
,, friction of, 33.
Sulphur, heat of combustion of, 353.
Superheater, 524.
Surface condenser, 232.
,, cooling, 235.
,, of crank-pins and journals, 204.
,, of guide blocks, 178.
,, heating, 360, 380.
,, total heating-, 381.
,, of tubes in boilers, 361, 380.
Surveyor, duties of, 514.
Suspension pin of link-motion, position of, 285.

Tandem engines, 74.
Tank for feed-pump, 267.
Taper bolts for couplings, 205.
Tenacity of plates, 411.
Testing a condenser, 244.
Thickness of boiler-end plates, 423.
,, boiler-shell, rules for, 506.
,, copper pipes, 454.
,, ,, -tubes, 432.
,, screw-propeller blades, 335.
Thomson's patent air-pump valves, 255.
Thornycroft's water-tube boiler, 402.
Thom's patent piston-valve, 255.
Three-cylinder engines, 65, 71.
Throttle-valves, area through, 147.
Thrust-block, 211.
,, ,, seating, 453.
,, -collars, 210.
,, indicated, 331.
,, normal mean, 209.
,, of a propeller, 204.
,, ,, screw propeller, 329.
,, shaft, 209.
Tin, specific gravity, strength and weight of, 480.
Total heating surface, 381.
Travel of valve, 301.
Treble-ported valves, 272.
,, -riveted joints, 413.
Trials of marine engines, 113.
,, steam vessels, 54.
Trial trips, value of, 41.
Trick's valve, 271.
Triple-expansion engine, compound, 94.
,, ,, ordinary, 96-108.
Trunk engines, 11, 14, 61, 176.
Tubes, boiler, 393, 417.
,, ,, sectional area of, 382.
,, ,, stay, 433.
,, circulating, 393.
,, condenser, 233, 236.
,, plates for condenser, 237.
,, spacing of, 240.
,, steam side and water side of, 239.
,, stern, 208.
,, surface of, in boilers, 361, 380.
Tubulous boilers, 388.
Tunnel-shafting, pedestals for, 453.
,, size of, 215.
Turning-gear, steam, 457.
Twin cylinders, 9.
Twisting moments, 187.
,, ,, curve of, 191.
,, ,, equivalent, 190.
,, resistance to, 187.

Uptakes, construction of, 437.

Vacuum gauges, 461.
Value of fuel, 352.
,, trial trips, 41.
Valve boxes, 265.
,, -box covers, 158.
,, diagrams, 299-312.
Valves, air-pump, 252-255.
,, auxiliary, 153.
,, bilge, 346.
,, blow-through, 232.
,, circulating pump, 258.
,, Coe and Kinghorn's patent, 254.
,, discharge, 345.
,, double, 275.
,, ,, -ported, 152, 272.
,, escape, 153.
,, expansion, 293-297, 307-312.
,, feed, 445.
,, feed-pump, 265.
,, Hackworth's, 273.
,, inside cut-off, 296.
,, Kingston, 343.
,, lead of, 303.
,, locomotive slide-, 271.
,, long and short D, 270.
,, metallic, 254.
,, outside cut-off, 294.
,, pet-, 267.
,, piston-, 151, 274.
,, ,, expansion-, 296.
,, ,, slide-, 274.
,, Seaward's 271.
,, slide-, 270-271.
,, snifting-, 231.
,, Thom's patent, 255.

Valves, travel of, 302.
,, treble-ported, 272.
,, Trick's, 271.
,, vulcanite, 254.
,, wooden, 254.
,, Zeuner's diagrams for, 301.
Valve-gears, Bremme's, 494-498.
,, Hackworth's dynamic, 289.
,, Joy's, 292.
,, link-motion, 283.
,, Marshall's, 284.
,, Morton's reversing, 499.
,, Sell's, 292.
Valve motions, friction of, 35.
,, relief frames, 277.
,, -rod bolts, 281.
,, ,, guides, 281.
,, -rods or spindles, 279.
,, -seats, area through, 256.
Variations in design of engines, 65.
Velometer, Durham and Churchill's, 460.
Vertical cylindrical boiler, 376.
,, direct-acting engine, 11.
,, engines, columns for, 224.
Vulcanite valves, 254.

Water, passage of, in condensers, 243.
,, -gauges, 447.
,, -lines, 45.
,, quantity of cooling, 242.
,, resistance of, to passage of ships, 42.
,, service, 348.
,, space in boilers, 435.
,, -tube boilers, 388.
Watt's patent boiler, 396.
Waves of displacement, 42.
Weight of aluminium, 481.
,, bar-iron, 472.
,, bronze, 483.
,, cast iron, 471.
Weight of copper, 480.
,, gun-metal, 482.
,, iron forgings, 475.
,, lead, 481.
,, machinery, 485-489.
,, Muntz's metal, 482.
,, Staffordshire iron, 474.
,, tin, 480.
,, Yorkshire iron, 473.
,, zinc, 481.
Weir's evaporator, 466.
,, feed-heaters, 463.
,, hydro-kineter, 448.
Westinghouse's patent governor, 461.
Wet-bottom boiler, 363, 377, 517.
Wetted surface as a guide to indicated horse-power, 50, 57.
,, Kirk's method of calculating, 49.
White brass, Parson's, 484.
,, bronze, Stone's, 484.
,, metal, Babbit's, 484.
,, ,, Fenton's, 484.
White's water-tube boiler, 402.
Whitworth's steel, strength of, 477.
Wire-drawing of steam at cut-off, 132.
Wooden valve, 254.
Woods, 355.
Work, division of, in compound engine, 83.
Wrought-iron bars, 471.
,, manufacture of, 471.

Yarrow water-tube boiler, 400.
Yellow brass, strength and composition of, 482.
Yorkshire iron, strength, specific gravity, and weight of, 473.

Zeuner's valve diagrams, 301.
Zinc or spelter, 480.
,, strength, specific gravity, and weight of, 481.

BELL AND BAIN, LIMITED, PRINTERS, GLASGOW.

BINDING LIST AUG 15 1941

TE
S

Seaton, Albert Edward
A manual of marine engineering.

P&A Sci.

PLEASE DO NOT REMOVE
CARDS OR SLIPS FROM THIS POCKET

UNIVERSITY OF TORONTO LIBRARY